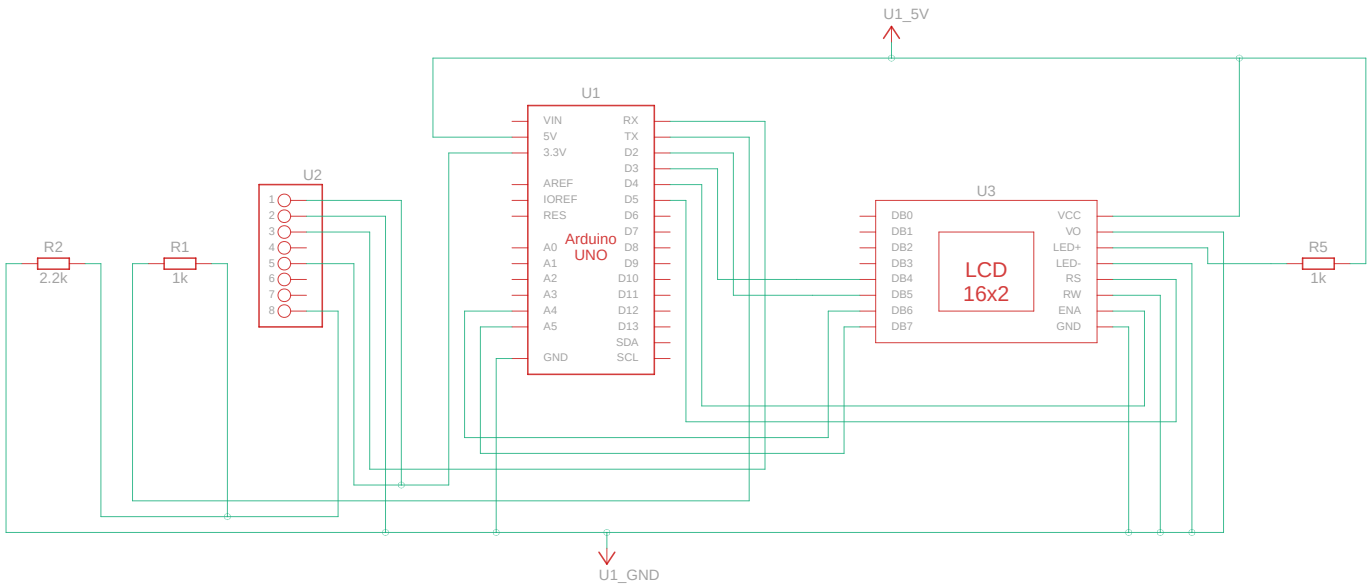

Made with Tinkercad®

Title: Copy of Baggage Tracking System

Date: 3/28/2024, 1:13:28 AM

Sheet: 1/1