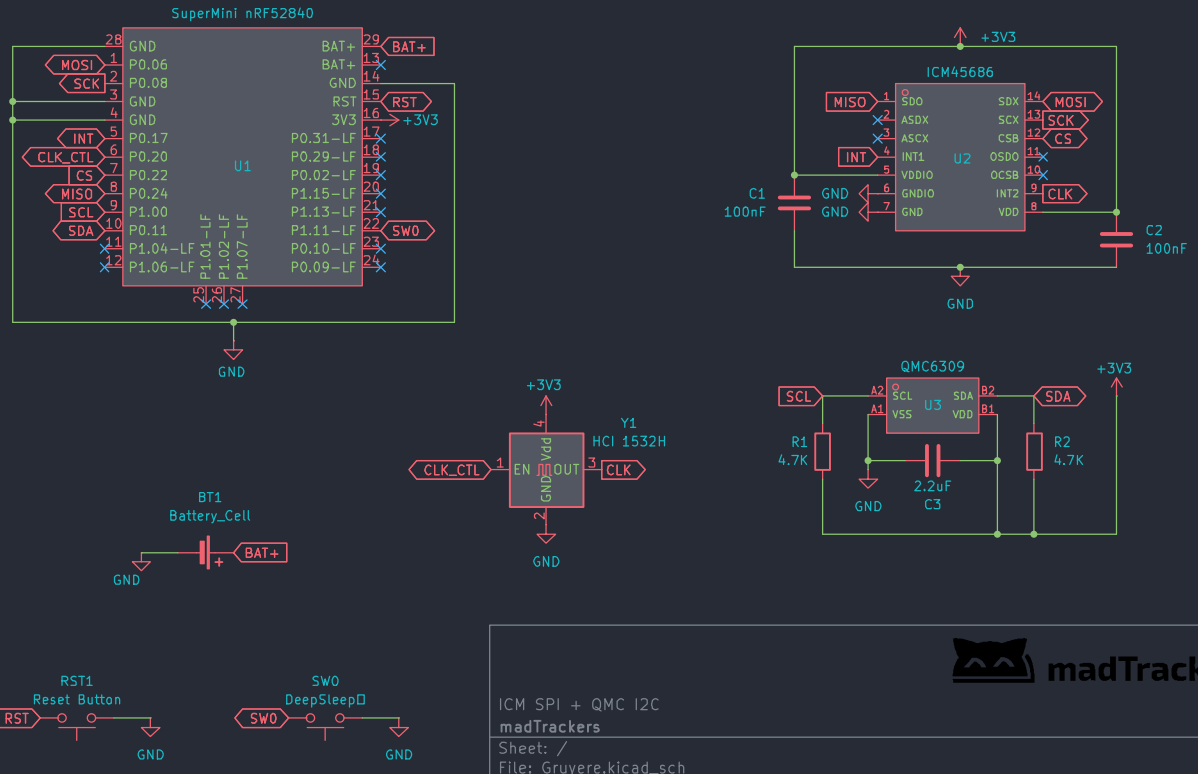

madTrackers

ICM SPI + QMC I2C

madTrackers

Sheet: /

File: Gruyere.kicad_sch

Title: Smol SlimeVR-Compatible Trackers

Size: A5	Date: 2025-05-20	Rev: v1.2
KiCad E.D.A. 9.0.2		Id: 1/1