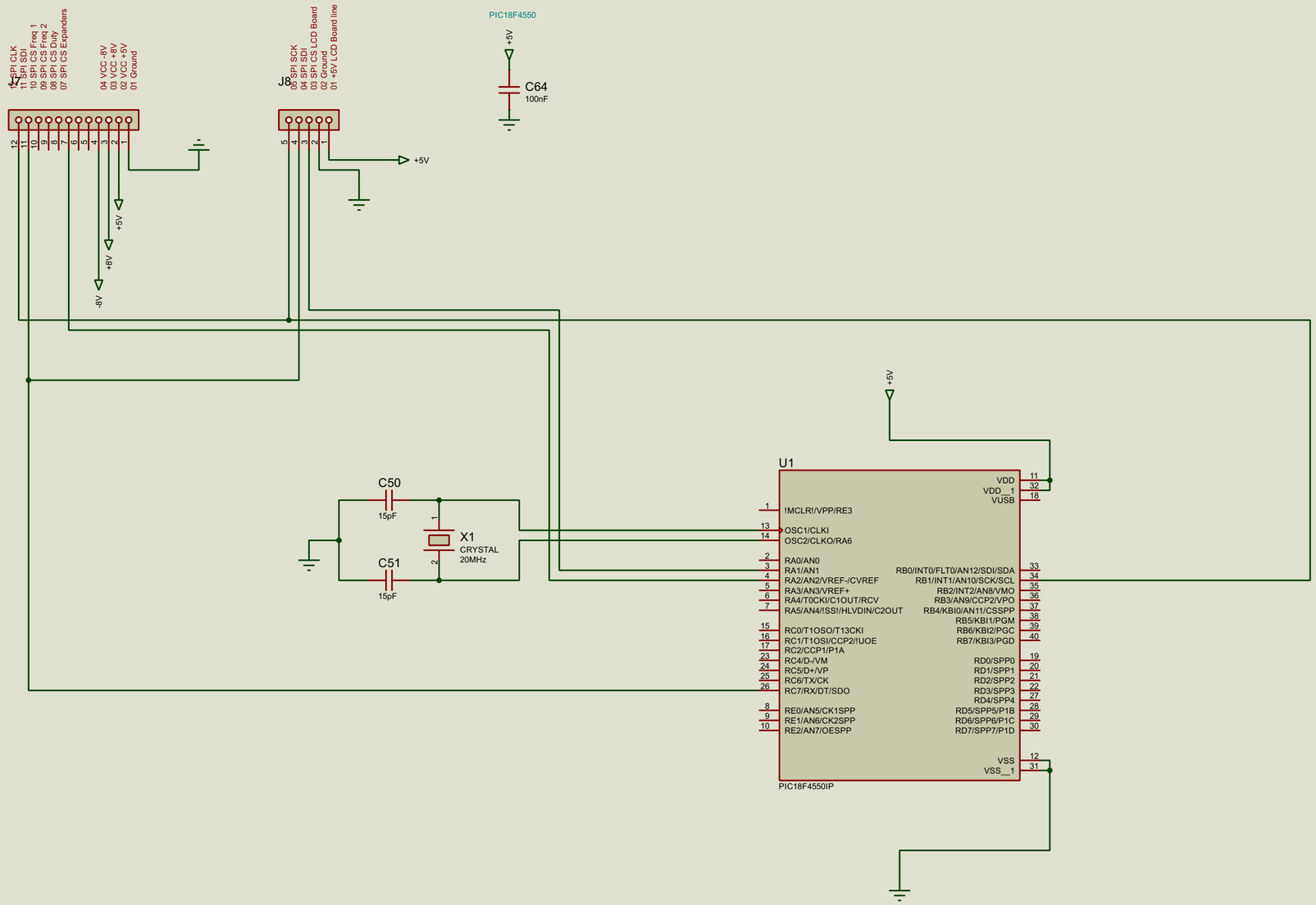

FILE NAME:	Alfonso_ICL8038.pdsprj	DATE: 12/04/2023	
DESIGN TITLE:	Digital Controller USB		PAGE: 1 of 5
PATH:	Alfonso_ICL8038.pdsprj		
BY:	Emiliano Mazza 2022	REV: 1.0.0	TIME: 00:53:12

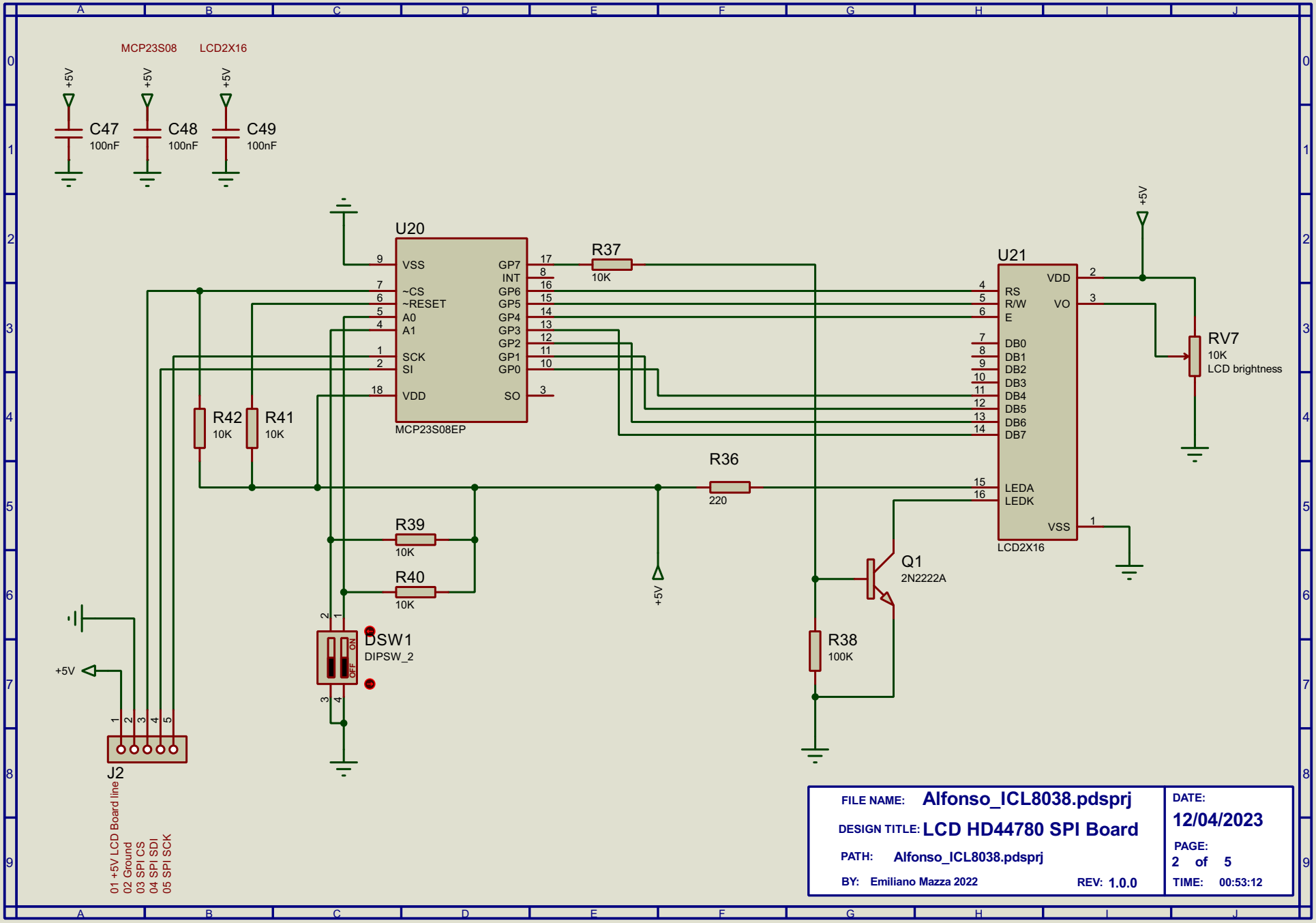
MCP23S08
LCD2X16
+5V
C47
100nF
C48
100nF
C49
100nF
U20
VSS
~CS
~RESET
A0
A1
SCK
SI
VDD
GP7
INT
GP6
GP5
GP4
GP3
GP2
GP1
GP0
SO
MCP23S08EP
R37
10K
R42
10K
R41
10K
R36
220
R39
10K
R40
10K
DSW1
DIPSW_2
ON
OFF
J2
01 +5V LCD Board line
02 Ground
03 SPI CS
04 SPI SDI
05 SPI SCK
U21
RS
R/W
E
DB0
DB1
DB2
DB3
DB4
DB5
DB6
DB7
LEDA
LEDK
VDD
VO
VSS
LCD2X16
RV7
10K
LCD brightness
Q1
2N2222A
R38
100K
FILE NAME: Alfonso_ICL8038.pdsprj
DESIGN TITLE: LCD HD44780 SPI Board
PATH: Alfonso_ICL8038.pdsprj
BY: Emiliano Mazza 2022
REV: 1.0.0
DATE: 12/04/2023
PAGE: 2 of 5
TIME: 00:53:12

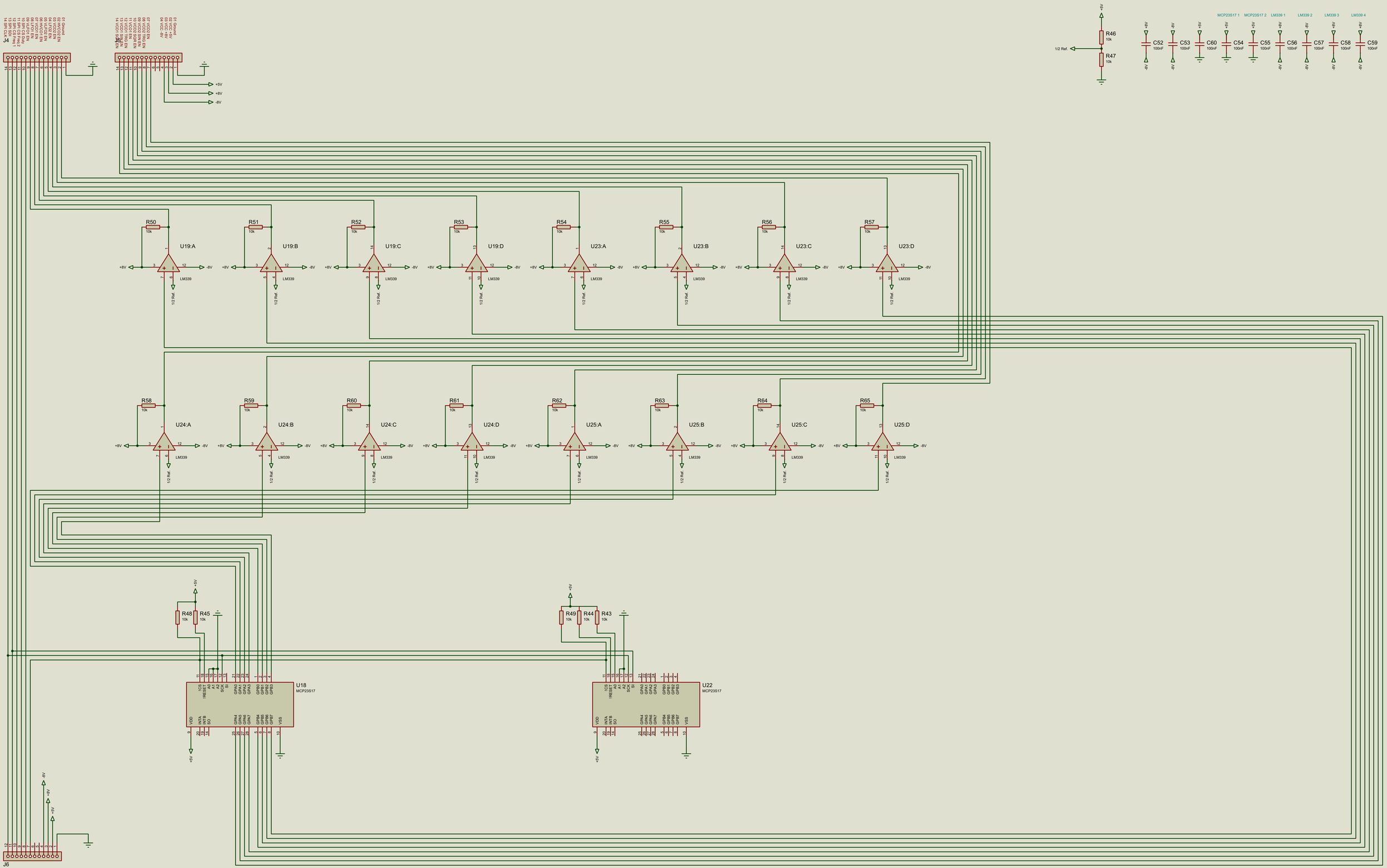

FILE NAME:	Alfonso_ICL8038.pdsprj	DATE: 12/04/2023	
DESIGN TITLE:	I/O Control Board Dual VCO		PAGE: 3 of 5
PATH:	Alfonso_ICL8038.pdsprj		
BY:	Emiliano Mazza 2022	REV: 1.0.0	TIME: 00:53:12

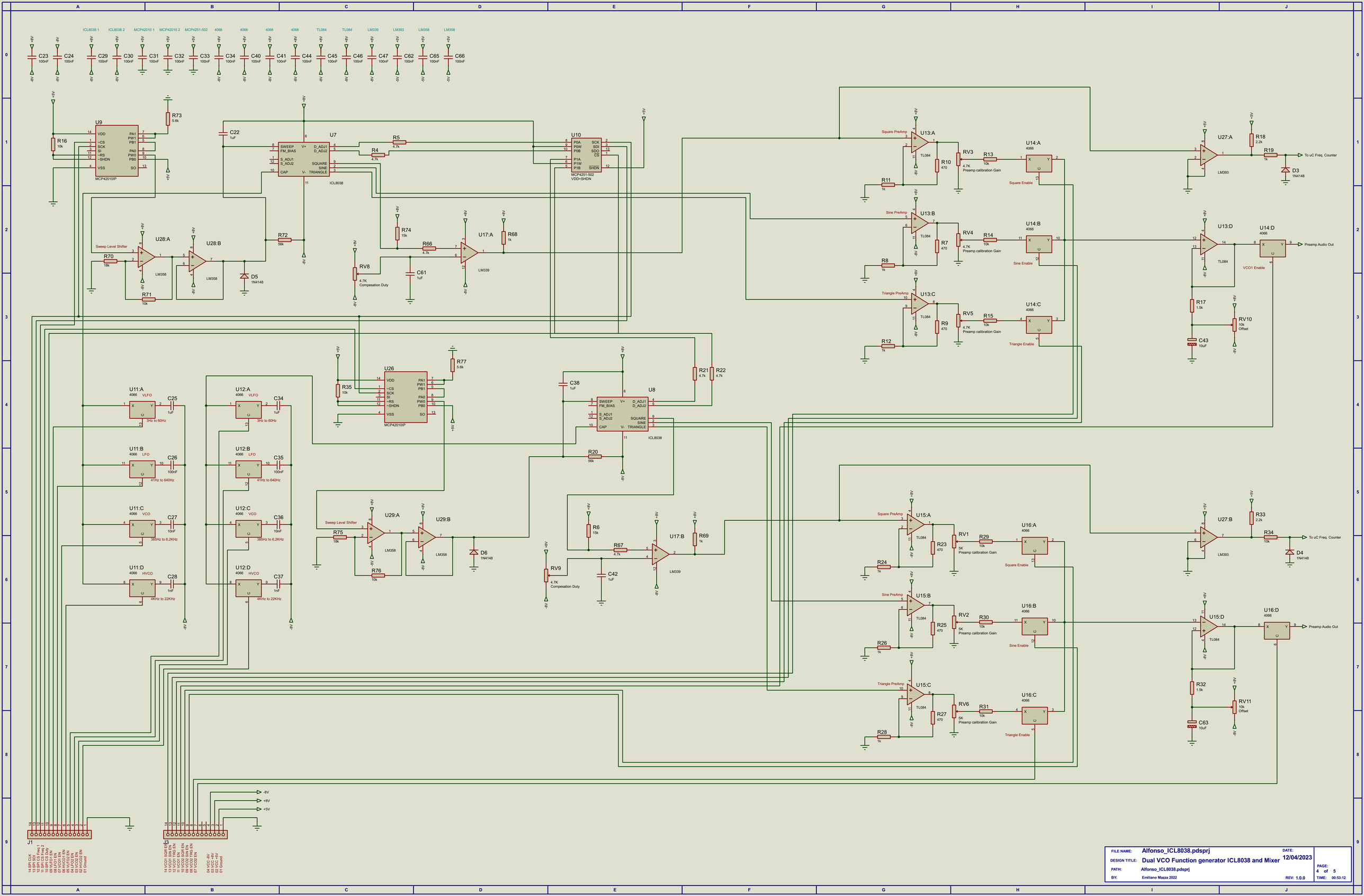
ICL8038 1
ICL8038 2
MCP42010 1
MCP42010 2
MCP4251-502
4066
TL084
LM339
LM393
LM358
U9
MCP42010IP
U7
ICL8038
U10
MCP4251-502
VDD=SHDN
U26
U8
U28:A
U28:B
U17:A
U17:B
U29:A
U29:B
U11:A
U11:B
U11:C
U11:D
U12:A
U12:B
U12:C
U12:D
U13:A
U13:B
U13:C
U13:D
U14:A
U14:B
U14:C
U14:D
U15:A
U15:B
U15:C
U15:D
U16:A
U16:B
U16:C
U16:D
U27:A
U27:B
Sweep Level Shifter
Square PreAmp
Sine PreAmp
Triangle PreAmp
Square Enable
Sine Enable
Triangle Enable
VCO1 Enable
Preamp calibration Gain
Compesation Duty
To uC Freq. Counter
Preamp Audio Out
3Hz to 60Hz
41Hz to 640Hz
385Hz to 6,2KHz
4KHz to 22KHz
VLFO
LFO
VCO
HVCO
J1
J3
FILE NAME: Alfonso_ICL8038.pdsprj
DESIGN TITLE: Dual VCO Function generator ICL8038 and Mixer
PATH: Alfonso_ICL8038.pdsprj
BY: Emiliano Mazza 2022
DATE: 12/04/2023
REV: 1.0.0
PAGE: 4 of 5
TIME: 00:53:12

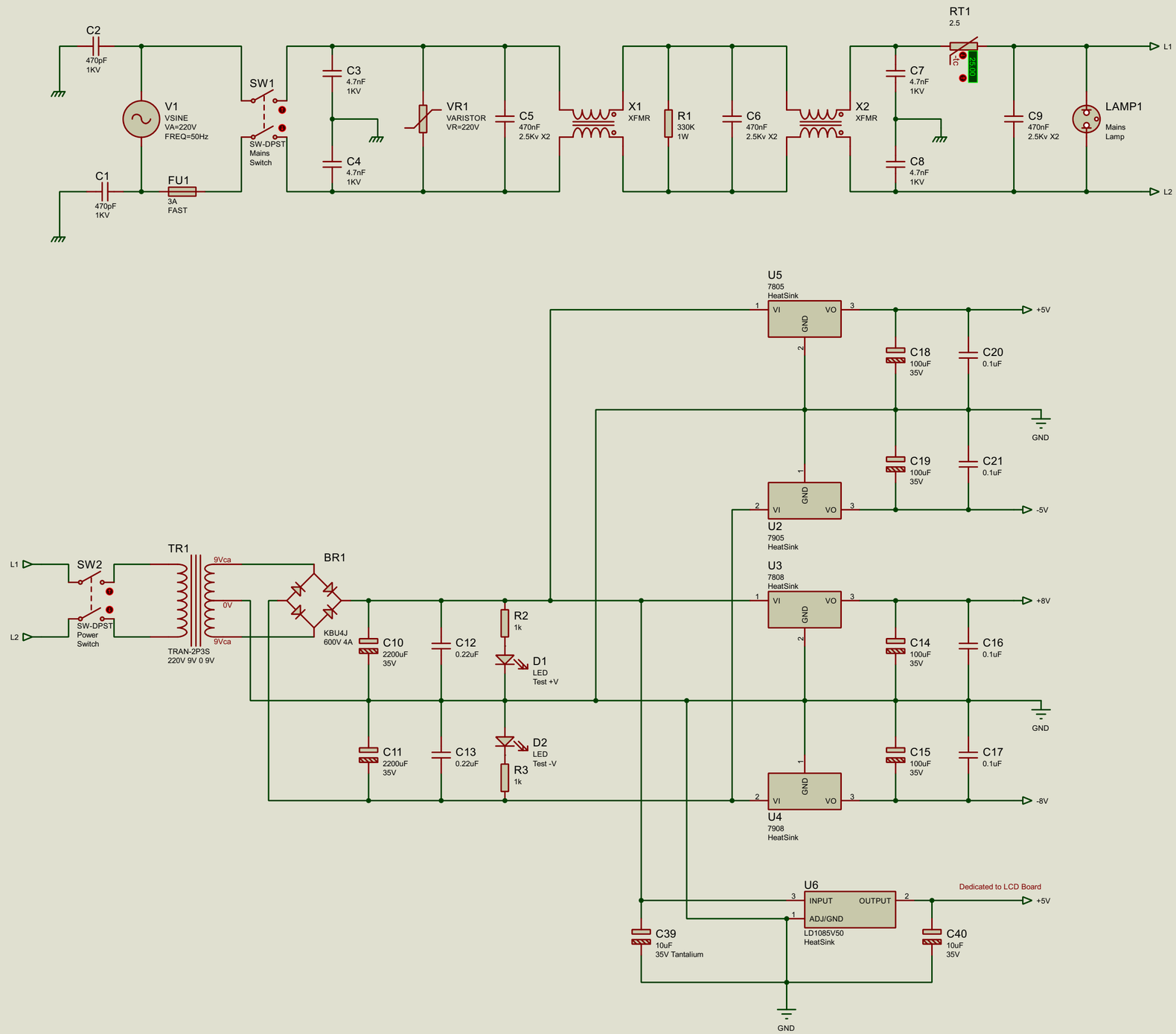

FILE NAME:	Alfonso_ICL8038.pdsprj	DATE: 12/04/2023	
DESIGN TITLE:	Power Supply +-8V +-5V (EMI Filter)		PAGE: 5 of 5
PATH:	Alfonso_ICL8038.pdsprj		
BY:	Emiliano Mazza 2022	REV: 1.0.0	TIME: 00:53:12