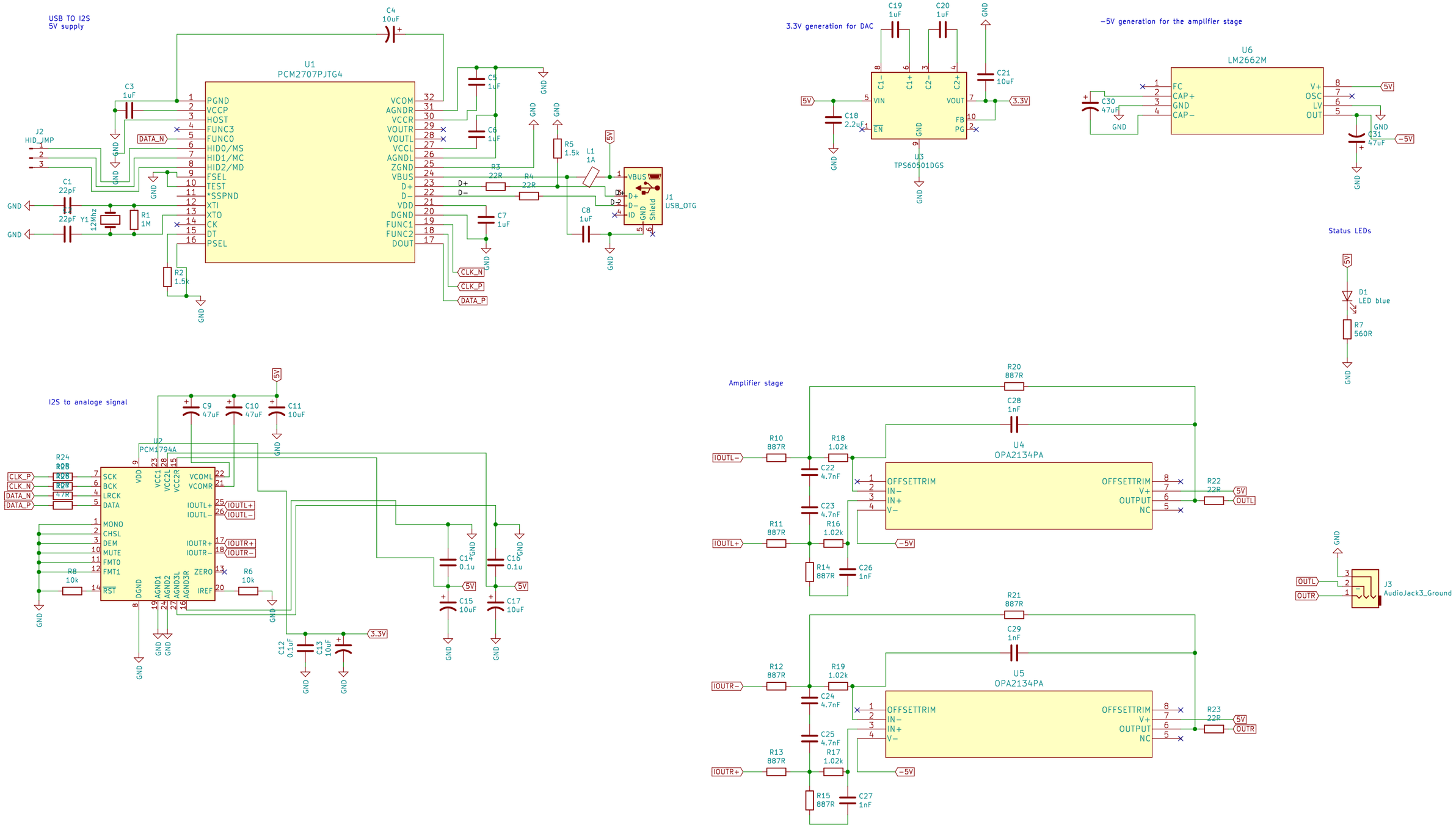

Sheet: /
File: headphone_amp_v2.sch

Title: USB headphone DAC with amp stage

Size: A3	Date: 2018-09-20	Rev: 0.2
KiCad E.D.A. kicad (5.0.0)		Id: 1/1