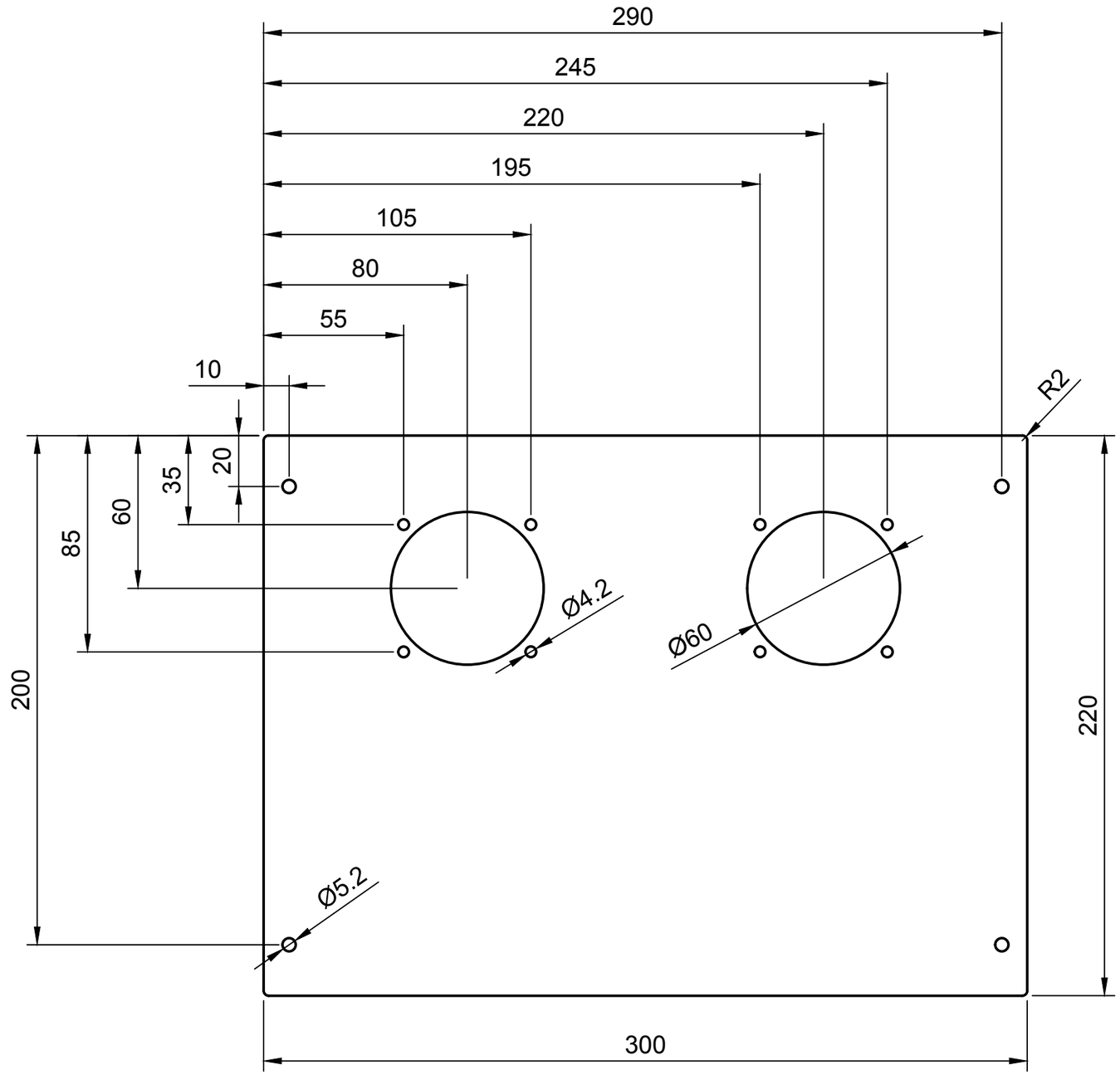

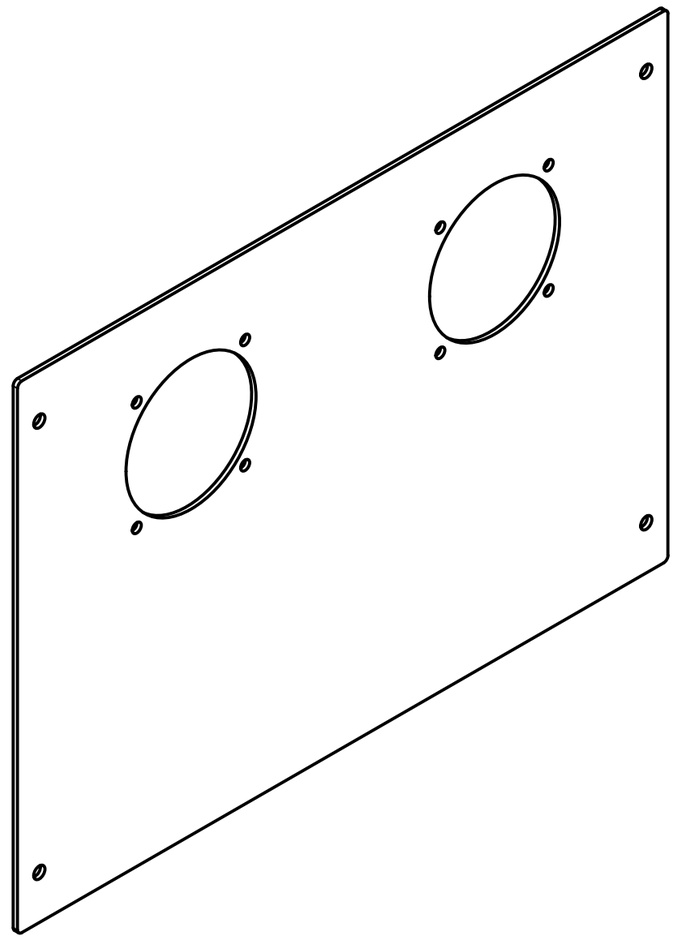

Spessore 2 mm

Dept.	Technical reference	Created by Martino Migliavacca 11/09/2020	Approved by	
		Document type	Document status	
		Title Cart	DWG No.	
			Rev. / Date of issue	Sheet 1/1