NEXT ASSEMBLY	REPLACES DRG. NO.

SOMCHEM

APPROVED FOR CONSTRUCTION

DWG						
DST	FE					
REVISION	R2	R3	R4	R5	R6	R7
SOMCHEM						
FE						
P.M.						

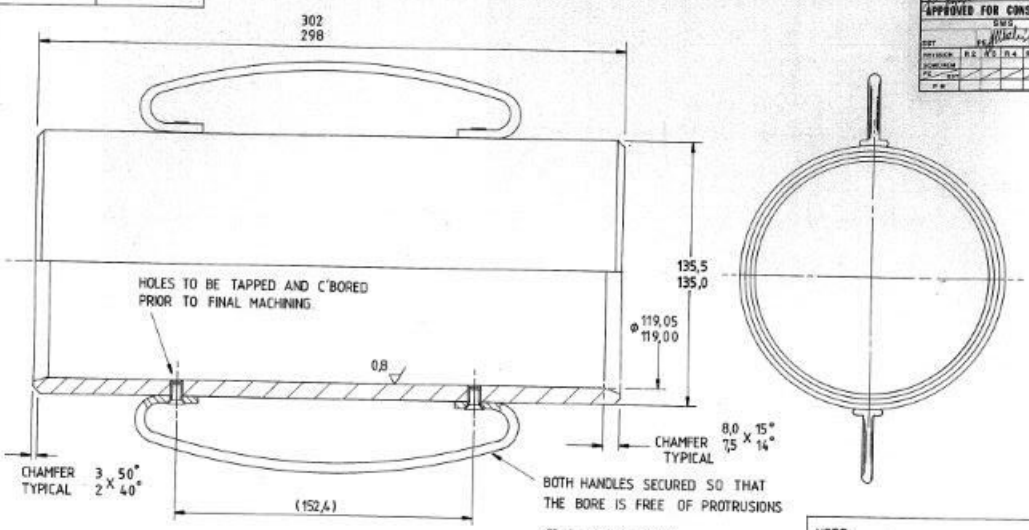

GRAB HANDLE Nº 97
WALTER Mc NAUGHTAN (Pty) LTD.

NOTE:
MATERIAL BRONZE
UNLESS OTHERWISE STATED, SURFACE FINISH TO BE 3,2 µm Ra to BS 1134

WRITTEN TOKENING IS DIE EIENDOM VAN SOMCHEM (EDMS) BPK. DIT MAG NIE GEBRUIK OF UITGELEEN WORD SONDER DIE WRYTELIKE AKKORDERING VAN SOMCHEM (EDMS) BPK. NIE EN MOET GEMERKBLIK TERUGGEBESKAM WORD NA VOLTOOIING VAN TERMER OF KONTRAK.

THIS DRAWING IS THE PROPERTY OF SOMCHEM (PTY) LTD. IT MUST NOT BE COPIED OR LOANED WITHOUT THE WRITTEN CONSENT OF SOMCHEM (PTY) LTD. AND MUST BE RETURNED ON THE COMPLETION OF TENDER OR CONTRACT.

AUTH. NO.	REV.	REVISION DESCRIPTION	BY	APPR.	DATE	AUTH. NO.

DO NOT SCALE

APPROVED	DATE	DRAWN
		TRACED
		CHECKED

SCALE

SOMCHEM (EDMS) BPK. SOMCHEM (PTY) LTD. SOMCHEM (PTY) LTD.

DWG. Nº 375-509-037
GAUGE FOR 127mm GRAINS

DRG. NO. 06-98-99091-03119

A2 REV

MICROBOX SOMCHEM