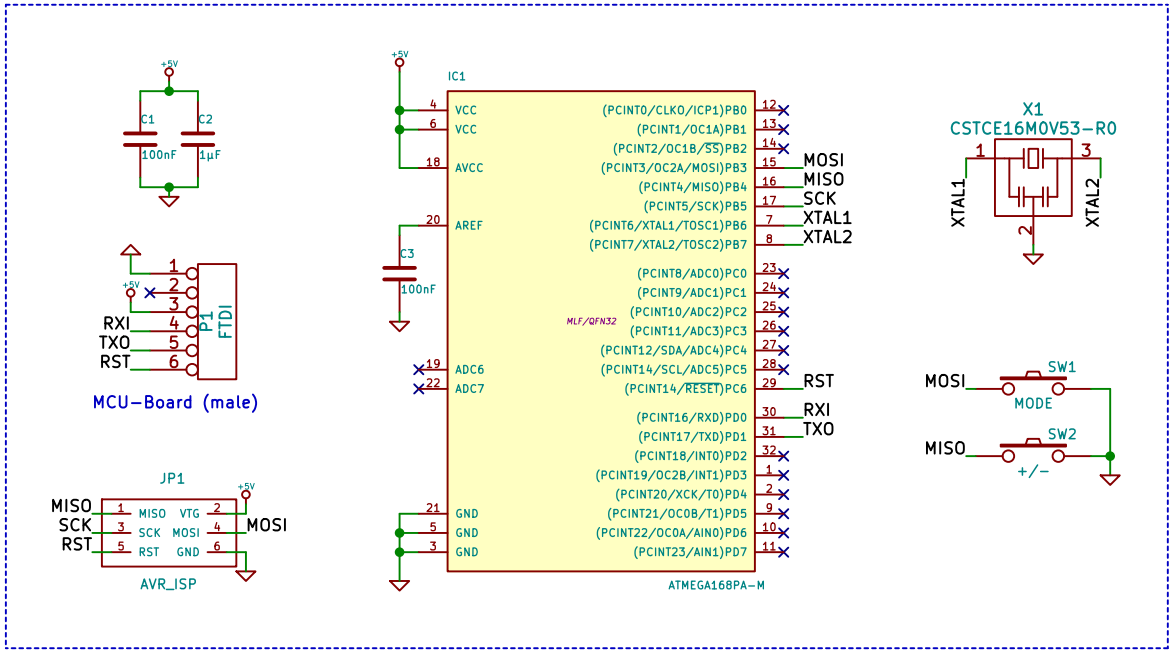

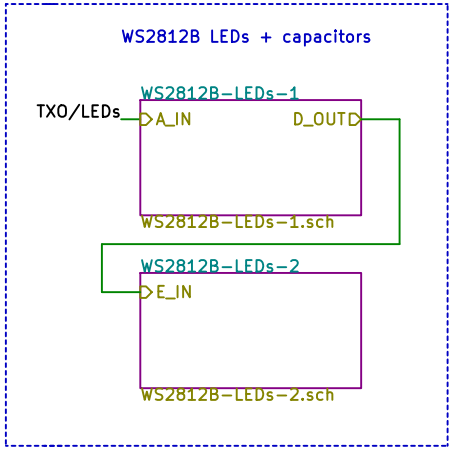

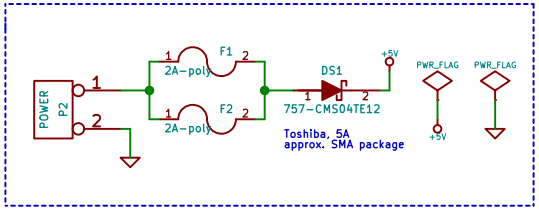

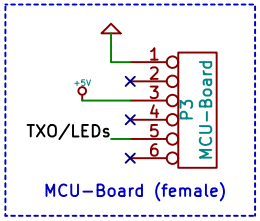

2014 – blog.spitzenpfeil.org

Sheet: /

File: IKEA-Samtid_mood-light.sch

Title: IKEA-Samtid_mood-light

Size: A4	Date: 12 Jul 2014	Rev: 0.14
KiCad E.D.A. kicad (2014-06-29 BZR 4957)-product		Id: 1/3

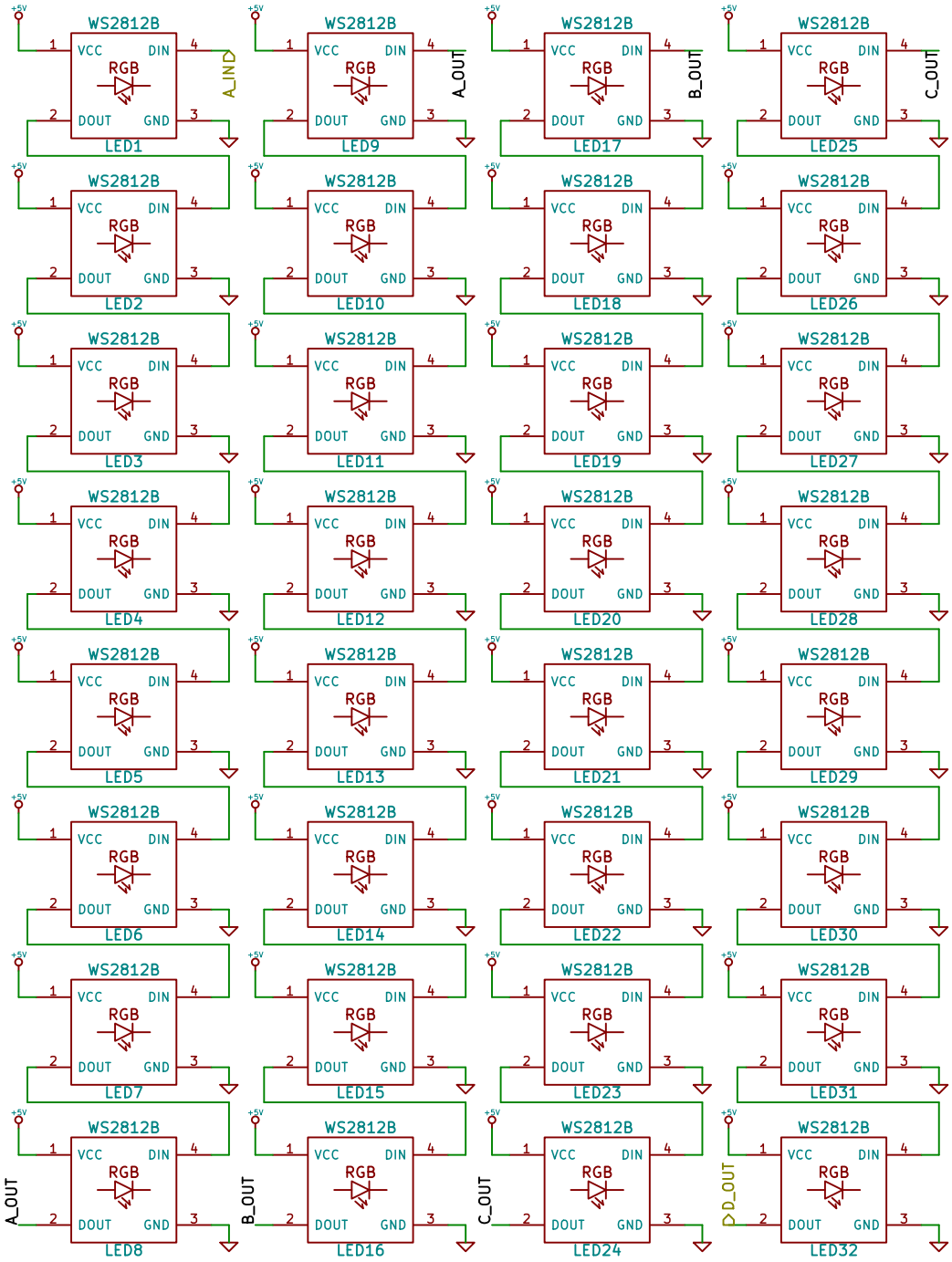

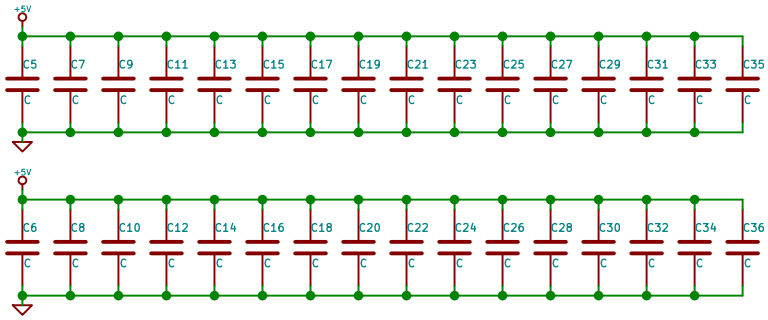

Sheet: /WS2812B-LEDs-1/
File: WS2812B-LEDs-1.sch

Title:

Size: A4	Date:	Rev:
KiCad E.D.A. kicad (2014-06-29 BZR 4957)-product		Id: 2/3

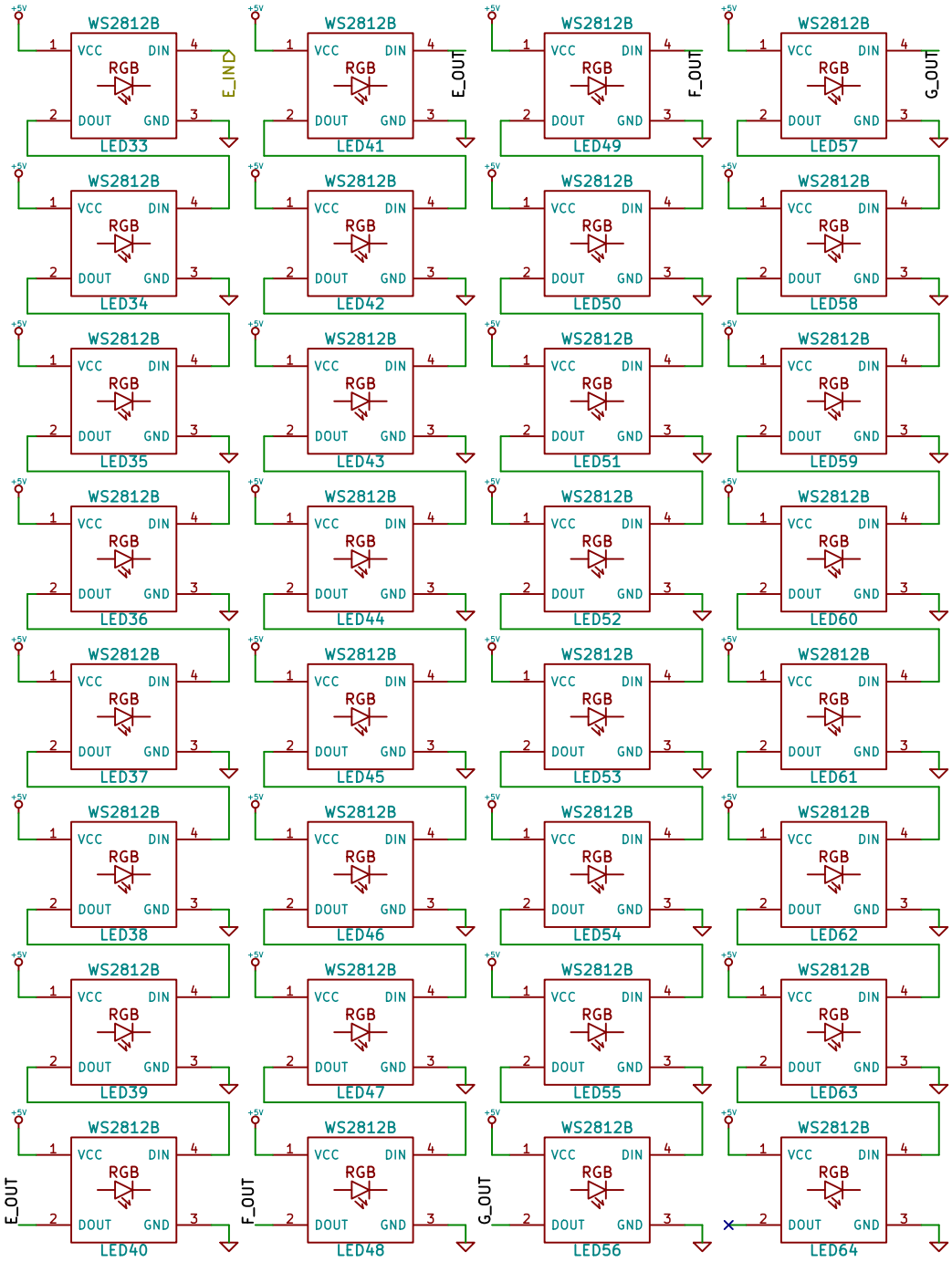

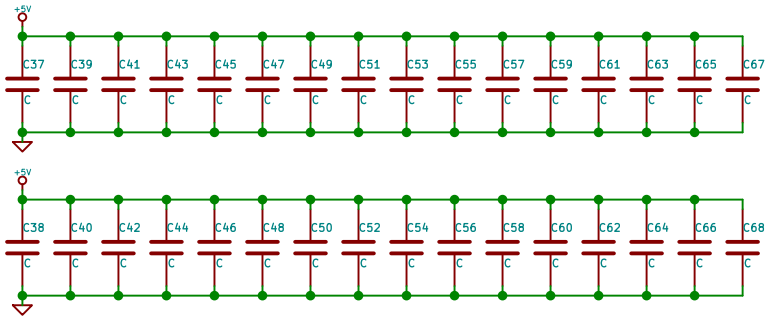

Sheet: /WS2812B-LEDs-2/
File: WS2812B-LEDs-2.sch

Title:

Size: A4	Date:	Rev:
KiCad E.D.A. kicad (2014-06-29 BZR 4957)-product		Id: 3/3