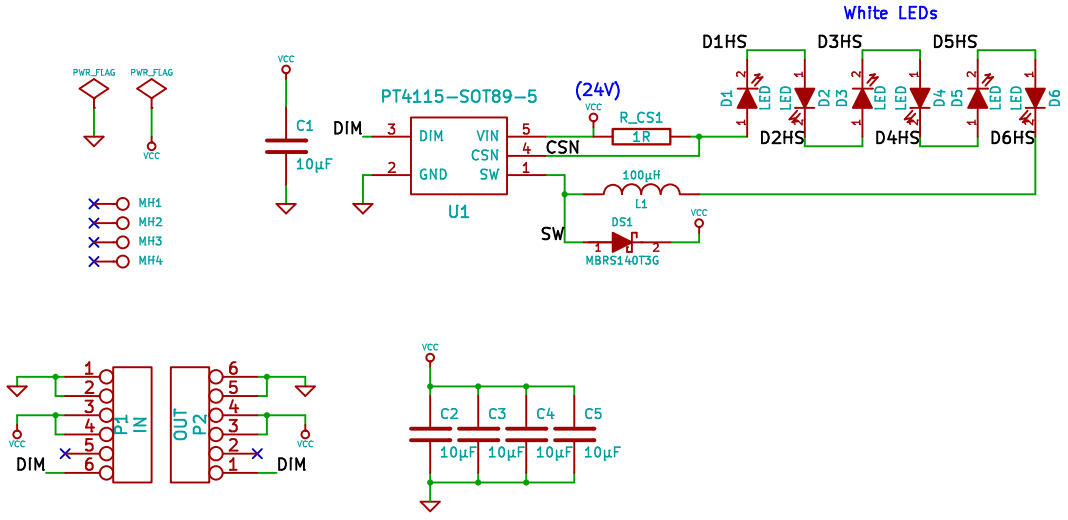

2012 – blog.spitzenpfeil.org		
File: LED-Square_PT4115.sch		
Sheet: /		
Title: LED-Square PT4115		
Size: User	Date: 24 oct 2012	Rev: 0.10
KiCad E.D.A. eeschema (2012-jan-04)-stable		Id: 1/1