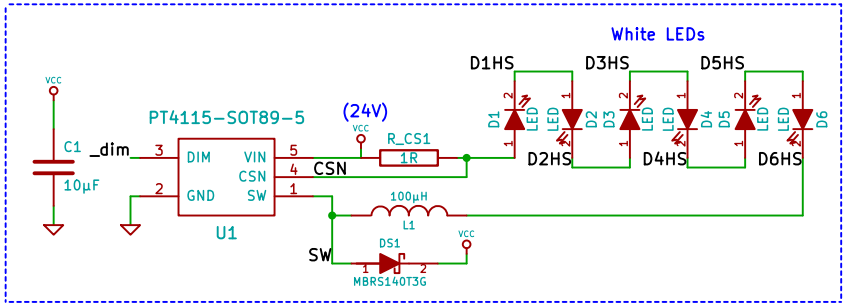

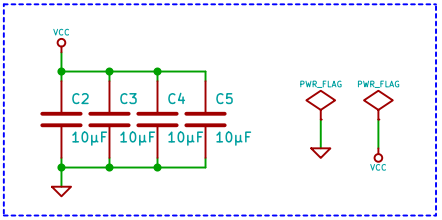

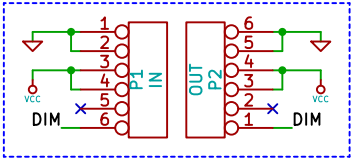

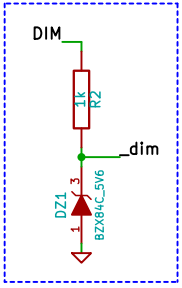

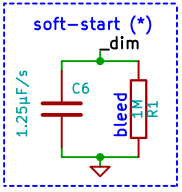

(*) don't use C6 when driving DIM with a 5V PWM signal.

2012 – blog.spitzenpfeil.org		
File: LED-Square_PT4115.sch		
Sheet: /		
Title: LED-Square PT4115		
Size: User	Date: 13 nov 2012	Rev: 0.20
KiCad E.D.A.		Id: 1/1