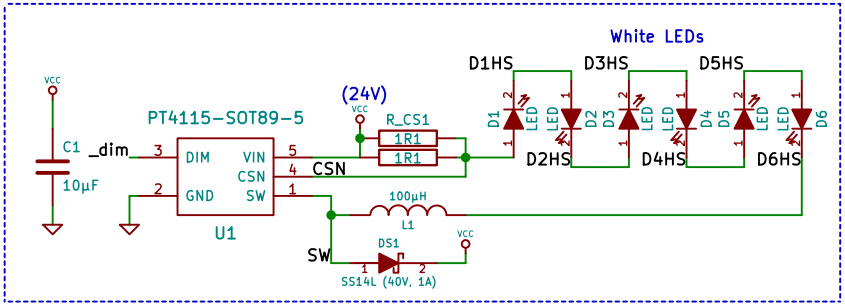

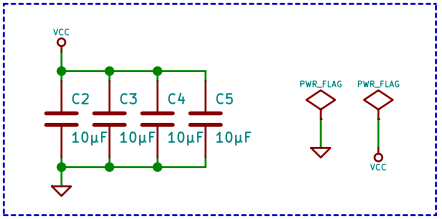

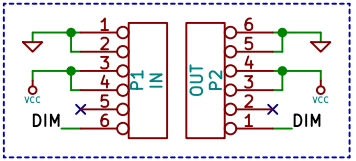

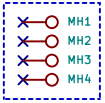

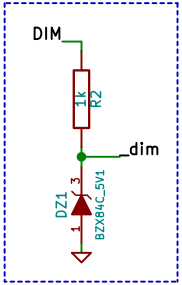

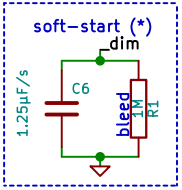

(*) Don't use C6 when driving DIM with a 5V PWM signal.
Replace R1 with a 10k pull-down resistor.

2014 – blog.spitzenpfeil.org

Sheet: /
File: LED-Square_PT4115.sch

Title: LED-Square PT4115

Size: User	Date: 05 Mar 2014	**Rev: 1.11**
KiCad E.D.A. eeschema (2014-03-03 BZR 4732)-product		Id: 1/1