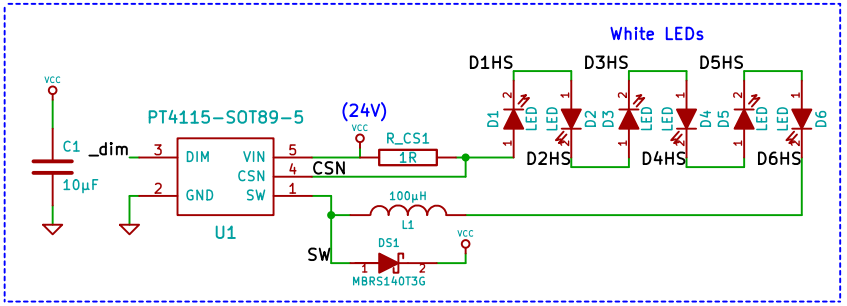

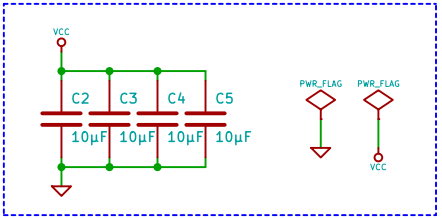

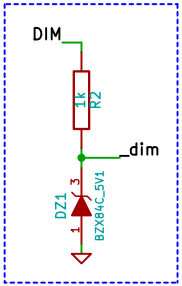

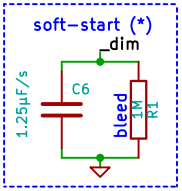

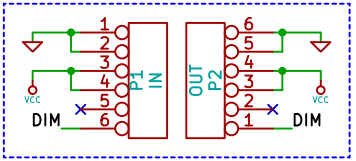

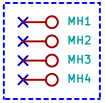

(*) Don't use C6 when driving DIM with a 5V PWM signal.
Replace R1 with a 10k pull-down resistor.

2012 – blog.spitzenpfeil.org		
File: LED-Square_PT4115.sch		
Sheet: /		
Title: LED-Square PT4115		
Size: User	Date: 20 nov 2012	Rev: 1.0
KiCad E.D.A.		Id: 1/1