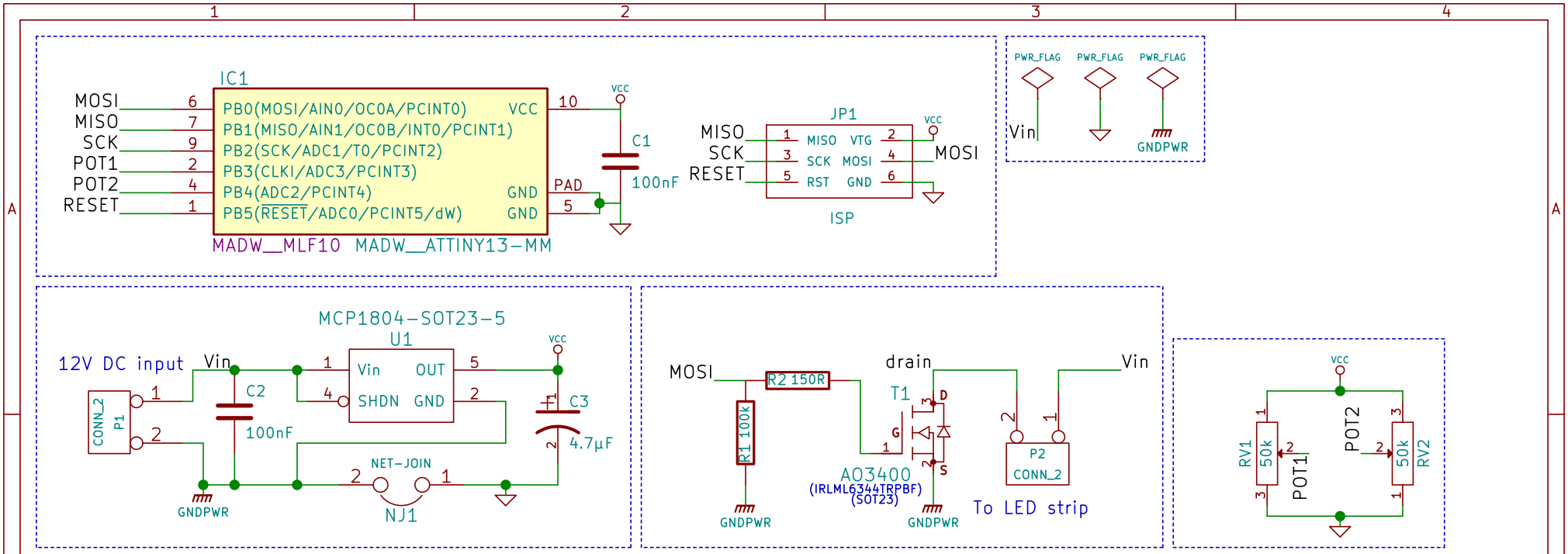

2013 – blog.spitzenpfeil.org

Sheet: /

File: LED-strip_PWM.sch

Title: LED-strip_PWM

Size: User	Date: 18 Jul 2013	**Rev: 0.12**
KiCad E.D.A. kicad (2016-09-16 revision 6689c7e)-master		Id: 1/1