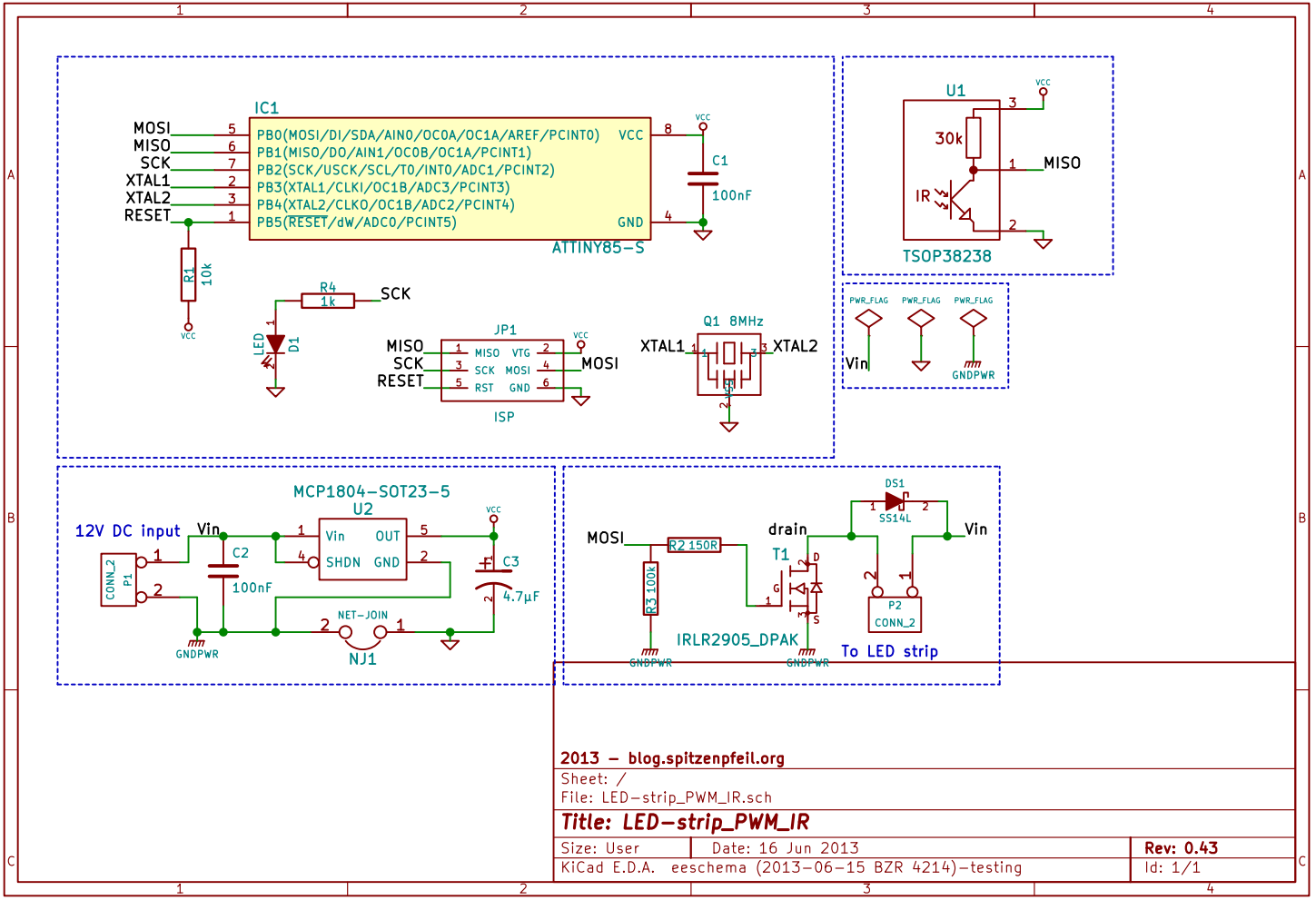

2013 – blog.spitzenpfeil.org

Sheet: /

File: LED-strip_PWM_IR.sch

Title: LED-strip_PWM_IR

Size: User	Date: 16 Jun 2013	Rev: 0.43
KiCad E.D.A. eeschema (2013-06-15 BZR 4214)-testing		Id: 1/1