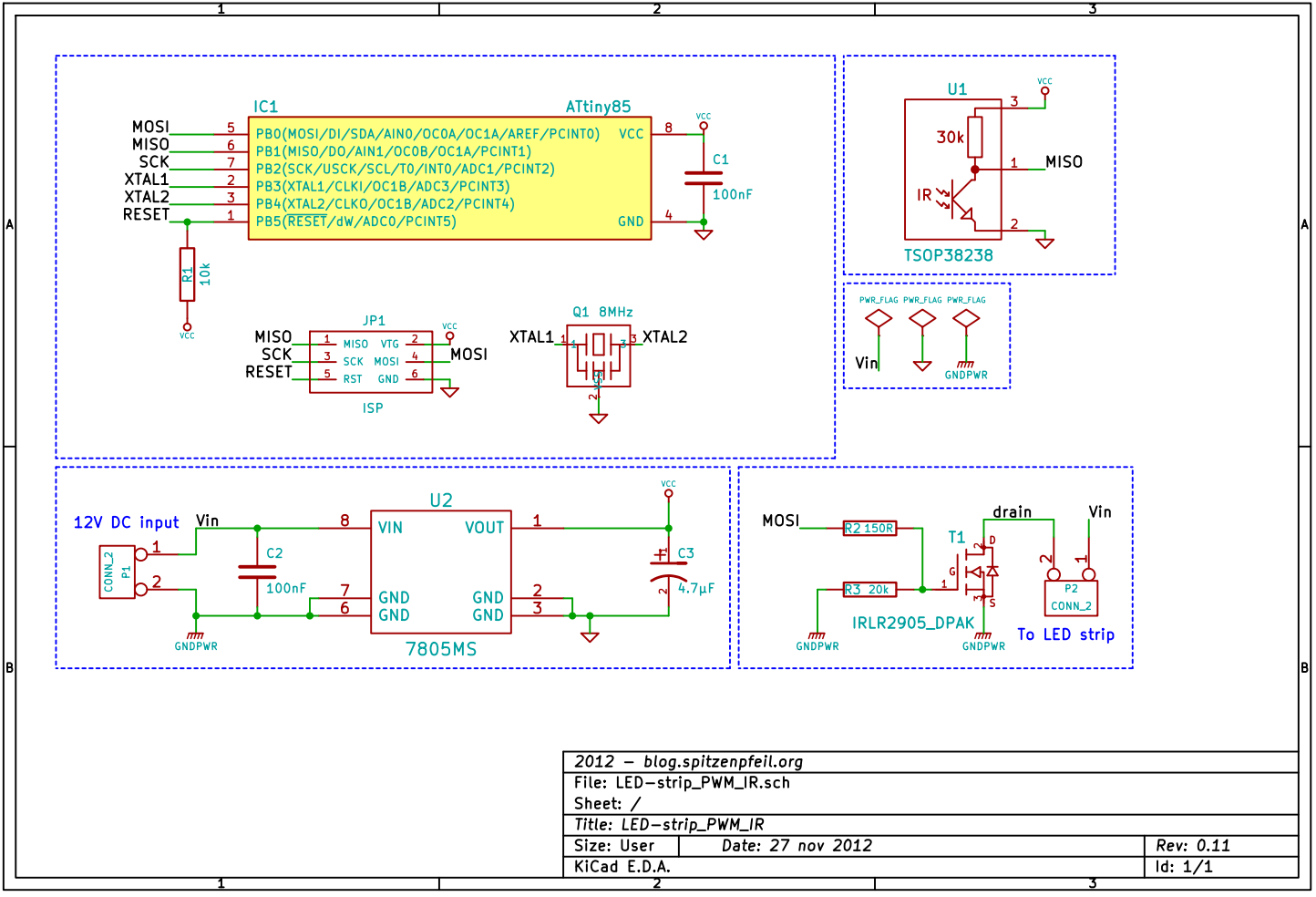

2012 – blog.spitzenpfeil.org		
File: LED–strip_PWM_IR.sch		
Sheet: /		
Title: LED–strip_PWM_IR		
Size: User	Date: 27 nov 2012	Rev: 0.11
KiCad E.D.A.		Id: 1/1