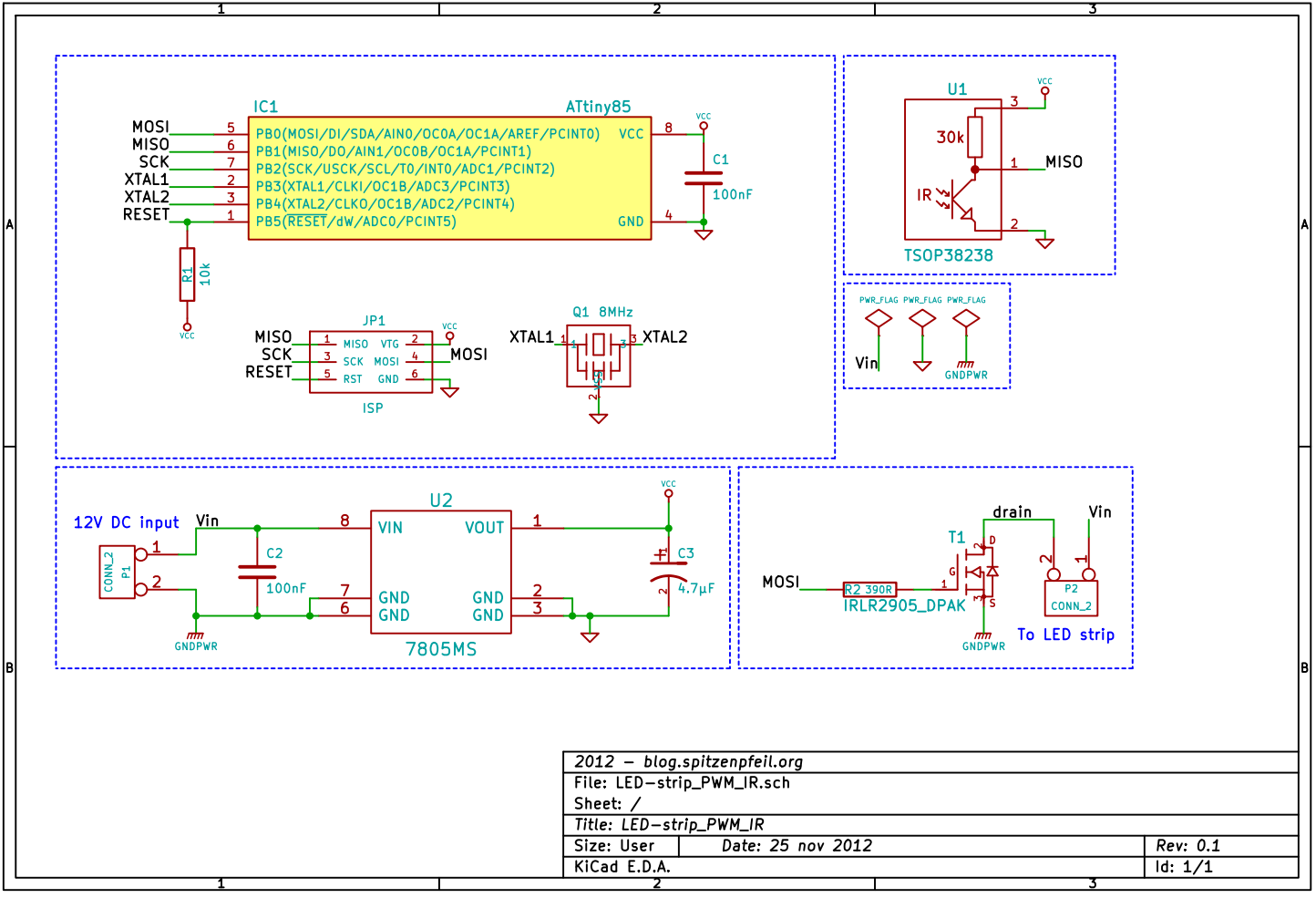

2012 – blog.spitzenpfeil.org		
File: LED–strip_PWM_IR.sch		
Sheet: /		
Title: LED–strip_PWM_IR		
Size: User	Date: 25 nov 2012	Rev: 0.1
KiCad E.D.A.		Id: 1/1