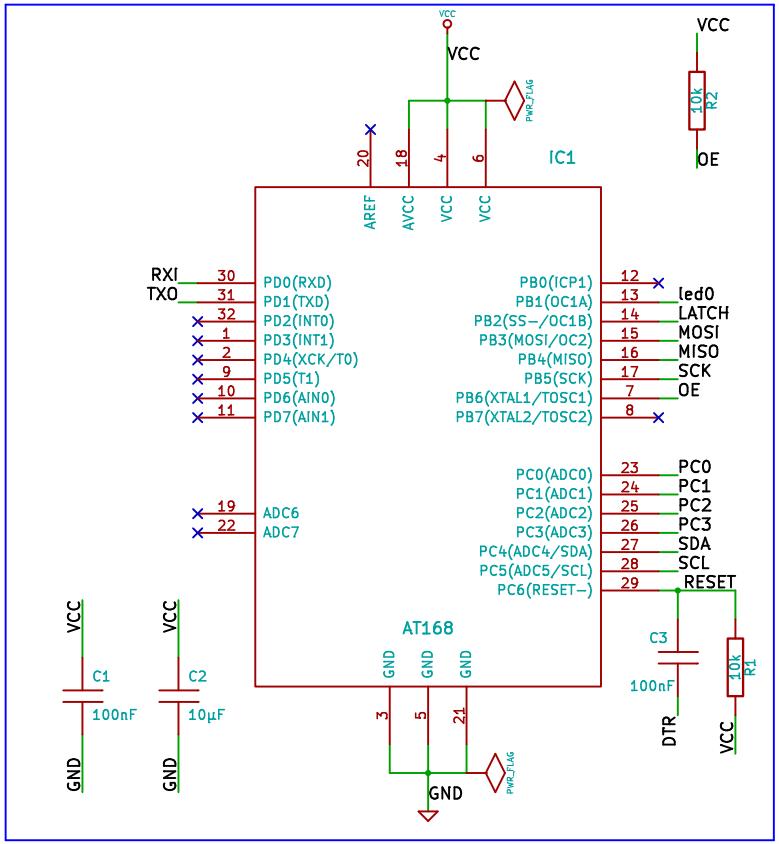

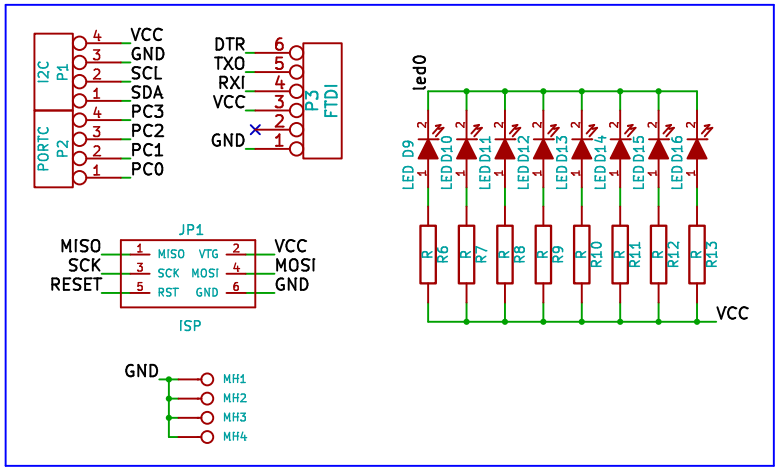

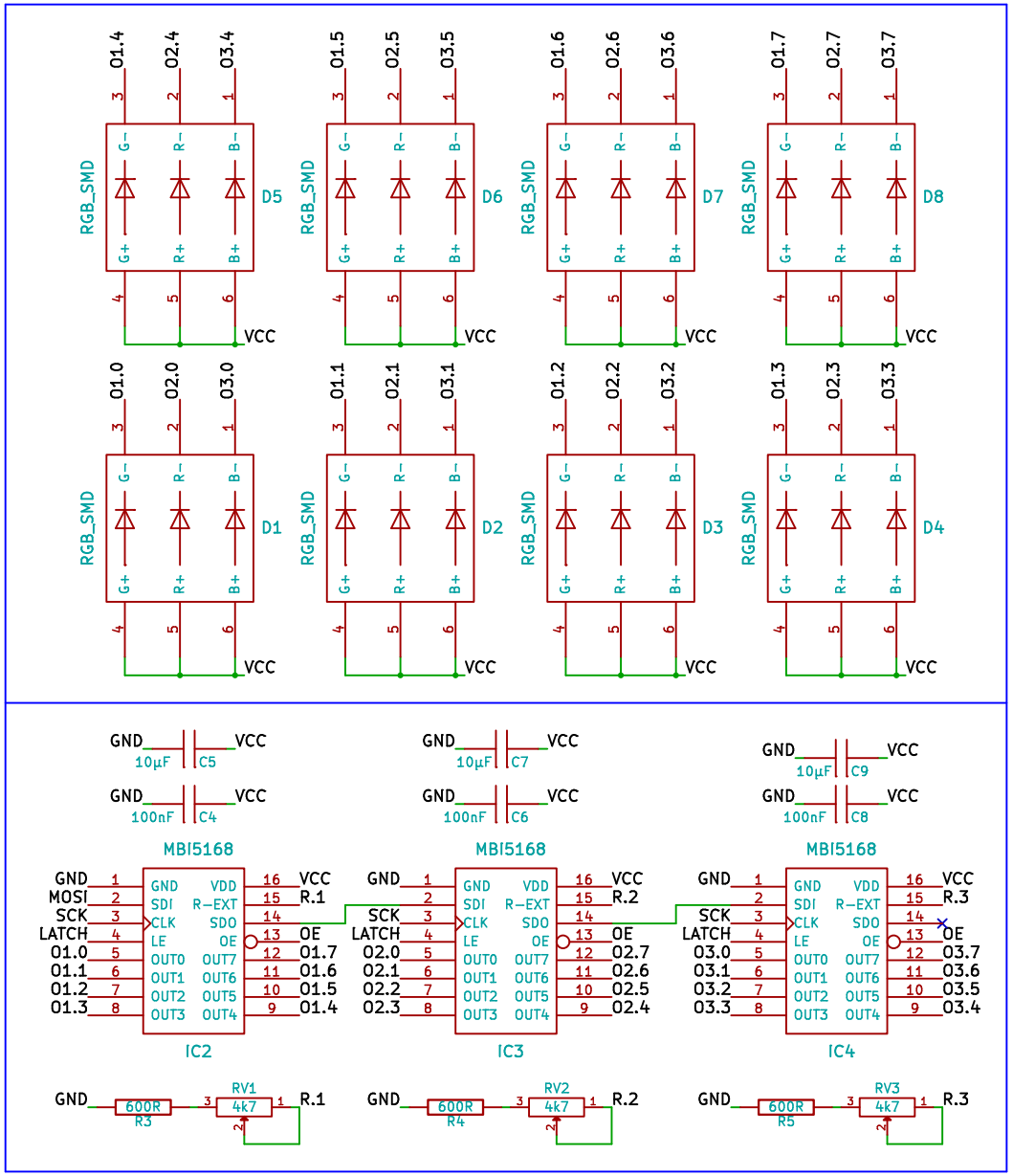

2012 – My 2muF – blog.spitzenpfeil.org		
File: rgb_led_toy.sch		
Sheet: /		
Title: RGB LED Toy		
Size: A4	Date: 10 jan 2012	Rev: 2.0.d
KiCad E.D.A. eeschema (2011-07-08)-stable		Id: 1/1