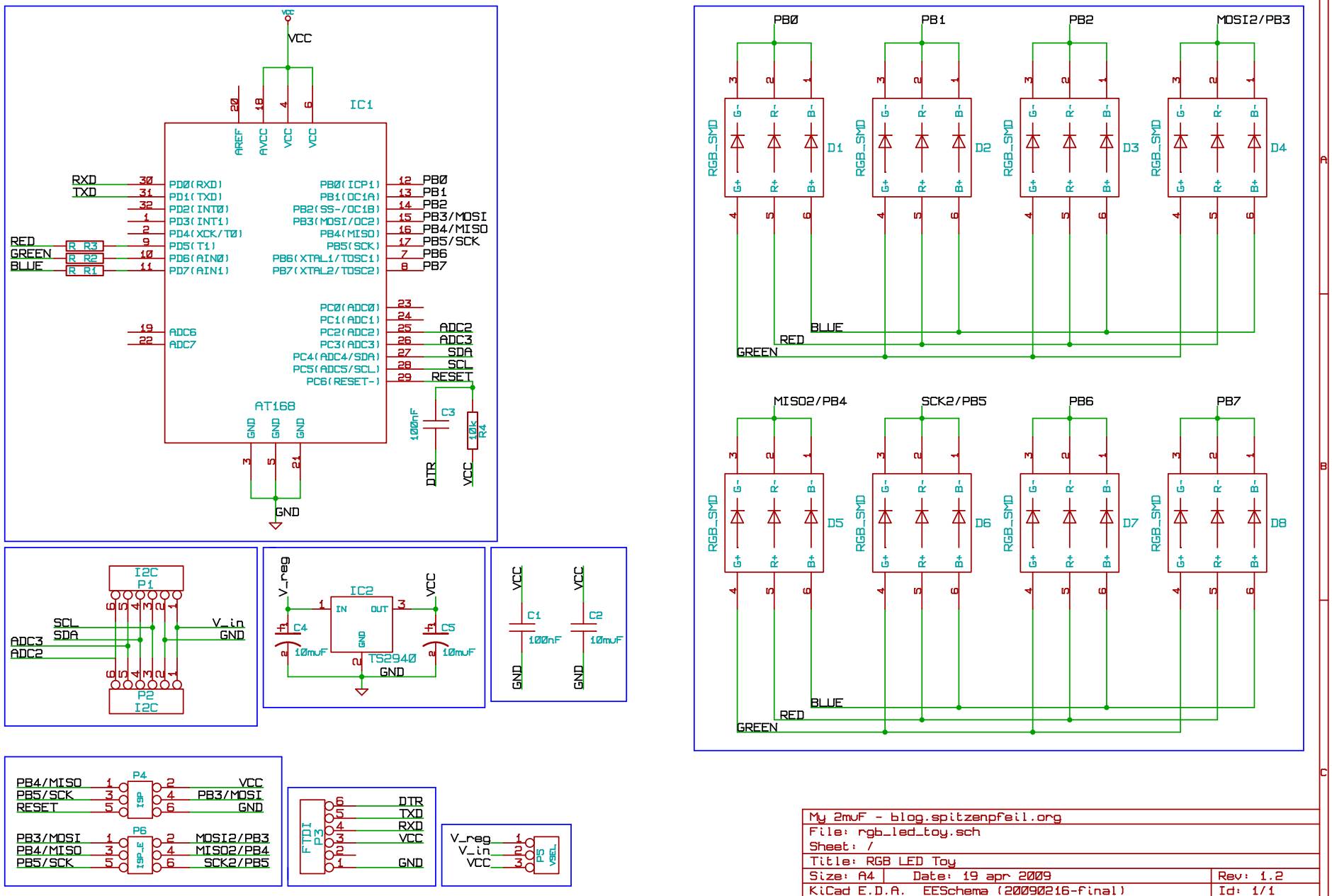

My 2muF - blog.spitzenpfeil.org		
File: rgb_led_toy.sch		
Sheet: /		
Title: RGB LED Toy		
Size: A4	Date: 19 apr 2009	Rev: 1.2
KiCad E.D.A. EESchema (20090216-final)		Id: 1/1