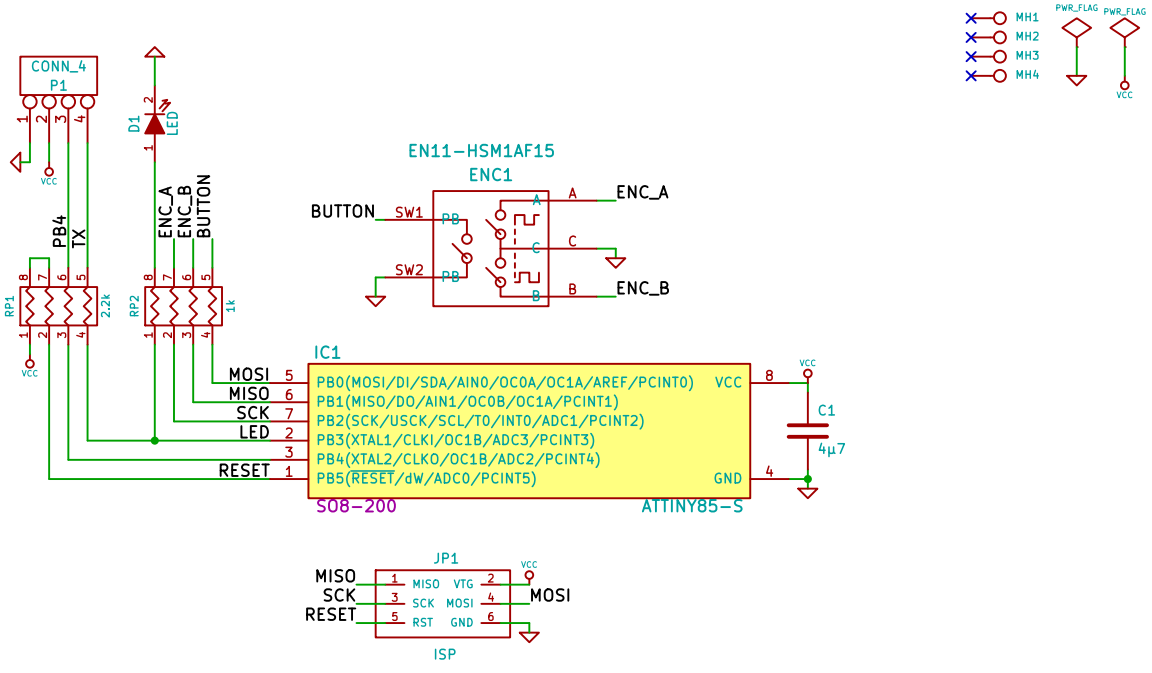

2013 – blog.spitzenpfeil.org		
File: Serial-Knob.sch		
Sheet: /		
Title: Serial Knob – a.k.a. "The Knob"		
Size: User	Date: 2 mar 2013	Rev: 1.00
KiCad E.D.A.		Id: 1/1