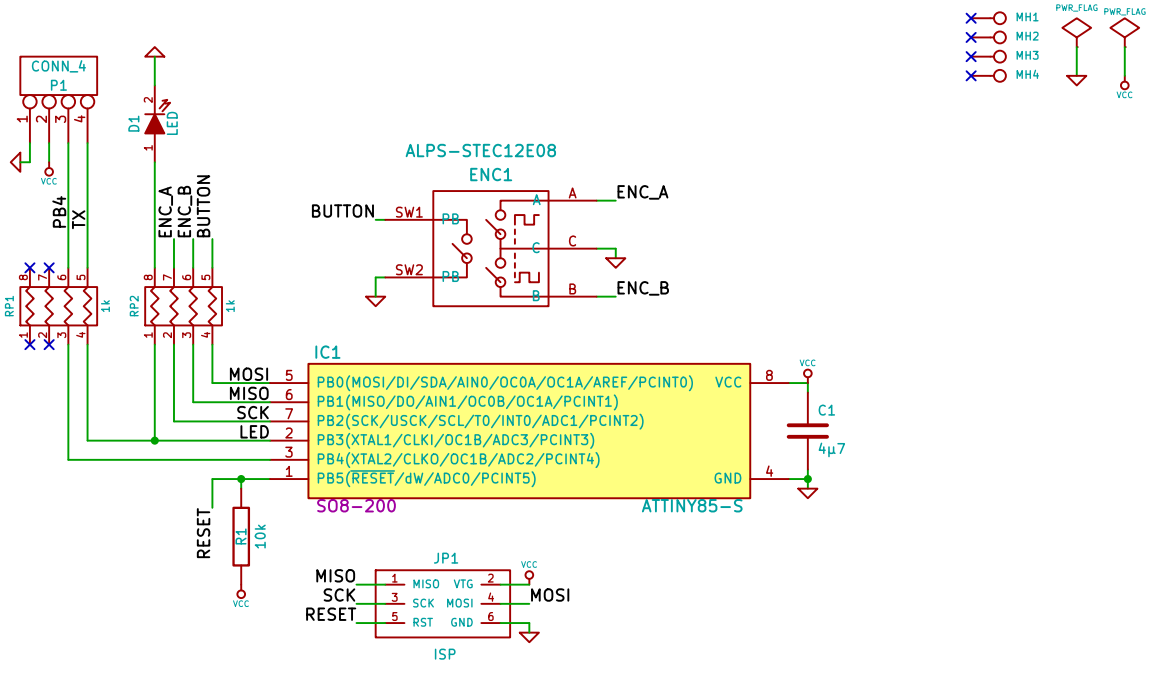


| | | |
|---|---|---|
| 2013 – blog.spitzenpfeil.org | | |
| File: Serial-Knob.sch | | |
| Sheet: / | | |
| Title: Serial Knob – a.k.a. "The Knob" | | |
| Size: User | Date: 1 mar 2013 | Rev: 0.2 |
| KiCad E.D.A. | | Id: 1/1 |