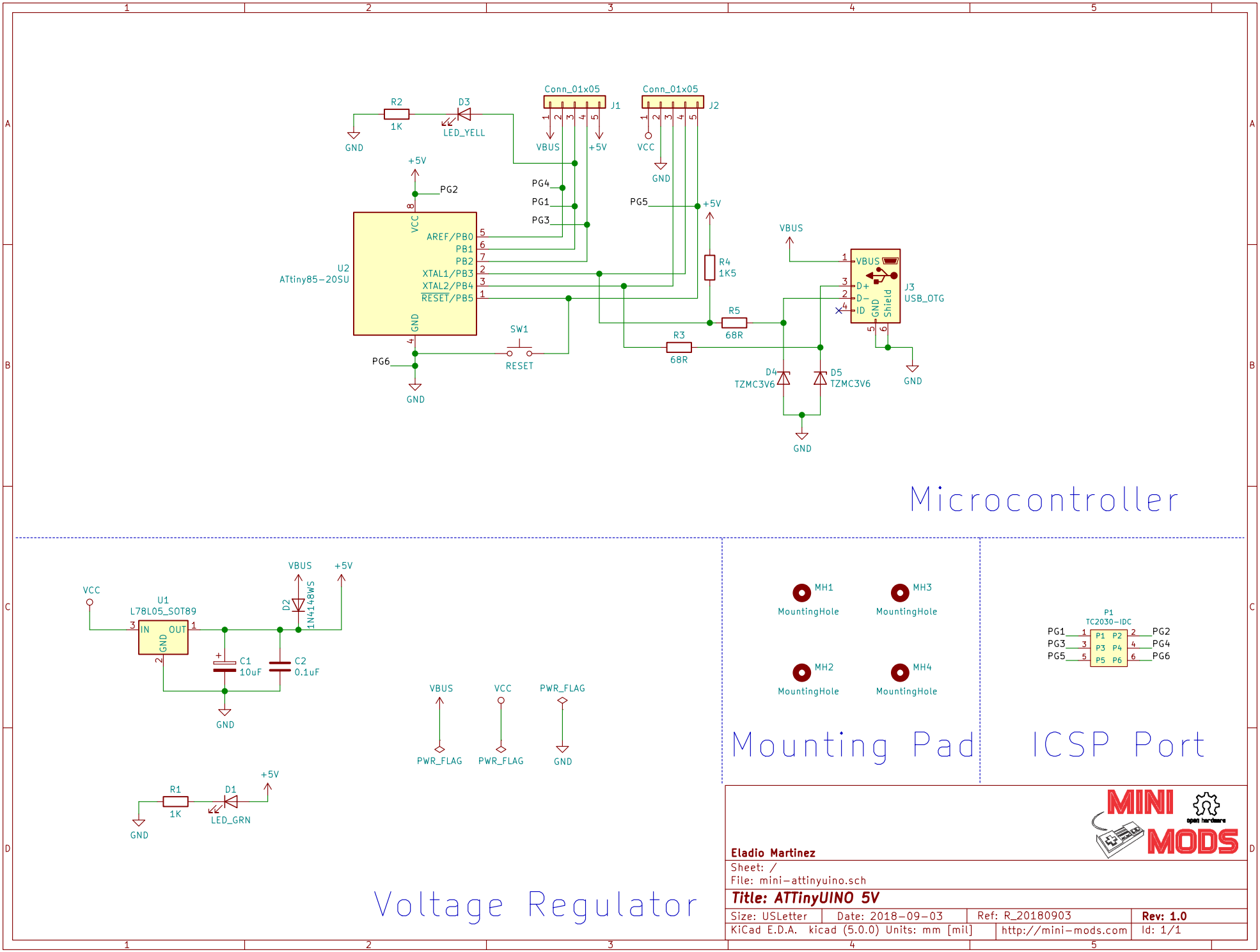
Microcontroller
Mounting Pad
ICSP Port
Voltage Regulator
U2
ATtiny85-20SU
AREF/PB0
PB1
PB2
XTAL1/PB3
XTAL2/PB4
RESET/PB5
VCC
GND
J1
Conn_01x05
J2
Conn_01x05
J3
USB_OTG
VBUS
D+
D-
ID
Shield
R1
1K
R2
1K
R3
68R
R4
1K5
R5
68R
D1
LED_GRN
D2
1N4148WS
D3
LED_YELL
D4
TZMC3V6
D5
TZMC3V6
SW1
RESET
U1
L78L05_SOT89
IN
OUT
C1
10uF
C2
0.1uF
PWR_FLAG
MH1
MH2
MH3
MH4
MountingHole
P1
TC2030-IDC
PG1
PG2
PG3
PG4
PG5
PG6
+5V
Eladio Martinez
Sheet: /
File: mini-attinyuino.sch
Title: ATTinyUINO 5V
Size: USLetter
Date: 2018-09-03
Ref: R_20180903
Rev: 1.0
KiCad E.D.A. kicad (5.0.0) Units: mm [mil]
http://mini-mods.com
Id: 1/1