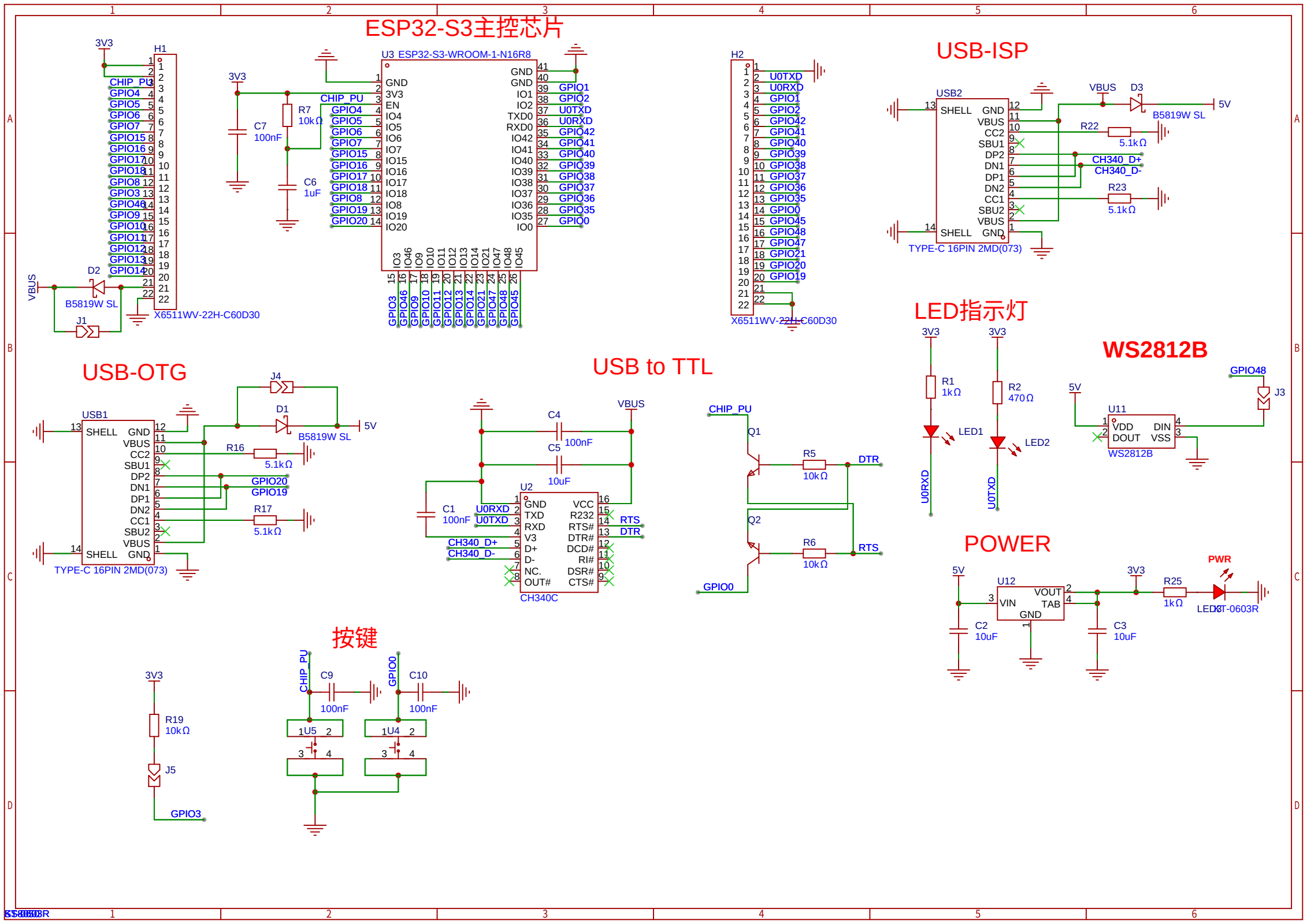
ESP32-S3主控芯片
U3 ESP32-S3-WROOM-1-N16R8
H1
X6511WV-22H-C60D30
H2
X6511WV-22H-C60D30
USB-ISP
USB2
TYPE-C 16PIN 2MD(073)
USB-OTG
USB1
TYPE-C 16PIN 2MD(073)
USB to TTL
U2
CH340C
LED指示灯
WS2812B
U11
POWER
U12
按键
3V3
VBUS
5V
CHIP_PU
GPIO0
GPIO3
GPIO48
PWR
DTR
RTS
U0RXD
U0TXD
CH340_D+
CH340_D-
GPIO20
GND
B5819W SL
LED1
LED2
LED3
LED4
R1 1kΩ
R2 470Ω
R5 10kΩ
R6 10kΩ
R7 10kΩ
R16 5.1kΩ
R17 5.1kΩ
R19 10kΩ
R22 5.1kΩ
R23 5.1kΩ
R25 1kΩ
C1 100nF
C2 10uF
C3 10uF
C4 100nF
C5 10uF
C6 1uF
C7 100nF
C9 100nF
C10 100nF
Q1
Q2
J1
J3
J4
J5
D1
D2
D3