Computer Museum

Table Of Contents

Section I The Winchester Disc Drive

Chapter 1 General Information

General Description 1-1
Technical Specifications 1-2

Chapter 2 Theory Of Operation

Winchester Disc Drive Theory of Operation 2-1
Functional Characteristics 2-1
Drive Mechanism 2-2
Air Filtration System 2-2
Head Positioning Mechanism 2-2
Read/Write Heads and Discs 2-2
Functional Operation 2-3
Drive Electronics Theory of Operation 2-4
Winchester Disc Drive Adjustments 2-6
Equipment Required 2-6
Brake Adjustment (Earlier Winchester Drives) 2-6
Index Sensor Adjustment 2-6
Motor Speed Adjustment 2-8
Drive Electronics PCA - P/N 09133-69101 or 09133-69103 2-10
Drive Electronics PCA - P/N 09133-69101 or 09133-69103 2-12

Section II HP 9133A/B, 9134A/B, and 9135A Disc Memory Products

Chapter 1 Theory Of Operation

General Description 1-1
Product Configuration
Winchester Controller PCA Theory of Operation
(88134-69910, 09135-69515, and 09135-69501) 1-3
Controller Theory of Operation (09133-69514) 1-4
Microprocessor Circuit 1-5
Disc Controller, HP-IB Chip, Input and Output Ports 1-5
Power Supply Theory of Operation 1-6
Voltage Reference Circuit 1-7
Regulators +5 VDC and +12 VDC 1-7
VREF Circuit 1-7
Crowbar Circuit 1-7

HP Computer Museum
www.hpmuseum.net

For research and education purposes only.

Controller Selftests (88134-69910, 09135-69515, and 09135-69501) 1-7
Controller Selftests (09133-69514) 1-8
Selftest Results 1-8
Controller (P/N 09133-69514) Jumper Configurations 1-9
Controller PCA Test Point Location and Waveform Description 1-9

Chapter 2 Assembly Access
Introduction 2-1
Safety Considerations 2-3
Top Cover Removal 2-4
Winchester Disc Drive Controller PCA Removal 2-5
Drive Assembly Removal 2-6
Drive Electronics PCA Removal 2-6
Power Supply PCA Removal 2-6
Front Panel Removal 2-6
Rear Panel Removal 2-6
Bottom Panel Removal 2-6
Front and Rear Panel Bezel Removal 2-7
5 1/4 Flexible Disc Drive Disassembly Removal 2-8
Flexible Disc Drive Controller PCA Removal 2-9
Flexible Disc Drive Assembly Removal 2-9

Chapter 3 Replaceable Parts
Introduction 3-1
Replaceable Parts List 3-2
5 1/4-inch Flexible Disc Parts 3-5

Chapter 4 Schematic Diagrams
Introduction 4-1

Chapter 5 Product Operation and Specifications
HP 9133A/B Disc Memory 5-1
Technical Specifications 5-2
System Operation 5-4
Write Protection 5-4
Controls and Indicators 5-4
Applying Power 5-5
HP 9134A/B Disc Memory 5-5
Technical Specifications 5-6
Write Protection 5-6
Controls and Indicators 5-6
Applying Power 5-6
HP 9135A Disc Memory 5-7
Technical Specifications 5-8
Write Protection 5-8
Controls and Indicators 5-8
Applying Power 5-9

Chapter 6 Product Installation
Equipment Supplied 6-1
Unpacking Your Disc Memory 6-1
Configuring Power 6-2
Setting the Line Voltage Select Switches 6-2
Fuses 6-2
Power Cords 6-3
Interfacing the Disc Memories to Your System 6-3
Selecting the Device Address 6-3
Cleaning the Case 6-5

Section III HP 9133V/XV & 9134XV Disc Memories

Chapter 1 Controller & Power Supply Theory of Operation
General Description 1-1
Product Hardware Assemblies 1-2
Power Supply Theory of Operation 1-2
Introduction 1-2
AC Input Circuits 1-3
Power-on Reset 1-4
Controller Theory of Operation 1-4
Microprocessor Circuit 1-4
Disc Controller, HP-IB Chip, Input and Output Ports 1-5

Chapter 2 Assembly Access
Introduction 2-1
Safety Considerations 2-1
General 2-1
Safety Symbols 2-1
Safety Earth Ground 2-2
Before Applying Power 2-2
Servicing 2-2
Assembly Access 2-2
Assembly Designations 2-2
Top Cover Assembly Removal 2-4
Front Panel Removal 2-4
Controller PCA Removal 2-5
Drive Assembly Removal 2-5
Dive Mounting Bracket Removal 2-5
Drive Electronics PCA Removal 2-6
Replaceable Assemblies 2-7
Power Supply Removal 2-7

Chapter 3 Replaceable Parts
Introduction 3-1

Chapter 4 Technical Specifications, Controls and Indicators
HP 9133V/XV Disc Memories 4-1
Technical Specifications 4-2

Controls and Indicators 4-3
HP 9134XV Disc Memory 4-4
Technical Specifications 4-5
Controls and Indicators 4-6

Chapter 5 Installation and Initial Checkout
Introduction 5-1
Equipment Supplied 5-1
Configuring Power 5-1
Setting the VOLTAGE SELECT Switch 5-1
Fuse 5-2
Power Cords 5-2
Interfacing to Your System 5-3
Selecting the Device Address 5-3
HP-IB Cables 5-4
HP-IB Interface Restrictions 5-4
Winchester Drive Operation 5-5
Initial Power-on and Checkout 5-5

Appendix
Introduction A-1
Configurations A-2
Logical Configurations: Single and 4-Volume A-2
Physical Configuration: Drives Supported A-2
Configuration Summary A-3
Address Transformations A-4
Single Platter Address Transformations A-5
Single-Volume Single Platter Address Transformation A-6
Status A-7
Stat 1 . . . . . A-8
Stat 2 . . . . . A-9
DSJ A-9
Selftest Results A-10
Selftest Error Codes A-10
Selftest LED A-12
Target Addresses A-13
Power-on State A-13
Overview of Command Set A-14
Command Order A-15
Command Timing A-16
Command Set Summary A-18
Holdoffs A-18
Holdoff Table A-19
Command Descriptions A-20
Amigo Clear A-20
Buffered Read and Send Data A-21
Buffered Read Verify and Send Data A-23
Buffered Write and Recieve Data A-23
Cold Load Read A-25

Door Lock A-25
Door Unlock A-26
Download A-26
Device Specified Jump (DSJ) A-27
END A-28
Format A-29
HP-IB CRC A-30
Identify A-31
ID Triggered Read A-32
Initialize and Receive Data A-32
Initiate Selftest A-34
Read Loopback Record A-36
Read Selftest Results A-37
Receive Data A-38
Request Logical Address and Send Address A-38
Request Physical Address and Send Address A-39
Request Status and Send Status A-40
SEEK A-41
Selected Device Clear A-42
Send Address or Status A-43
Send Data A-43
Set Address Record A-44
Set File Mask A-44
Unbuffered Read and Send Data A-45
Unbuffered Read Verify and Send Data A-47
Unbuffered Write and Receive Data A-48
Universal Clear A-49
Verify A-50
Write Loopback Record A-52
The 88134-69910, 09135-69515, and the 09135-69501 Controllers A-52
Address Transformations A-54
D-Code Dual Platter Transformations A-54
L-Code Dual Platter Transformations A-55
Initiate Selftest A-56
Read Selftest Results A-57
The 09133-69508 Controller A-59
Configurations A-59

Computer
Museum

Section I The Winchester Disc Drive

Chapter 1
General Information

- **General Description**
- **Technical Specifications**

General Description

The Winchester disc drive is a random access storage device utilizing up to three non-removable 5 1/4-inch discs or platters as storage media. Each surface employs one movable head to service 153/306 data tracks. The platter configurations (triple, dual, and single) of the Winchester drives used in the 913X products appear next:

ST506 - Dual-Platter 5-Mbyte (early units)
ST406 - Single-Platter 5-Mbyte (improved track density)
ST412 - Dual-Platter 10-Mbyte (improved track density)
ST419 - Triple-Platter 15-Mbyte (improved track density)

Mechanical and contamination protection for the heads, actuator, and discs is provided by an impact-resistant aluminum enclosure. Both electronic printed circuit assemblies are mounted outside this enclosure. A self-contained recirculating system supplies clean air through a 0.3-micron filter. A second port in the filter assembly allows pressure equalization with ambient air without chance of contamination.

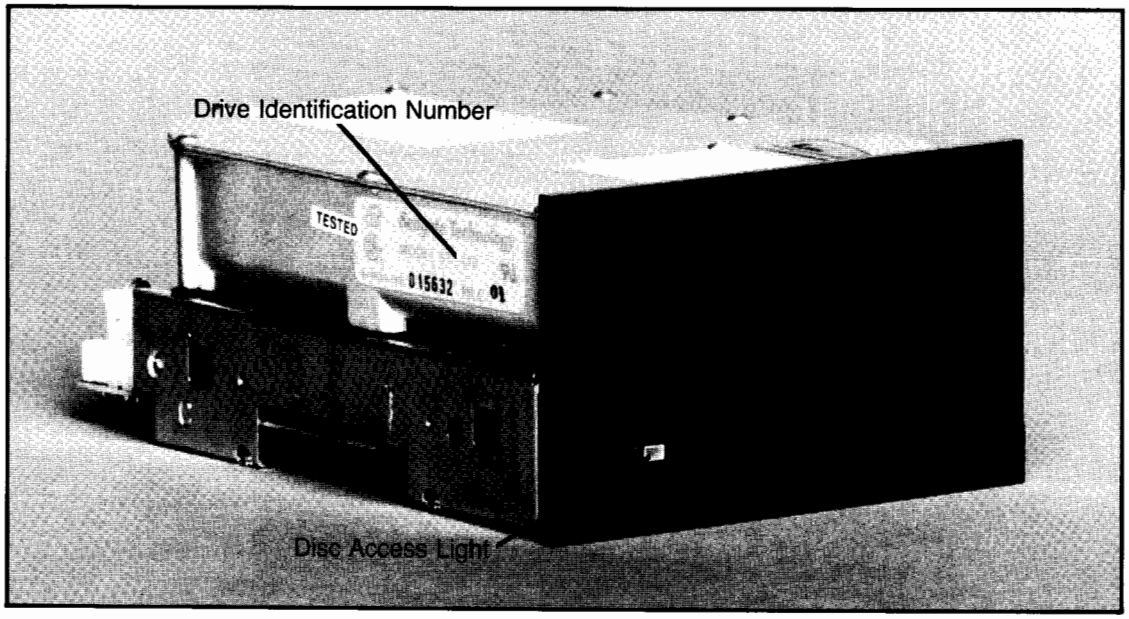

Figure 1-1. The Winchester Disc Drive

Technical Specifications

Listed below are the electrical and physical specifications for the 5 1/4-inch Winchester disc drive.

Formatted Storage
Capacities: Standard = 4.6-Mbyte - "D" Code or 4-Volume
("A" versions only)
Option 10 = 4.8-Mbyte ("L" Code or Single-Volume
("A" versions only)
Standard = 9.68 Mbyte ("L" Code or Single-Volume
("B" versions only)
Triple-Platter Capacity = 14.57 Mbyte

Average Access Time: 85 ms for the single-platter 5-Mbyte
and dual-platter 10-Mbyte drive.
170 ms for the dual-platter 5-Mbyte

Data Transfer Rates:
HP Format:
Sustained Average: 50 Kbytes/s
(Your system transfer rate may vary
due to your mainframe)

Rotational Speed: 3600RPM ± 1 %

Environmental Specs:
See the tabbed section for product environmental specs.

NOTE

The Winchester drive has no write protect capability. Therefore, caution must be used to avoid erasing or initializing over data you want to keep.

CAUTION

THE WINCHESTER DISC IS A DELICATE INSTRUMENT. MECHANICAL SHOCK CAN MISALIGN THE READ/WRITE HEADS RESULTING IN READ ERRORS AND/OR DAMAGED DISCS WHETHER OR NOT THE DISC IS OPERATING.

Chapter 2
Theory of Operation

- Winchester Disc Drive Theory of Operation
- Drive Electronics Theory of Operation
- Disc Drive Adjustments

Winchester Disc Drive Theory of Operation

Functional Characteristics

The following description is given for the 5, 10, and 15-Mbyte drives. The different configurations are presented in the following table:

Table 2-1. Winchester Configurations

	5 Mbyte Dual Platter	5 Mbyte Single Platter	10 Mbyte Dual Platter	15 Mbyte Triple Platter
Capacity (Mbyte)	5	5	10	15
Cylinders	153	306	306	306
Platters	2	1	2	3
Heads	4	2	4	6

The Winchester drive assembly consists of read/write electronics, read/write heads, head positioning actuator, media, and air filtration system. These components perform the following functions:

Interpret and generate control signals.
Position the heads over the desired tracks.
Read and write data.
Provide a contamination free environment for the media and heads.

Read/Write Control Electronics

The read/write electronics are packaged on two PCAs. One PCA contains circuitry which provides the following:

Index detection.
Head positioning.
Read and write capability.
Drive speed sensing.
Head selection.
Write fault detection.
Stepper motor control.
Drive selection.
Track zero detection.

The second PCA mounted under the one just described provides power and speed control to the spindle motor.

Drive Mechanism

A brushless DC motor rotates the spindle at 3600 rpm. The spindle is driven directly (no belt or pulley is used). A brake is used to provide a fast stop for the spindle motor when power is removed. This minimizes the time that the heads are in contact with the platter(s) as the motor slows.

Air Filtration System

The discs and read/write heads are fully enclosed in a module using an integral recirculation air system with an absolute filter which maintains a clean environment. Integral to the filter is a port which also permits pressure equalization with the ambient air without contaminant entry. The filter is not a replaceable assembly.

Head Positioning Mechanism

The read/write heads are mounted on a ball bearing support which is positioned by a split band actuator connected to the 2-phase stepper motor shaft.

Read/Write Heads and Discs

The storage disc consists of a lubricated thin magnetic oxide coating on one, two, or three 130mm (5.125 in.) diameter aluminum substrates. This coating formulation together with the low load force/low mass (9 grams) Winchester type flying heads, permits reliable head/media contact during start and stop operations. For each platter, there are two read/write heads (one for each disc surface); each head accesses 306 tracks for the 5, 10, or 15-Mbytes of data storage (153 tracks for the earlier ST506 drives).

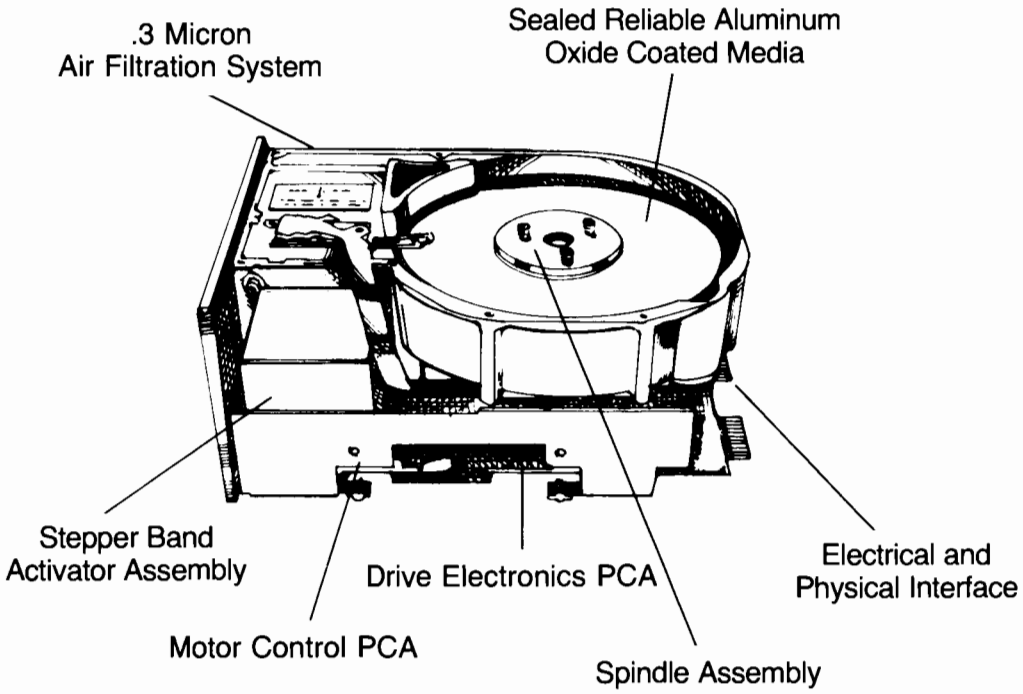

Figure 2-1. Winchester Drive Structure

Functional Operation

Power Sequencing

The +5 VDC and +12 VDC can be applied in any order. The spindle motor requires +12 VDC for operation. A motor speed sense circuit counts 512 revolutions of the disc. After 512 revolutions, the heads automatically recalibrate to track 0. For this recalibration to occur, the step input must be inactive. Track 0, SEEK COMPLETE, and READY signals are all set true sequentially (refer to Figure 2-2). The drive will not perform read, write or seek operations until READY is set true.

Drive Selection

The drive select allows up to four drives to be connected to a controller PCA. The select lines are wire-OR'ed so that the one drive is always selected.

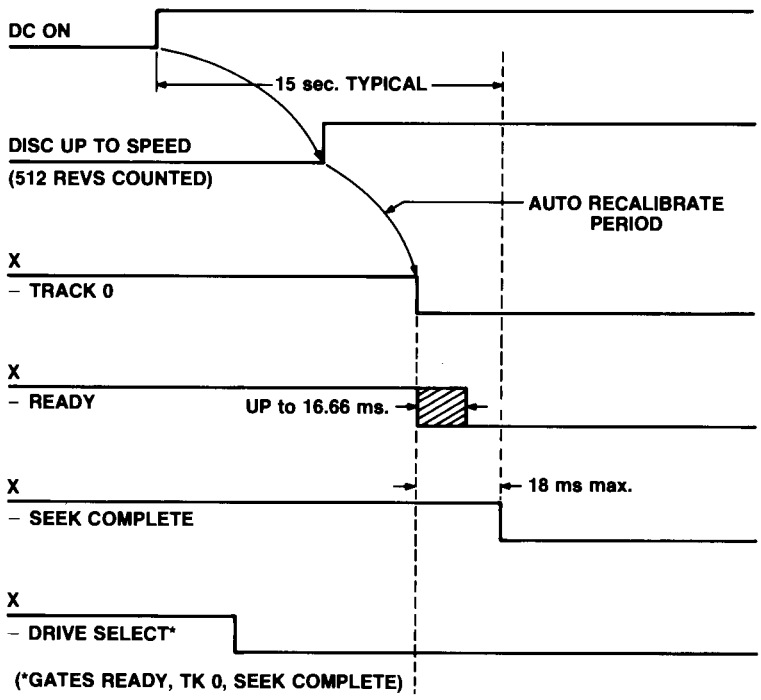

Figure 2-2. Power-Up Sequence

Track Accessing

Read/Write head positioning is accomplished by the following items after the drive is in the READY condition with SEEK COMPLETE true.

Deactivating the WRITE GATE line.
Activating the appropriate drive select line.
Selecting the appropriate direction.
Pulsing the STEP line.

Each step pulse causes the heads to move either in one track or out one track depending on the level of the DIRECTION line. A true on the DIRECTION line causes the heads to seek inward toward the spindle; a false causes a seek outward toward track 0 (outer edge of platter).

Head Selection
Any of the heads can be selected by placing the head's binary address on the two HEAD SELECT lines.

Read Operation
Reading data from a disc is accomplished by the following items after assuring the drive is READY.

Deactivating the WRITE GATE line.
Activating the appropriate DRIVE SELECT line.
Selecting the appropriate head.

Write Operation
Writing data onto the disc is accomplished by the following after assuring the drive is READY and that no write fault conditions exist.

Activating the appropriate DRIVE SELECT line.
Selecting the appropriate head.
Activating the WRITE GATE line and placing data on the WRITE DATA line.

Drive Electronics Theory of Operation

The drive electronics PCA contains the head select, read/write circuitry, and head positioning circuitry.

Two head select lines are used to select one of four heads. All four heads step simultaneously. Another head select line is used to deselect all four heads when a fault condition is detected.

The read circuitry amplifies the output of the selected read head, provides noise rejection, wave shaping, and outputs the differential read circuit voltages to the controller PCA.

The write circuitry accepts the differential write data voltage from the controller. The write circuitry is enabled by the WRITE GATE from the controller and provides the write current source. The WRITE CURRENT line selects the write current level . The write circuitry also provides precompensation to the write data.

The drive select allows up to four drives to be connected to a controller PCA. The select lines are wire-OR'ed so that the one drive is always selected.

The STEP and DIRECTION inputs to the head positioning circuitry from the controller PCA are converted to signals which drive the 2-phase stepper motor. The SEEK COMPLETE line then signals the controller PCA that the seek operation is completed. The READY line indicates to the controller that the motor speed is correct and that the head is ready. The DIRECTION line, during a step, is low when the heads step toward track 0 and pulses once for each track stepped. There is an optical sensor on the stepper motor which indicates when track 0 is detected. The INDEX signal is provided by a HALL-effect switch on the disc rotor.

The fault detect circuitry prevents writing and head-stepping activity when a fault condition is detected. The fault detect circuitry is enabled under the following conditions:

Power supplies are out of tolerance.
Multiple heads are selected.
No head selected.
WRITE CURRENT but with no WRITE GATE.
WRITE GATE but no WRITE CURRENT.

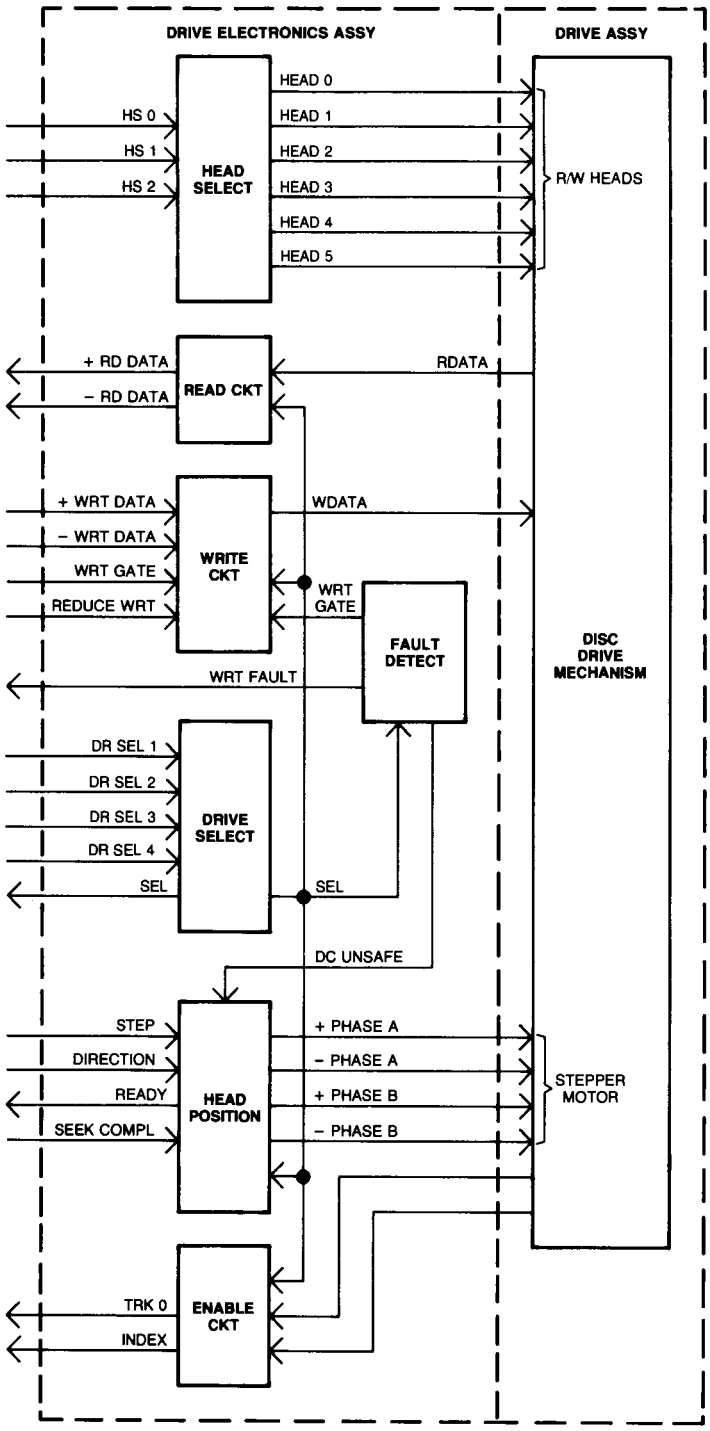

Figure 2-3. Winchester Drive Electronics PCA Block Diagram

Winchester Disc Drive Adjustments

There are three adjustments on the Winchester drive which may be performed in the field. They are as follows:

1. Brake adjustment (on earlier Winchester drives)
   This should be performed whenever:
   a. The Brake/Index assembly is replaced.
   b. The unit won't come READY (won't come up to speed).
   c. A squeal or rubbing noise is heard coming from the Winchester.

2. Index Sensor Adjustment
   This should be performed whenever:
   a. The brake is adjusted.
   b. Data errors occur frequently.
   c. Motor speed increases too rapidly.

3. Motor Speed Adjustment
   This should be checked and performed if necessary whenever data errors occur frequently.

Equipment Required

HP 5308A 75-MHz Timer/Counter or equivalent
5/64" Allen Wrench or Torx # 15
Feeler Gauge (0.010 in. and 0.030 in.)

Brake Adjustment (Earlier Winchester Drives)

To adjust the brake on the Winchester drive, first disconnect the disc memory from any AC power source. Refer to Chapter 2 of Section II and remove the top cover, Winchester controller PCA, Winchester drive assembly and drive electronics PCA. Place the drive assembly on a clean, dry surface bottom side up. Check the clearance between the drive hub and the brake pad and adjust if necessary for a clearance of 0.010 inch. To do this, loosen the two screws (A) shown in Figure 2-4, place the 0.010 inch feeler gauge between the hub and the brake pad and move the brake/index/ground assembly toward the hub until snug. Tighten the screws previously loosened and proceed to the index sensor adjustment.

Index Sensor Adjustment

To perform this adjustment, first disconnect the disc memory from any AC power source. Refer to Chapter 2 of Section II and remove the top cover, Winchester controller PCA, Winchester drive assembly and drive electronics PCA. Place the drive assembly on a clean, dry surface, bottom side up. Check and adjust the clearance between the index sensor and metal tab on the hub shown in Figure 2-5. Adjust the index sensor clearance by loosening the two screws shown in Figure 2-5 and inserting the 0.030 inch feeler gauge between the index sensor and the metal tab. Tighten the two retaining screws previously loosened. Reassemble the drive assembly.

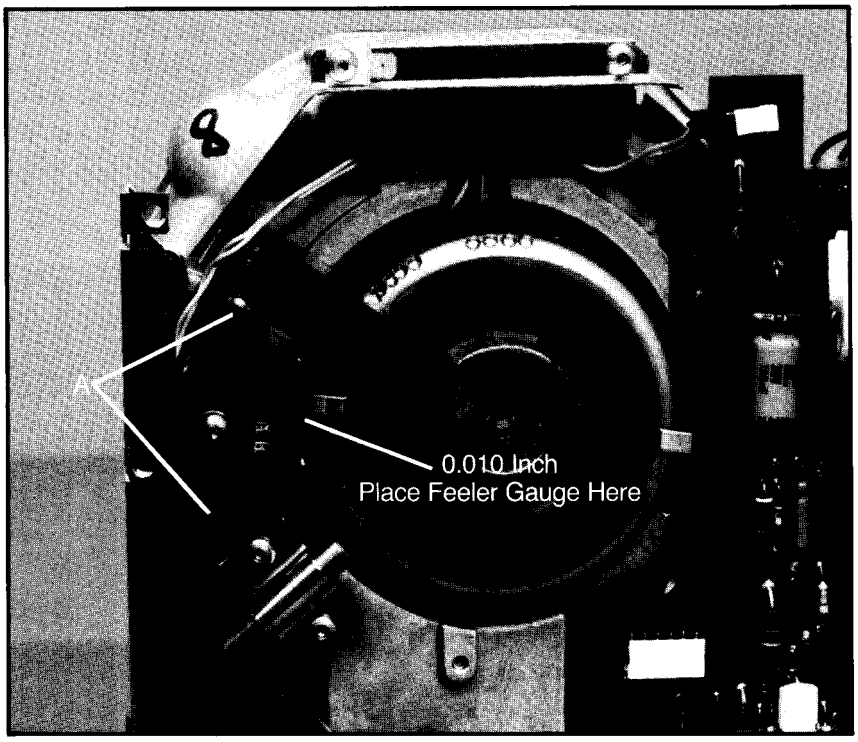

Figure 2-4. Brake/Index Assembly

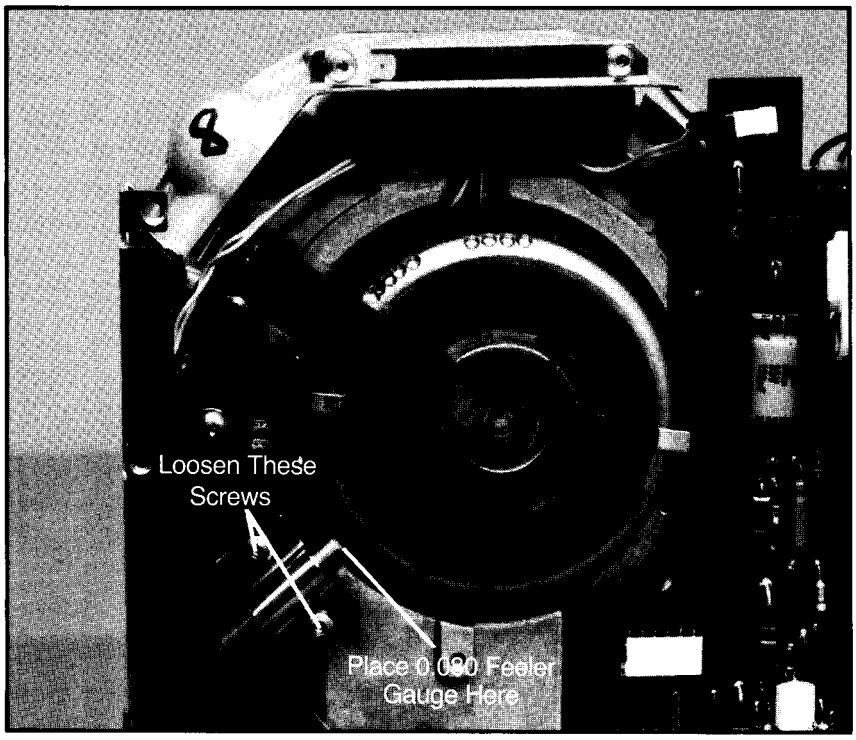

Figure 2-5. Index Sensor Adjustment

Motor Speed Adjustment

To adjust the motor speed on the Winchester drive, first disconnect the disc memory from any AC power source. Refer to Chapter 2 in Section II (Assembly Access) and remove the top cover, Winchester Controller PCA and Winchester drive support plate, leaving the drive attached to the support plate. Be sure to have the DC power connected to the Winchester drive electronics PCA. Carefully place the Winchester support plate on its side as shown in Figure 2-6.

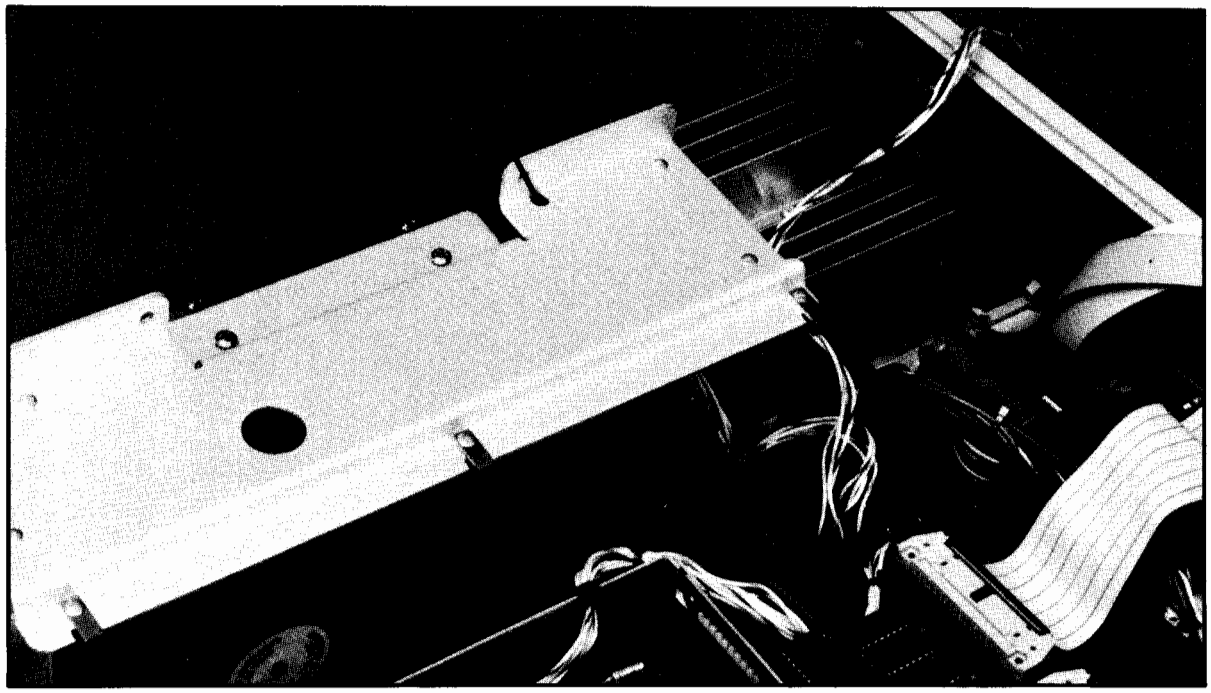

Figure 2-6. Winchester Motor Speed Adjustment Test Setup

Connect the 5308A as follows:
Channel B input to the Input Pulse test point
Ground to TP10

Set the controls on the 5308A as follows:

Trigger to (trigger on leading edge)
Attenuators to COM B
X1
AC
PER B
Time Base to 1 μS

Apply power to the Disc Memory

Observe the 5308A display and, if necessary, adjust the potentiometer shown in Figure 2-6 for a 0016666.6 uS period (± 1 % MAX.)

Disconnect all AC power and reassemble the unit.

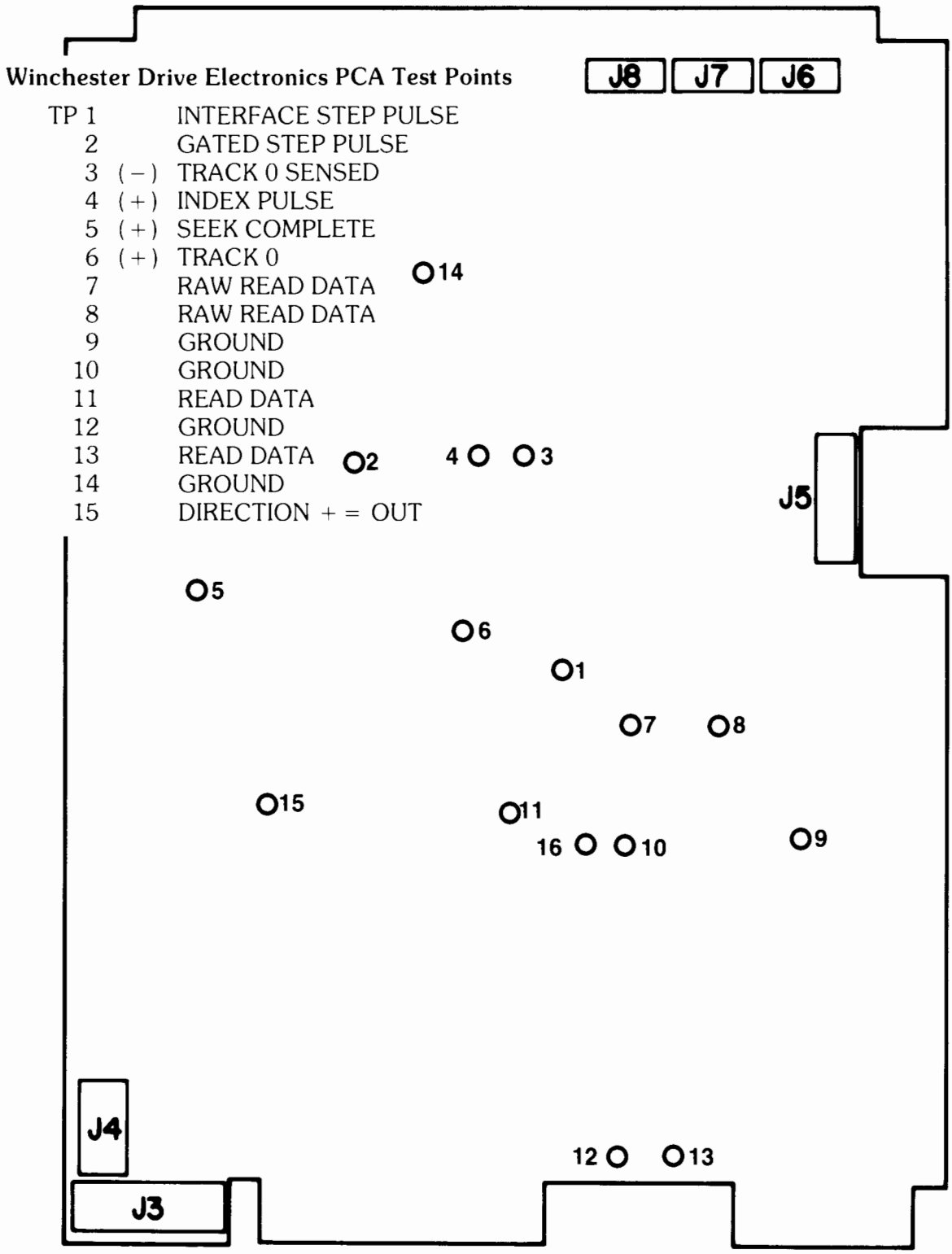

Figure 2-7. Drive Electronics PCA (P/N 09135-69502) Test Points and Connector Locations

Drive Electronics PCA - P/N 09133-69101 or 09133-69103

The following test point description along with the Figure 2-8 is presented as a troubleshooting aid in isolating the Drive Electronics assembly. The Drive Electronics assembly is used with the 406 drive. Check the part number of the Drive Electronics assembly to be sure you have the right assembly.

Test Point 3 (Track Zero Sensor)
Test Point 3 can be used to monitor the Track Zero sensor. A high logic level is a valid Track Zero indication.

Test Point 4 (Index Sensor)
The Point 4 can be used to monitor the Index Sensor. A high logic level is a valid Index indication. Only the leading edge of the pulse can be considered valid. The typical signal at Test Point 4 should resemble the signal shown in Figure 2-8.

Test Point 5 (Seek Complete)
Test Point 5 can be used to monitor the Seek Complete line. A high logic level is a valid Seek Complete indication.

Test Point 6 (True Track Zero)
Test Point 6 can be used to monitor the Track Zero signal that is gated to the host controller. A high logic level is a valid Track Zero indication.

Test Points 7 & 8 (Differential Read Filter)
Test Points 7 & 8 can be used to observe the differential read data. The typical amplitude of the signal resulting from adding the two channels is 300 millivolts. Test Point 9 should be used as ground to reduce noise.

Components of 1.25, 1.66, and 2.5 MHz should be observed. A full track record of high frequency data (0000 or 1111) should resemble the one shown in Figure 2-8.

Test Points 11 & 13 (Read Data)
Test Points 11 & 13 can be used to observe the Read Data from the Time Domain Filter. Trigger on Test Point 11 and monitor the delay at Test Point 13. Typically, the delay observed should be 50 nanoseconds. A full track record of high frequency data (0000 or 1111) should resemble the one shown in Figure 2-8.

Test Point 20 (5V Pullup)
Test Point 20 is a 5 volt pullup location. To use the pullup the line at J01 must be cut.

Test Point 9,10,12,14,15,16,21,22, & 23 (Convenience Grounds)
For any of the above functions, use the ground test point that is in the closest proximity to the active test point.

TEST POINT	DESCRIPTION
3	Track Zero Sensor
4	Index Sensor
5	Seek Complete
6	True Track Zero
7 & 8	Differential Read Filter
11 & 13	Read Data
20	5 Volt Pullup
9,10,12 14,15,16, 21,22,23	Convenience Gournd

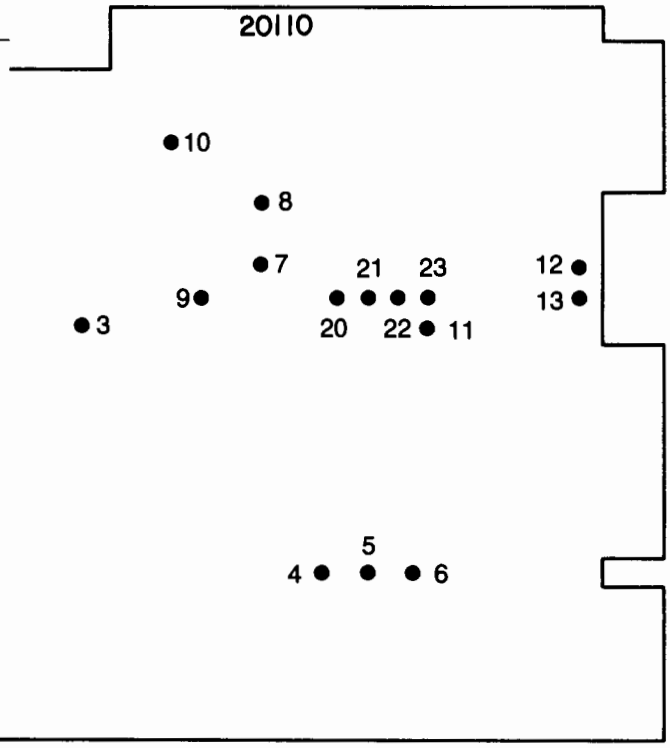

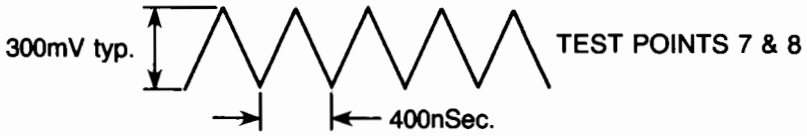

DIFFERENTIAL READ FILTER

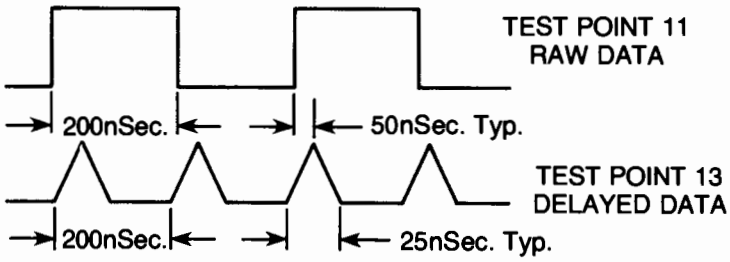

READ DATA

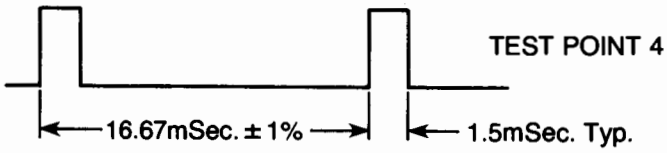

INDEX SENSOR

Figure 2-8. Drive Electronics PCA (P/N 09133-69101 or 09133-69103) Test Point Layout and Timing

Drive Electronics PCA - P/N 09133-69101 or 09133-69103

The following test point description along with Figure 2-9 is presented as a troubleshooting aid in isolating the Drive Electronics assembly. The assembly is used with the 412 drive. Check the part number of the drive electronics assembly to be sure you have the right assembly.

Test Points 1 & 2 (Differential Read Filter)

Test Points 1 and 2 can be used to observe the differential read data. The typical amplitude of the signal resulting from adding the two channels is 300 millivolts. Test Point 8 should be used as ground to reduce noise.

Components of 1.25, 1.66, and 2.5 MHz should be observed. A full track record of high frequency data (0000 and 1111) should resemble the one shown in Figure 2-9.

Test Point 3 & 4 (Read Data)

Test Points 3 and 4 can be used to observe the Read Data from the operation of the Time Domain Filter. Trigger on Test Point 3 and monitor the delay at Test Point 4. Typically, the delay observed should be 50 nanoseconds. A full track record of high frequency data (0000 or 1111) should resemble the one shown in Figure 2-9.

Test Point 5 (Track Zero Sensor)

Test Point 5 can be used to monitor the Track Zero sensor. A high logic level is a valid Track Zero indication.

Test Point 6 (Index Sensor)

Test Point 6 can be used to monitor the Index sensor. A high logic level is a valid indication. Only the leading edge of the pulse can be considered valid. The typical signal at Test Point 6 should resemble the one shown in Figure 2-9.

Test Point 6 can be used to adjust the spindle motor speed. Monitor Test Point 6 and adjust R3 on the Motor Control PCA (accessible through the side frame) for a period of 16.67 milliseconds, $\pm 1\%$.

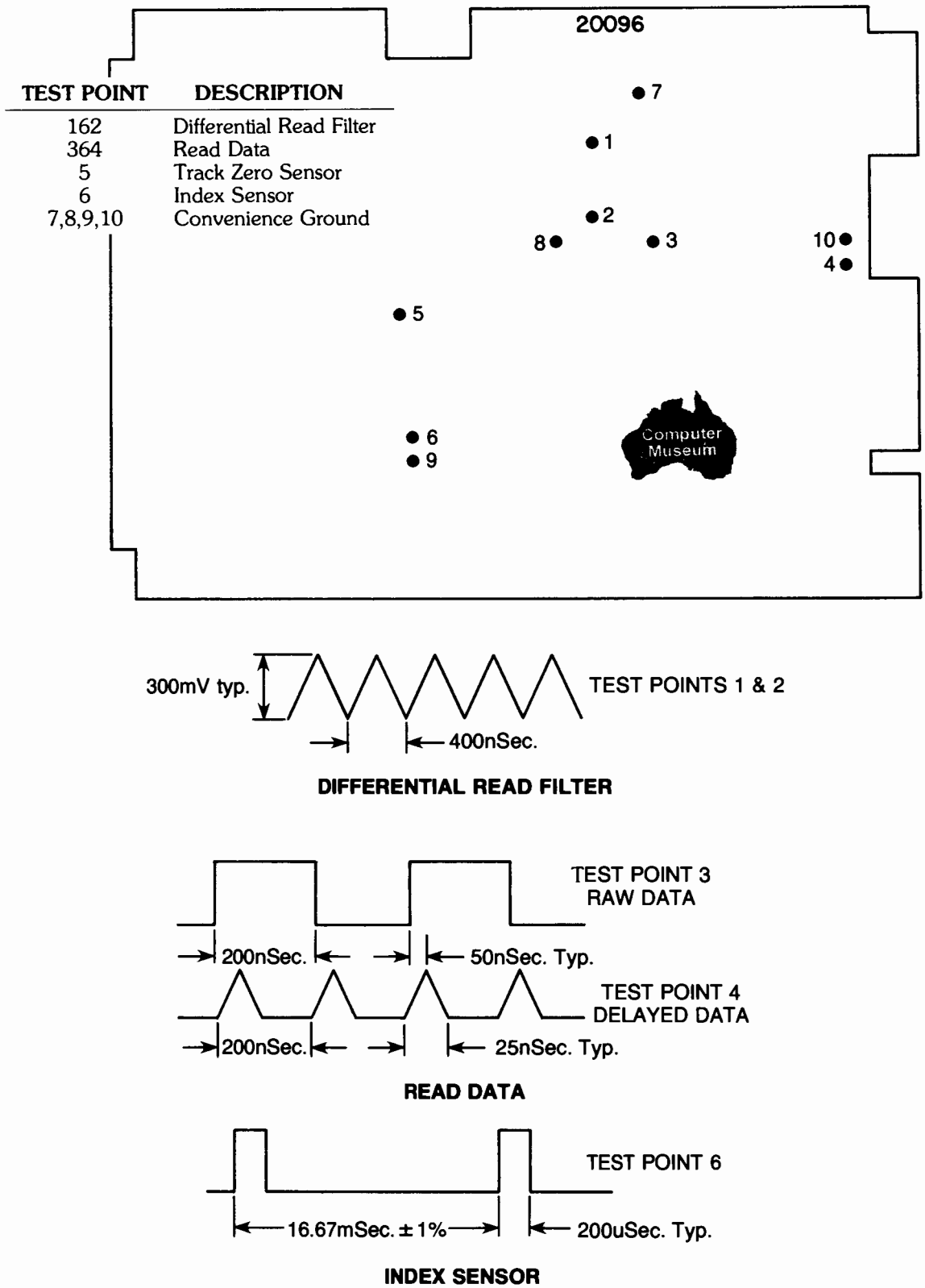

Figure 2-9. Drive Electronics PCA (P/N 09133-69101 or 09133-69103) Test Point Layout and Timing

Section II HP 9133A/B, 9134A/B & 9135A Disc Memory Products

Chapter 1
Theory Of Operation

- General Description
- Controller Theory of Operation
- Power Supply Theory of Operation
- Controller Selftests
- Controller Jumper Configuration

General Description

This section describes the HP Winchester Disc Drives Products. The A version of the product is a 5-Mbyte drive (9133A, 9134A, and the 9135A). These A versions can be configured for two types of software operation. These are shown next:

Standard - 4.6-Mbyte, 4-Volume ("D" Code)
Option 10 - 4.8-Mbyte, Single-Volume ("L" Code)

The B version of the same product is a 10-Mbyte drive (9133B or the 9134B). The B version of the 9135 Disc Drive was not produced.

The 5 1/4-inch Winchester disc drive contained in the 913XA products (See the following list) provides either 4.6 or 4.8 Mbytes of storage capacity depending upon which controller printed circuit assembly (PCA) firmware is installed. The firmware consists of an EPROM and Processor chip (on the original controller PCA) and is referred to as either the "D" code or the "L" code. The "D" code firmware causes the drive to appear as an HP 9895A Flexible Disc Drive master with three slave drives (1.15 Mbytes per volume) and the "L" code firmware causes the drive to appear as one large 4.8-Mbyte volume. The 4.8-Mbyte or "L" code version of the 913XA drives is ordered using option 010.

913XA/B Family

	A (5 Mbyte)	B (10 Mbyte)	3 1/2-inch Flexible Disc	5 1/4-inch Flexible Disc
HP 9133	X	X	X	
HP 9134	X	X		
HP 9135	X			X

The A versions of the 913X products are available with either the "D" or "L" code firmware. The B versions are only available with the "L" code firmware. The user's mainframe must have an operating system designed to support the selected "D" or "L" code version.

The original controller PCA installed in the 913XA products was designed and manufactured by Microcomputer Systems Corporation. It is not serviced by HP except for assembly replacement.

The latest controller PCA is designed and manufactured by HP and is installed in all current 913XA and B products. The "D" and "L" code operation is configured using jumpers on the PCA as well as the selection of 5, 10, and 15-Mbyte Winchester disc configuration.

The power supply PCA is designed to power all 913X products. It powers the Winchester drive, the Winchester controller PCA, a flexible disc drive, the flexible disc drive controller PCA and an I/O assembly. The I/O assembly is contained on the same PCA as the power supply.

Product Configuration

The following tables list the firmware by part number for the different product configurations as well as the jumper positions for the 10-Mbyte drive.

Table 1-1. Product Configuration

Product	Drive	Drive Electronics	Controller	Processor-IC	ROM-IC
HP 9133					
A	09135-69600	09135-69502	09135-69515	09135-85500	09135-85501
A#10	9135-69600	09135-69502	09135-69501	88134-85500	88134-85501
After SN 2239A01446 model A and A Option10 change to the following:					
	09133-69100	09133-69103	09133-69514	N/A	N/A
B	09133-69102	09133-69101	09133-69514	N/A	N/A
HP 9134					
A	09135-69600	09135-69502	09135-69515	09135-85500	09135-85501
A#10	09135-69600	09135-69502	09135-69501	88134-85500	88134-85501
After SN 2203A03086 model A and A Option 10 change to the following:					
	09133-69100	09133-69103	09133-69514	N/A	N/A
B	09133-69102	09133-69101	09133-69514	N/A	N/A
HP 9135					
A	09135-69600	09135-69502	09135-69515	09135-85500	09135-85501
A#10	09135-69600	09135-69502	09135-69501	88134-85500	88134-85501
After SN 2151A04165 model A and A Option 10 change to the followng:					
	09133-69100	09133-69103	09133-69514	N/A	N/A
HP 250					
20	09135-69600	09135-69502	88134-69910	88134-85500	88134-85501
After SN xxxxxxxxxx model 20 changes to the following:					
	09133-69100	09133-69103	09133-69514	N/A	N/A
25	09133-69102	09133-69101	09133-69514	N/A	N/A
HP 9000					
20	09855-69963	N/A	09855-69886	N/A	N/A

Jumper Configuration for the 09133-69514 controller assembly appears in the next table:

Table 1-2. 10-Mbyte Jumper Configuration

Product	Jumpers 10M	One Volume	4XX
9133A	Removed	Removed	Installed
Option 10 9133A	Removed	Installed	Installed
9133B	Installed	Installed	Installed
9134A	Removed	Removed	Installed
Option 10 9134A	Removed	Installed	Installed
9134B	Installed	Installed	Installed
9135A	Removed	Removed	Installed
Option 10 9135A	Removed	Installed	Installed

Removing the 10M jumper indicates a 5-Mbyte drive and removing the One-Volume jumper indicates the 4-Volume configuration. The 4XX drive refers to the ST406 and ST412 drives. The 4XX jumper removed indicates the ST506 Dual-Platter drive. The ST506 Dual-Platter drive uses the MSC controller (88134-69910, 09135-69515, and 09135-69501). See the next section.

The platter configurations (dual and single) of the drives that are used in the 913X products appear next:

ST506 - Dual Platter 5-Mbyte (early units)
ST406 - Single Platter 5-Mbyte (improved track density)
ST412 - Dual Platter 10-Mbyte (improved track density)

Winchester Controller PCA Theory of Operation (88134-69910, 09135-69515, and 09135-69501)

There are two sets of firmware available. They are the "D" code and "L" code PROM's with the appropriate processor chip which contains onboard ROM. The "D" code firmware emulates 9895A drives (four volumes) and the "L" code firmware (used on the HP 250) causes the Winchester to appear as one 4.8-Mbyte volume. In the case of the "L" code firmware, the read/write heads access 153 (0-152) tracks of each disc surface. The following controller PCA have been used on the 5-Mbyte drives.

P/N 88134-69910 "L" Code - HP 250 Model 20
P/N 09135-69515 "D" Code - 4-Volume 5-Mbyte
P/N 09135-69501 "L" Code - Single-Volume 5-Mbyte

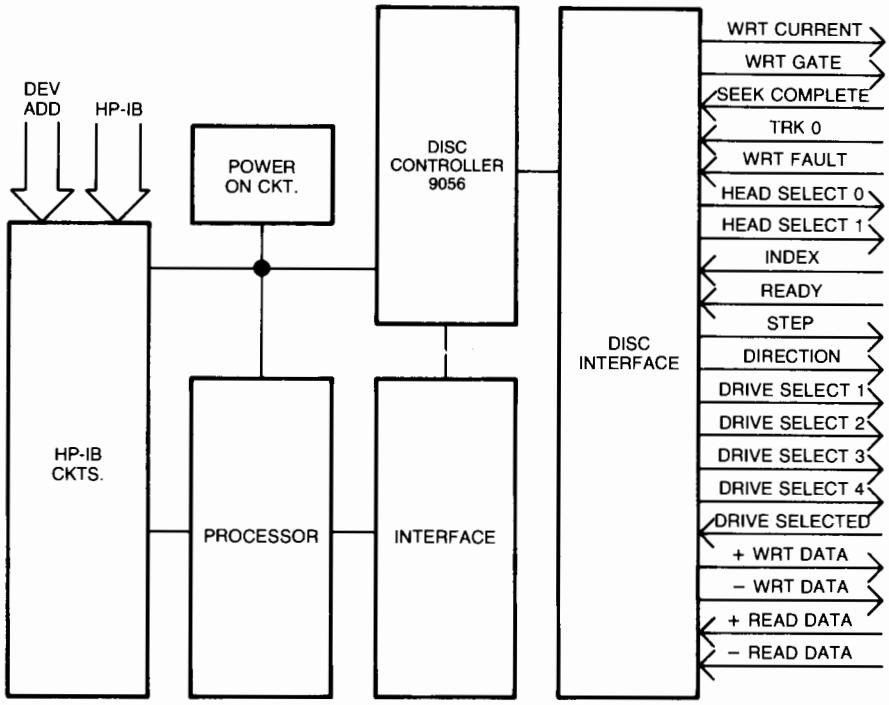

Figure 1-1. Winchester Controller Block Diagram

The power-on circuit resets the processor, HP-IB circuit and the 9056 module (the large black module attached to the Winchester controller PCA). All data transfers between the HP-IB and the internal data bus are controlled by the processor. The HP-IB bus controller (9914 HP-IB chip) manages the data transfers across the HP-IB channel.

The 9056 module provides data buffering and management, status checking and control of the drive assembly, head selection, head positioning and verification, write fault monitoring, error detection (up to 22-bit bursts), error correction (up to 11-bit bursts), WRITE GATE enable, and WRITE CURRENT level switching.

Controller Theory of Operation (09133-69514)

The controller PCA is designed to interface the 5-Mbyte single-platter and the 10-Mbyte dual-platter versions of the Winchester drives to the mainframe. Jumpers are used to tailor the controller to the Winchester drive. These jumpers select the Winchester drive capacity and configure for either single-volume or four-volume operation (5-Mbyte drives only). The following controller PCA have been used on the 5 and 10-Mbyte drives.

P/N 09133-69514 5/10-Mbyte - Jumper Selectable

Refer to the block diagram of Figure 1-2 while reading the following.

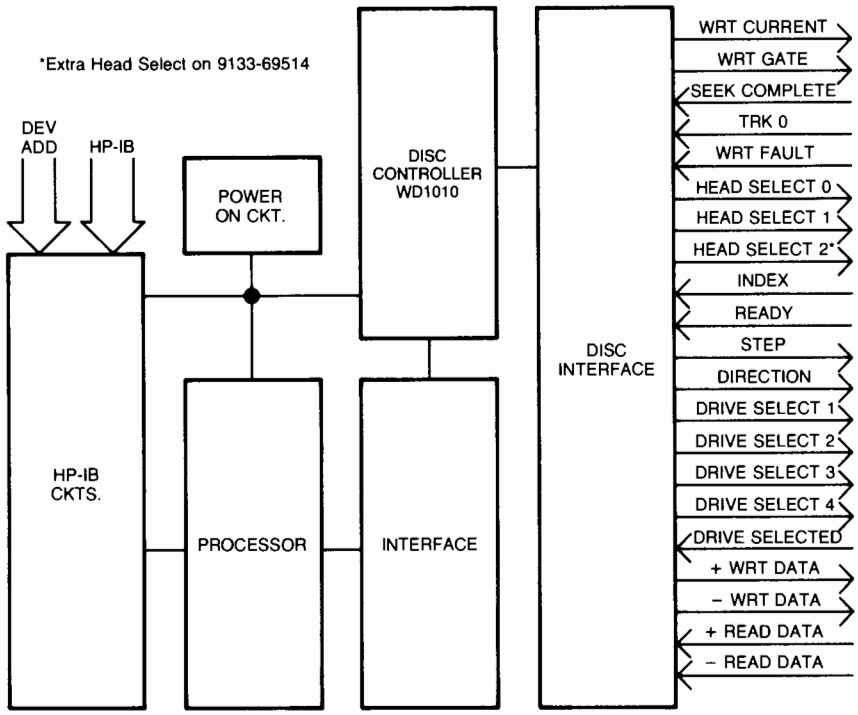

Figure 1-2. Controller Block Diagram

Microprocessor Circuit

The microprocessor is a 68B09 8-bit processor with a 2-MHz bus rate. Timing is provided by an internal oscillator which drives an 8-MHz crystal. The output of the oscillator is divided by four to provide 2-MHz signals (E and Q). The signals are phase shifted 90 degrees with respect to each other, so that Q leads E. The address present on the address bus is valid whenever either E or Q is high.

Program memory for the microprocessor is stored in an 8-Kbyte ROM. The ROM is selected whenever address line A15 is high and the VMA (valid memory address = E + Q) is high.

Scratch-pad memory for the processor consists of 128 bytes of RAM. The RAM is selected by three of the chip select lines provided on the chip. The condition necessary to select the RAM is A15 low and A07 high and E high.

Disc Controller, HP-IB Chip, Input and Output Ports

The disc controller, HP-IB chip (8291A) and input and output ports are selected by strobe lines from a 3-line to 8-line decoder. The decoder is selected when VMA = Q + E and the ROM is not selected (A15 low). When the decoder is selected, one of the 8 output lines is pulled low depending on the sense of address lines A05, A06, and A07. The four outputs that correspond to A07 being 1 are not used since the RAM is addressed when this occurs.

The input port is 8 bits wide. The bit assignments are as follows:

BIT 7--Not Used
BIT 6--LED_ON_L (CURRENT STATE OF SELFTEST LED)

BIT 5--5_H/10_L (5 OR 10 MBYTE DRIVE)
BIT 4--D_H/L_L (SINGLE VOLUME OR 9895 A LOOK-ALIKE)
BIT 3--5XX_L/4XX_H
BIT 2--ADDR2_L (MSB OF HP-IB ADDRESS)
BIT 1--ADDR1_L
BIT 0--ADDR0_L (LSB OF HP = IB ADDRESS)

The output port is 8 bits wide. The bit assignments are as follows:

BIT 7--BUFFER_READY_H
BIT 6--LED_ON_L
BIT 5--NOT CONNECTED
BIT 4--NO ASSIGNMENT
BIT 3--PRE_COMP_DISABLE_H
BIT 2--BUFFER_COUNTER_CLEAR_L
BIT 1--NOT CONNECTED
BIT 0--WD_RESET_L

The disc controller chip provides most of the control signals needed by the drive. It communicates with the microprocessor through 7 input and output registers and an external RAM buffer. The disc controller chip keeps track of which cylinder the head is positioned over, and when it is necessary to move the head. It controls the direction line and issues the appropriate number of step pulses. It also does the parallel-to-serial conversion, MFM encoding, and generates the precomp control signals necessary for a write operation. On a read operation, the disc controller chip does the MFM decoding, and the serial-to-parallel conversion. The disc controller chip also provides verification of sector headers, control of the phase-lock loop, checking of the error detecting CRC bytes, and automatic initiation of up to 8 retries if an error is detected.

The data separator reconstructs the clock from the incoming MFM-encoded bit stream and generates a 5-MHz clock with phase relationship to the incoming data such that nominal data transitions are centered on one level of the read clock and nominal clock transitions are centered on the other level. The read clock is generated by dividing down a 10 MHz clock that is phase locked to a delayed copy of the incoming data. The phase-lock loop uses a digital phase detector whose output is pump-up or pump-down pulses with a pulse width proportional to the phase error. The phaseup line is provided to allow the VC0 (Voltage Controlled Oscillator) to be started up in phase with the incoming data signal to minimize lock-up time.

Power Supply Theory of Operation

Refer to the power supply schematic diagram (Chapter 4, Section II) while reading the following text. The regulated DC voltages provided by the power supply are +5 VDC, +12 VDC, and -5 VDC. Regulation for the +5 VDC and +12 VDC is accomplished by two differential amplifiers U2B and U2D.

The secondary voltages are rectified by three full-wave bridge networks and applied to the collectors of three series pass transistors Q1, Q6, and Q7.

Voltage Reference Circuit

The voltage at the emitter of Q1 is applied to the inverting input of U2A, so that if the emitter voltage of Q1 ("1") decreases, the output of U2A goes positive. This increases conduction of Q1 and thereby increases the emitter voltage.

Regulators +5 VDC and +12 VDC

Action of the +5 VDC regulator and +12 VDC regulator is the same as that of U2A/Q1. Darlington transistor configurations are used at the outputs of the +5 VDC and +12 VDC regulators to increase their current handling capabilities.

The zener diodes at the outputs of the +5 VDC, +12 VDC and –5 VDC regulators provide protection, should the voltage levels at those points exceed the voltage ratings of the zener diodes. If this should happen, the zeners will short out and open the fuse. Check the zeners with an ohmmeter to find which has shorted and replace the faulty zener and the fuse before re-applying power. The fuse won't blow if the zener on the –5 VDC line shorts because the –5 VDC regulator is current limited.

VREF Circuit

The reference voltage (VREF) applied to pins 3, 5 and 12 of U2 is held at +5.1 VDC by zener diode CR1 and filtered by capacitor C2.

Crowbar Circuit

The purpose of this circuit is to blow the primary fuse if the device is connected to 220 VAC or 240 VAC and the voltage select switches are set to 110 or 120 VAC position.

The Crowbar circuit consists of a 30V zener diode CR6, SCR CR5 and associated circuitry. When the voltage at the cathode of CR6 exceeds 30 VDC, the diode conducts to increase the voltage on the gate of SCR CR5. In turn CR5 conducts very heavily and shorts the output of the bridge to ground. This will in turn blow the fuse, F1, in the primary circuit (only if the proper fuse is installed).

WARNING

IT IS IMPORTANT THAT THE PRIMARY FUSE F1 IS THE CORRECT RATING. CHECK THE PRIMARY FUSE FOR THE CORRECT RATING WHEN SERVICING THE UNIT.

Controller Selftests (88134-69910, 09135-69515, and 09135-69501)

The Winchester controller PCA is equipped with a selftest switch and status LED. The selftest switch is located on the component side of the board near its rear edge (see Figure 1-3).

The tests performed during the selftest of the Winchester are as follows:

1. Power On Selftest - Verifies track 0/sector 0
2. Format Status - Tests hardware operation

3. Read/Write - Writes to, then Reads from the maintenance track.

While the Winchester selftest is being executed, the status LED located on the component side of the PCA flashes. If the selftest passes without error, the status LED is brightly lit. If an error condition is detected, the LED is dimly lit or off.

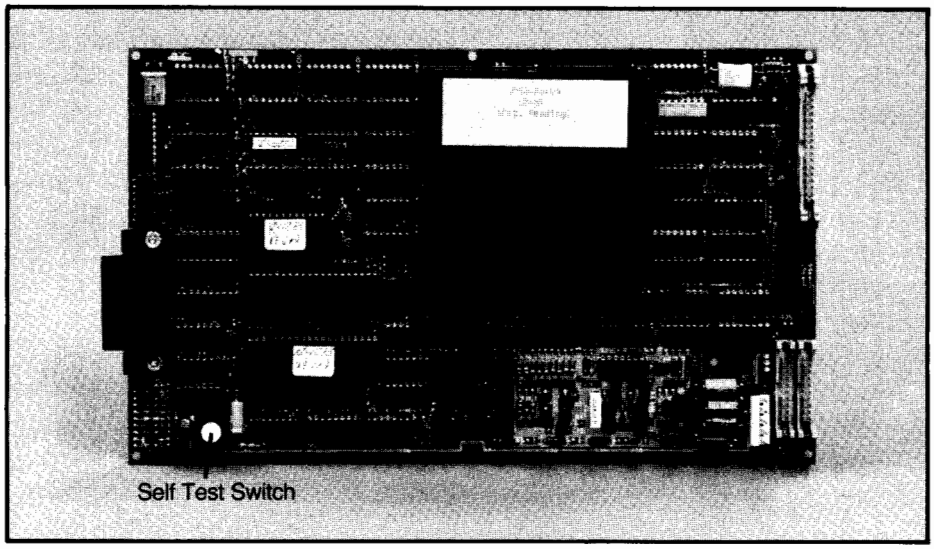

Figure 1-3. Selftest Switch

Controller Selftests (09133-69514)

There are two selftest procedures provided on this controller PCA. They are the Power-on Selftest, and Initiate Selftest command issued from the mainframe. The Power-on Selftest is not identical to the selftest done in response to the Initiate Selftest command. Some continual selftesting is also done during normal command execution. See the Initiate Selftest command description for details on all of these modes of selftest.

Selftest Results

The selftest results are two bytes that describe the most recently detected hardware error. These bytes are cleared when the Read Selftest command is executed.

The format of the two bytes is:

E 0 U U 0 H H H
C C C C C C C C

where: E is a bit indicating that an error was detected
UU gives the current unit when the error was detected
HHH gives the head selected when the error was detected
CCCCCCCC is an error code describing the failure

If the E bit is zero (no error), then both bytes are zero.

Controller (P/N 09133-69514) Jumper Configurations

The Winchester controller PCA (P/N 09133-69514) can be configured to interface the following three versions of the Winchester drive.

- Single-Platter 5-Mbyte drive
- Dual-Platter 10-Mbyte drive

The single-platter 5-Mbyte can be configured to appear as either a single 4.8-Mbyte volume or as a four-volume (1.15 Mbyte per volume - 9895A master with three slave drives). The dual-platter 10-Mbyte drive can be configured only as one large 10-Mbyte volume. Jumpers are plugged onto pins of J6 and the configurations are as follows. Also see Figure 1-4. "The 09133-69514 Controller PCA".

J6 Pins	Configuration
00 00 00	Not Assigned
00 00 XX	Single-Platter 5-Mbyte 4-Volume
00 XX 00	Not Assigned
00 XX XX	Single-Platter 5-Mbyte Single-Volume
XX 00 00	Not Assigned
XX 00 XX	Not Assigned
XX XX 00	Not Assigned
XX XX XX	Dual-Platter 10-Mbyte Single-Volume

Legend

XX -- 10 Mbyte
XX -- One Volume
XX -- 4XX Drives

XX = jumper installed
00 = jumper not installed

Controller PCA Test Point Location and Waveform Description

Test point location and waveform description found at these test points are presented to assist you in isolating troubles which may be either in the Winchester drive or controller PCA.

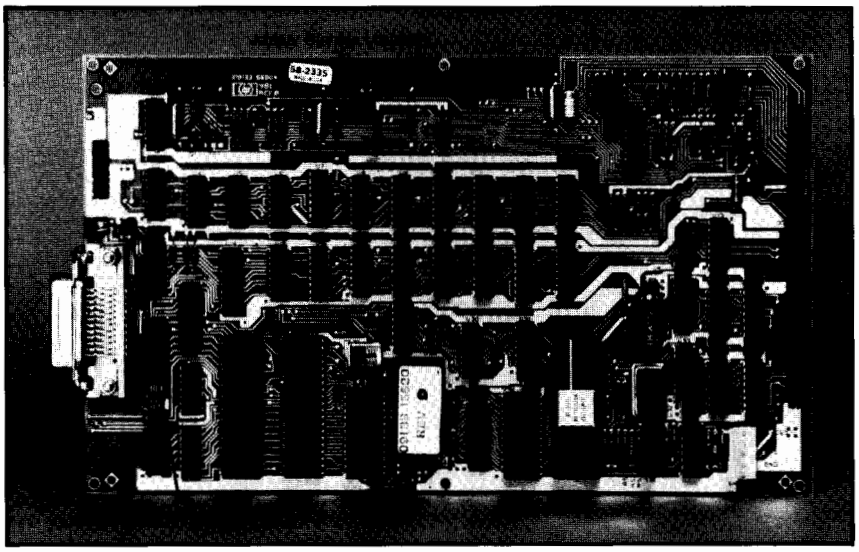

Figure 1-4. The 09133-69514 Controller PCA

Test Point	Signal Name	Waveform Description
TP GND	GROUND	
TP2	DELAYED DATA	TTL wave (4VPP) at approximately 10 MHz with leading edge in phase with leading edge of reconstructed clock signal.
TP4	RECONSTRUCTED CLOCK	Square wave TTL signal in phase with delayed data.
TP5	ERROR VOLTAGE	
TP6	RAW DATA	Positive TTL signal approximately 0.4 milliseconds in duration.
TP7	PRECOMPENSATED WRITE DATA	Negative TTL signal approximately 0.4 milliseconds in duration.
P9	SEEK COMPLETE	+ 4 VDC level after seek complete.
TP10	TRACK 00	+ 4 VDC level after reaching track 00
TP11	WRITE FAULT	Normally low.
TP12	INDEX	Positive going TTL square wave approximately 2.2 milliseconds in duration.
TP13	READY	Normally + 4 VDC
TP14	STEP	
TP15	WRITE GATE	Normally + 4 VDC. Low for approximately 400 microseconds when writing data.
TP16	VMA	2 MHz clock.

Chapter 2
Assembly Access

- Introduction
- Safety Considerations
- Assembly Access

Introduction

This chapter provides information for disassemby and reassembly of the Winchester disc drive within the HP 913X disc memories. An exploded view is also provided with the instructions. Disassembly procedures are given only for the exchange items. The exploded view which appears in this chapter also appears in Chapter 3, the replaceable parts section, with the parts list appearing in disassembly order and all replaceable parts keyed with item numbers. Be sure to retain any unmentioned hardware when disassembling the disc memories for reassembly.

The disassembly procedure for the 5 1/4 flexible disc drive is presented after the Winchester drive section. This is for the 9135A only. All information on the 3 1/2-inch flexible disc drive included in the 9133A/B products is found in the 3 1/2-inch service manual (P/N 09121-90030).

WARNING

REMOVE POWER TO THE DISC MEMORY BEFORE REMOVING ANY ASSEMBLY.

NOTE

Unless otherwise indicated in the procedures, the disc memory assemblies are installed by reversing the procedures given for their removal.

The following tools are required for disassembly and reassembly of the disc memories.

1 Posidrive Screwdriver
2 Posidrive Screwdriver
5/64" Allen Wrench or Torx # 10 (the later drives use the Torx)
Needlenose Pliers
Small Flat-blade Screwdriver

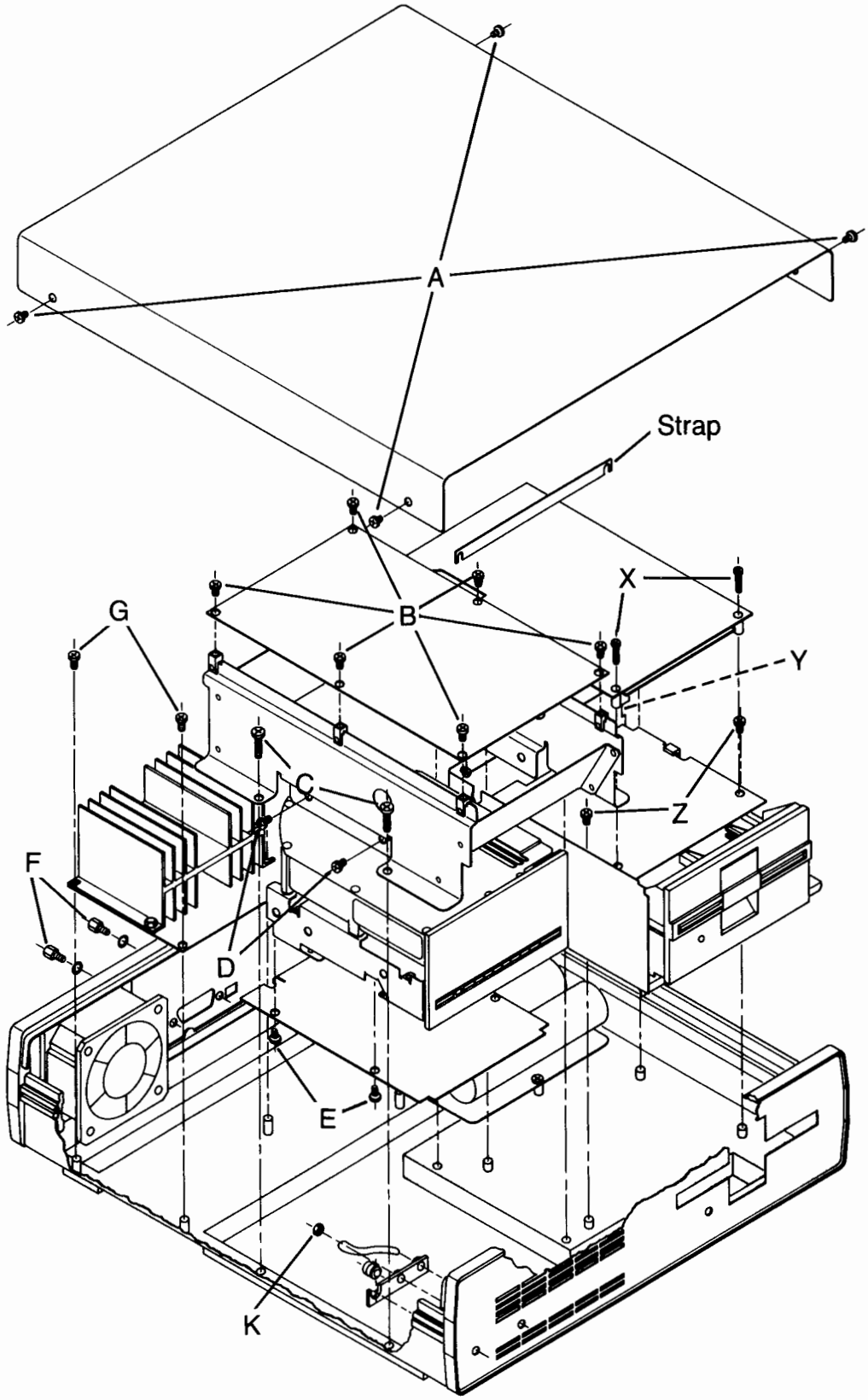

Figure 2-1. HP 913X Disc Memory Exploded View

Safety Considerations

General

This product and related documentation must be reviewed for familiarization with safety markings and instructions before operation.

Safety Symbols

Instruction manual symbol: the product will be marked with this symbol when it is necessary for the user to refer to the instruction manual in order to protect the product against damage.

Indicates hazardous voltages.

Indicates earth (ground) terminal (sometimes used in manual to indicate circuit common connected to grounded chassis.

WARNING

The WARNING sign denotes a hazard. It calls attention to a procedure, practice, or the like, which, if not correctly performed or adhered to, could result in injury. Do not proceed beyond a WARNING sign until the indicated conditions are fully understood and met.

CAUTION

The CAUTION sign denotes a hazard. It calls attention to an operating procedure, practice, or the like, which if not correctly performed, could result in damage to, or destruction of, part or all of the product. Do not proceed beyond a CAUTION sign until the indicated conditions are fully understood and met.

Safety Earth Ground

This is a safety class I product and is provided with a protective earthing terminal. An uninterruptible safety earth ground must be provided from the main power source to the product input wiring terminals, power cord, or supplied power cord set. Whenever it is likely that the protection has been impaired, the product must be made inoperative and be secured against any unintended operation.

Before Applying Power

Verify that the product is configured to match the available main power source per the input power configuration instructions provided in this manual, and that the correct primary fuse rating is installed.

If this product is to be energized via an auto-transformer (for voltage reduction), make sure the common terminal is connected to the earth terminal of the main power source.

Servicing

Any servicing, adjustment, maintenance or repair of this product must be performed only by service-trained personnel.

Adjustments described in this manual may be performed with power supplied to the product while protective covers are removed. Energy available at many points may, if contacted, result in personal injury.

Capacitors inside this product may still be charged even when the product is disconnected from its power source.

To avoid a fire hazard, only fuses with the required current rating and of the specified type (normal blow) are to be used for replacement.

Top Cover Removal

To access the internal assemblies, the top cover must first be removed. Remove the four screws (Labeled A in Figure 2-1) and lift the top cover. Next remove the hex nut securing the ground strap to the cover and lift the cover off.

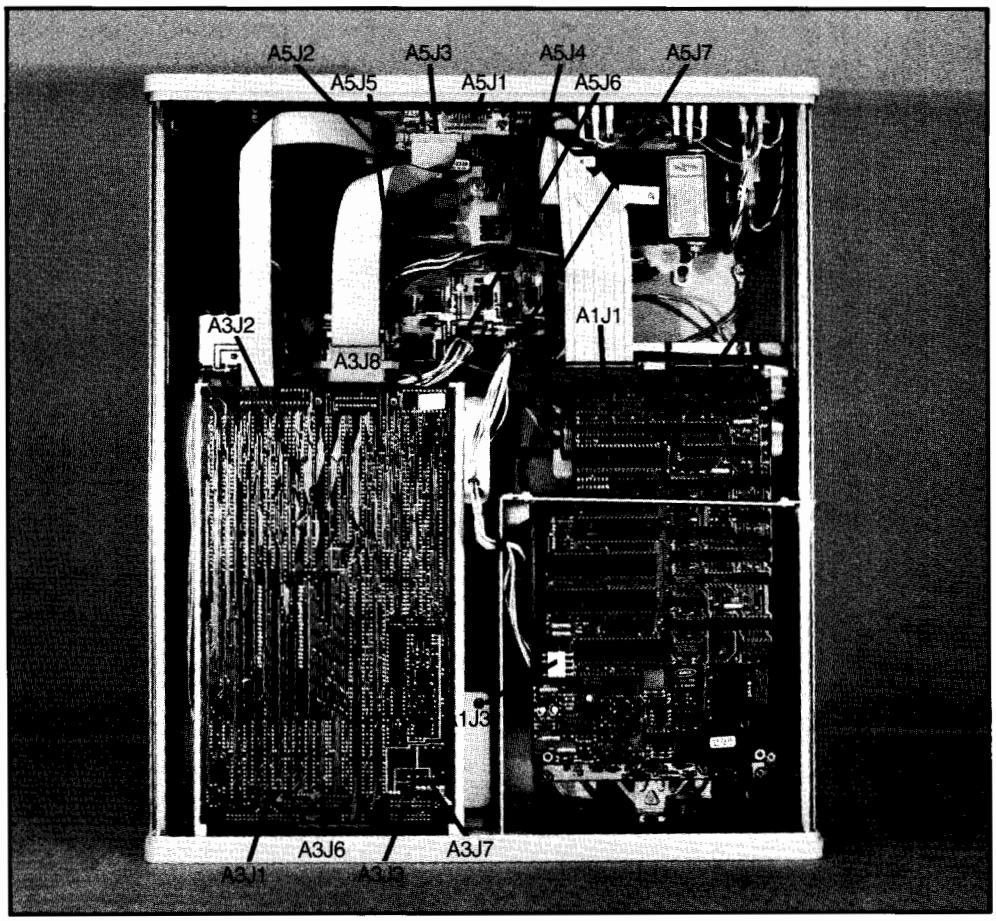

Figure 2-2. Connector Locations

CAUTION

CAUTION MUST BE USED WHEN REINSTALLING CONNECTORS ON THE POWER SUPPLY PCA. IT IS POSSIBLE TO INSERT THE CONNECTORS IN THE WRONG POSITIONS. REFER TO FIGURE 2-2 FOR THE CORRECT POSITIONS FOR THE CONNECTORS.

Winchester Disc Drive Controller PCA Removal

The Winchester controller PCA does not have to be removed to gain access to the Winchester drive or its electronics PCA.

The controller PCA is removed by completing the following steps. First remove the power connector A5J6 from the power supply PCA. Next remove the six screws (Labeled B in Figure 2-1) and lift the PCA upward. Rotate the controller PCA onto its side. Remove the power connector (A3P6) and the ribbon cable connectors (A3P1 and A3P8).

CAUTION

IT IS POSSIBLE TO INSERT THE POWER CONNECTOR (A3P6) AND RIBBON CABLE CONNECTOR (A3P8) ON THE WINCHESTER CONTROLLER PCA IMPROPERLY. BE CAREFUL WHEN REPLACING THESE CONNECTORS. REFER TO FIGURE 2-3 FOR CORRECT INSTALLATION OF THE CONNECTORS.

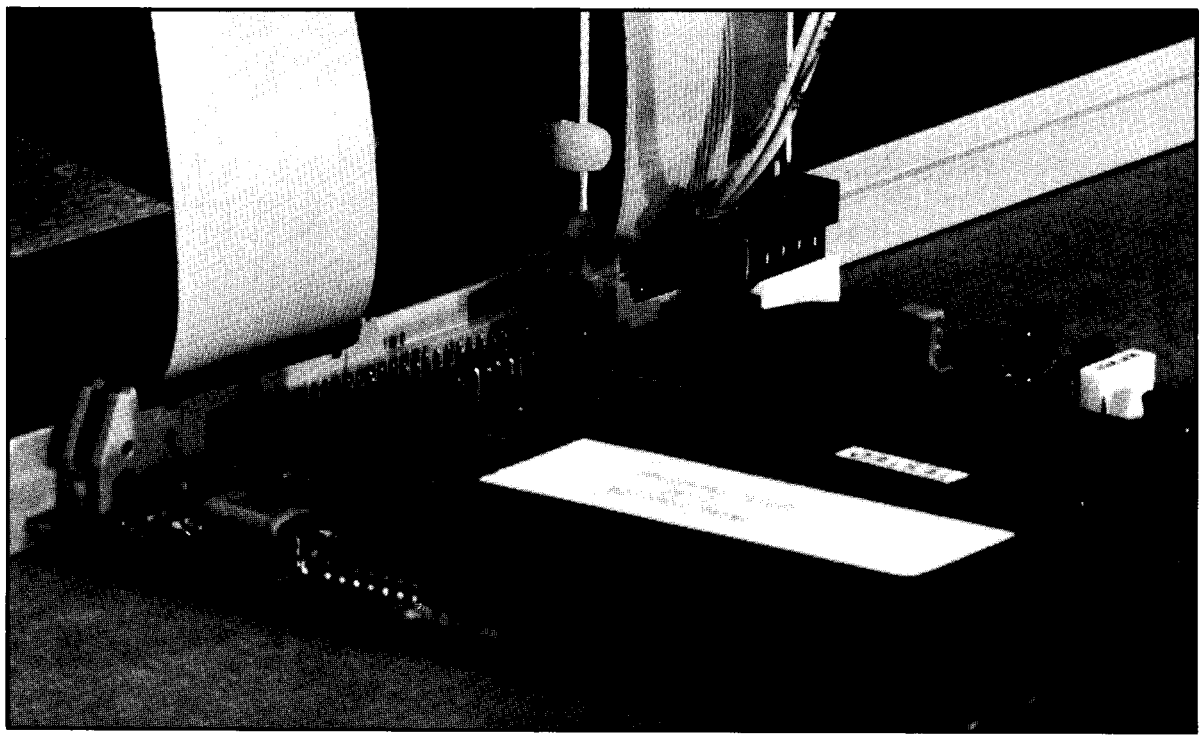

Figure 2-3. Winchester Controller PCA Connectors.

Drive Assembly Removal

The Winchester disc drive support bracket must first be removed to gain access to the drive. To do this, remove the power connector (A5P6) on the power supply board. Remove the four screws (Labeled C in Figure 2-1) holding the support bracket to the chassis.

To remove the Winchester disc drive assembly from the support bracket, remove the four screws (D, two from each side) and carefully slide it out of the bracket.

Drive Electronics PCA Removal

To remove the drive electronics PCA from the Winchester disc drive assembly, remove the ribbon cable connectors (A3P1 and A3P2). Turn the unit over and carefully remove the connectors A4A1P4, P5, P6, P7, and P8. Using a 5/64" Allen Wrench or Torx # 15, remove the four screws (Labeled E in Figure 2-1) and slide the PCA out.

Power Supply PCA Removal

To remove the power supply PCA, remove connectors A5P1, A5P2, A5P3, A5P4, and A5P5. Remove the two HP-IB plate screws (Labeled F in Figure 2-1) and the four screws (Labeled G in Figure 2-1) and lift the power supply board out of the chassis.

NOTE

The HP-IB connector screws are easily broken during removal and reinstallation of the power supply PCA. Use caution when removing and reinstalling them.

Front Panel Removal

To remove the front panel, first remove the power indicator LED by prying the LED retainer ring from around the LED holder. Remove the light pipe holder by removing nut (K). Next remove the six nuts which hold the front panel in place. Carefully slide the front panel outward.

Rear Panel Removal

The rear panel can be removed with or without the components attached to it. The voltage select switches are held in place by two screws and two nuts each. The power switch is pressed in from the outside, so that the wires attached to it must be removed prior to pressing it out. The fan is held in place by two nuts. The line filter is held in place by two nuts. The rear panel can be removed by removing the six nuts around the inside of the rear panel.

Bottom Panel Removal

The power transformer can be removed at this time. The power transformer is held in place by four screws. The bottom panel can now be removed by removing its four screws.

Front and Rear Panel Bezel Removal

The front and rear panel bezels are held to the side rails by four screws each.

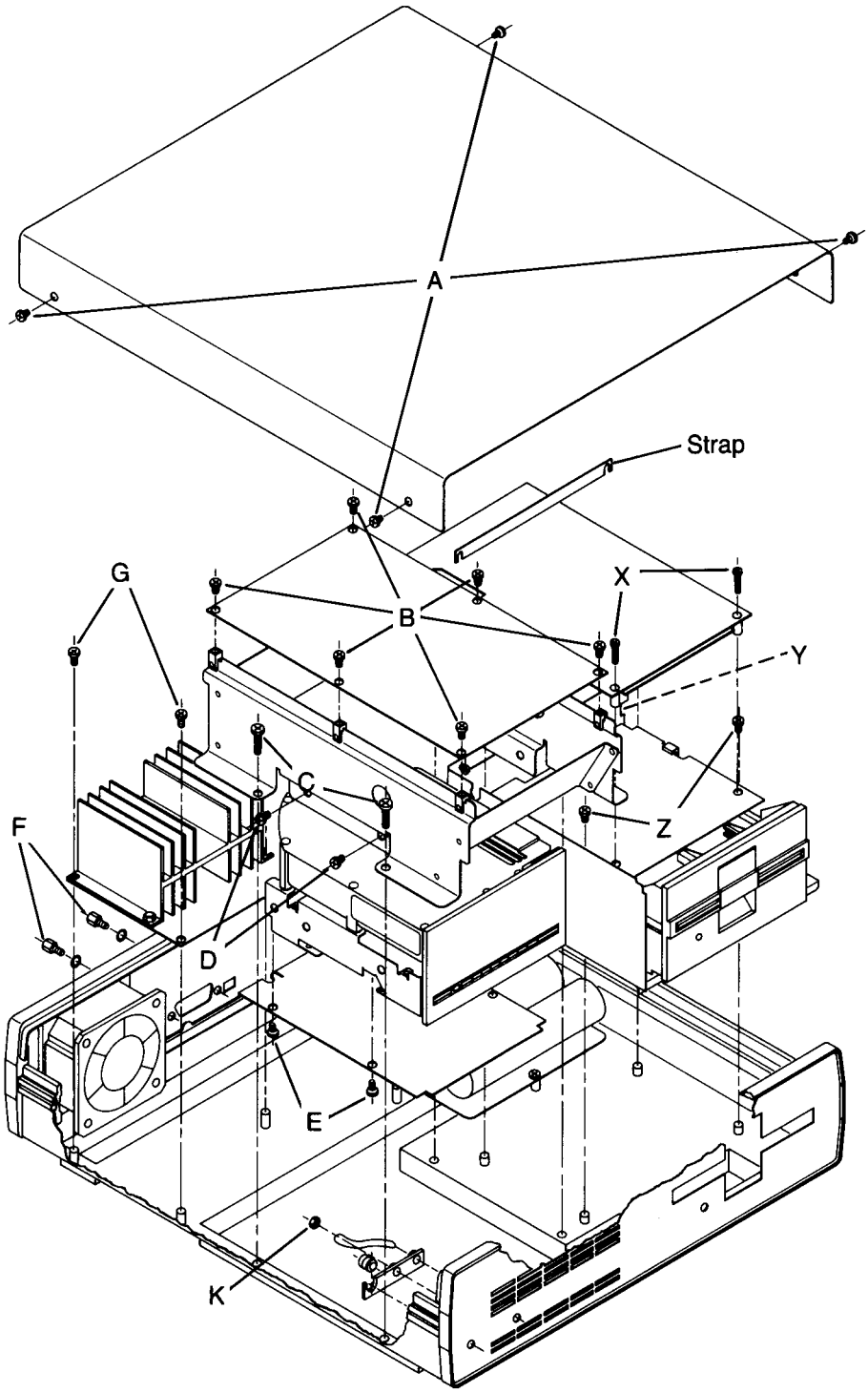

Figure 2-4. 5 1/4-inch Flexible Disc Drive Exploded View

5 1/4 Flexible Disc Drive Disassembly

This section provides information for disassemby and reassembly of the 5 1/4-inch Flexible Disc Drive. An exploded view is also provided with the instructions. Disassembly procedures are given only for the exchange items. Be sure to retain any unmentioned hardware when disassembling the disc drive for reassembly.

To access the internal assemblies, the top cover must first be removed. See the previous section titled "Top Cover Removal" for that information.

CAUTION

CAUTION MUST BE USED WHEN RE-INSTALLING CONNECTORS ON THE POWER SUPPLY PCA. IT IS POSSIBLE TO INSERT THE CONNECTORS IN THE WRONG POSITIONS. REFER TO FIGURE 2-5 FOR THE CORRECT POSITIONS FOR THE CONNECTORS.

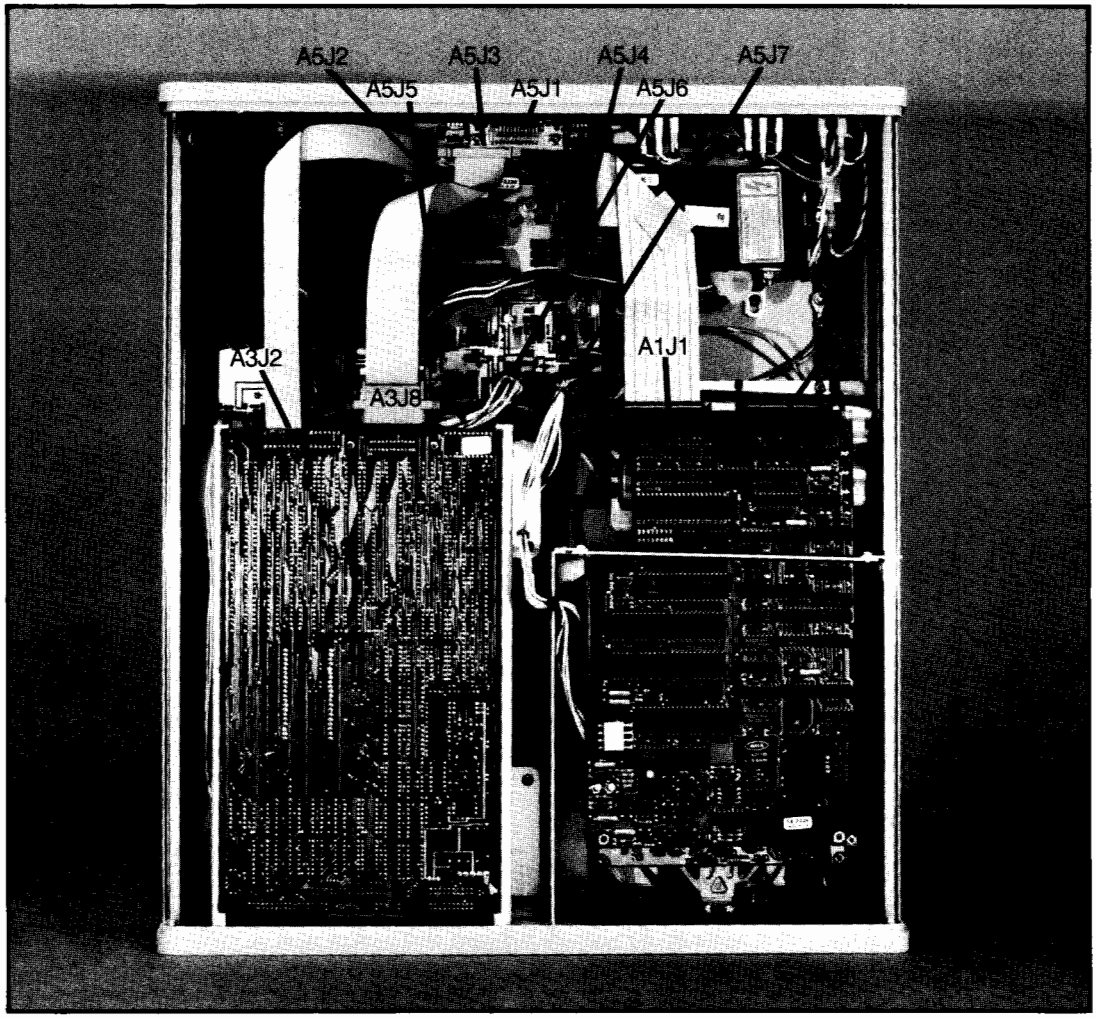

Figure 2-5. Power Supply Connector Locations

Flexible Disc Drive Controller PCA Removal

If you wish to access the drive assembly or the drive electronics PCA, removal of the controller PCA is not required.

Remove the two ribbon cable connectors from the rear of the controller PCA (A1P1 and A1P2) and the power connector (A5P7) from the right side of the power supply PCA. Remove the power connector (A1P7) from the left side of the controller PCA. Next loosen the two screws (Y) and lift off the aluminum strap containing the rubber channel. Remove the two screws (X) and lift the PCA from the top of the drive assembly and place the assembly on a clean, dry surface.

Flexible Disc Drive Assembly Removal

Lift the cable grommet from the slot in the aluminum bracket to the left of the drive. Remove the four screws (Z) and carefully lift the drive and its support bracket partially from the chassis assembly. Remove the power connector (A2P2) and the ribbon cable connector (A2P1) from the rear side of the drive electronics assembly. Four screws hold the drive assembly to the support bracket.

Chapter 3
Replaceable parts

- Introduction
- Replaceable Parts List
- 5 1/4-inch Flexible Disc Parts

Introduction

This chapter contains the replaceable parts list for the Winchester drive, 5 1/4-inch flexible disc drive, power supply, and the case assembly. The parts list for the mechanical assembly is shown in disassembly order with all parts keyed.

Reference designators are used in lieu of item numbers on printed circuit assemblies and the total quantity of each part is shown only once in the TQ column.

The check digit shown in the CD column is required when ordering a part from HP. Please include this number with your order.

The Winchester disc drive, its controller and servo PCAs are "exchange only" assemblies and are not broken down to any lower level.

The various 913X series products are listed with a "Usage Code" assigned to each product. The usage code shows how many, and on what product, the parts are used. The parts which do not have a usage code, are used on all 913X products.

Replaceable Parts List

ITEM NUMBER	REF DES	PART NUMBER	CD	TQ	DESCRIPTION	USAGE CODE
		9133A			Disc Memory Device	A
		9134A			Disc Memory Device	B
		9135A			Disc Memory Device	C
		9133B			Disc Memory Device	D
		9134B			Disc Memory Device	E
1		7101-0672	5	1	Cover, Top	
		Attaching Parts				
		2360-0195	0	4	Screw, # 6 X .312	
		0590-0305	9	1	Nut, Hex, 6X32	
		**********				
2	W3	09135-61602	2	1	Cable, Power, Winchester	
3	W4	09135-61603	3	1	Cable, Winchester Controller	
4	W5	09135-61604	4	1	Cable, Winchester Data	
5	W6	09135-61605	5	1	Cable, Winchester HP-IB	
6	W7	09135-61606	6	1	Cable, Winchester Select Code	
7	A3	09135-69515	2	1	Controller PCA, Winchester	
	A3	09135-69501		1	Controller PCA, Winchester	
	A3	09133-69514		1	Controller PCA, Winchester	
		Attaching Parts				
		0515-0066	1	6	Screw, Mach, M5.0X.8	
		**********				
8	A4	09135-69600	5	1	Drive, Winchester A,B,C	
8	A4	09133-69100		1	Drive, Winchester A,B,C	
8	A4	09133-69102		1	Drive, Winchester D,E	
		Attaching Parts				
		2360-0113	2	4	Screw, Locking, # 6X.375	
		**********				
		1535-4225		1	Sensor, Index	
		1535-4226		1	Brake Assembly	
		1535-4227		1	Spring, Ground	
9	A4	09135-69502	9	1	Drive Elect PCA, Winchester 5-Mbyte Dual Platter – used with the 09135-69600 Drive	
	A4	09133-69102		1	Drive Elect PCA, Winchester 10-Mbyte Dual Platter – used with the 09133-69101 Drive	
	A4	09133-69100		1	Drive Elect PCA, Winchester 5-Mbyte Single Platter – used with 09133-69103 Drive	
		Attaching Parts				
		3030-0918	7	6	Screw, Button Head	
		**********				

ITEM NUMBER	REF DES	PART NUMBER	CD	TQ	DESCRIPTION	USAGE CODE
10		1600-1259	8	1	Module Bracket	
		Attaching Parts				
		2360-0113	2	4	Screw, Locking, # 6X.375	
		**********				
11	A5	09135-69510	5	1	Power Supply Electronics PCA	
		Attaching Parts				
		2360-0123	4	5	Screw, 6-32X.625	
		**********				
12		1600-1253	2	1	Plate, Capacitor	
		Attaching Parts				
		2360-0123	4	3	Screw, 6-32X.625	
		**********				
13	C18	0180-3211	3	1	C-F, 24000 uF, 28 VDC	
14	C19	0180-3211	3	1	C-F, 24000 uF, 28 VDC	
15	CR14	1906-0043	4	1	Diode Bridge	
		Attaching Parts				
		2360-0205	3	1	Screw, Mach, 6-32X.75	
		3050-0228	4	1	Washer, Flat	
		**********				
16	T1	9100-4246	7	1	Transformer, Power	
		Attaching Parts				
		2360-0113	2	1	Screw, Locking, # 6X.375	
		**********				
17	S1	3101-0402	5	1	Switch, AC Line	
18	S2	3101-2360	8	1	Switch, Slide	
19	S3	3101-2360	8	1	Switch, Slide	
		Attaching Parts				
		2260-0009	3	4	Nut, Hex, 4-40	
		**********				
20	M1	3160-0399	9	1	Fan, Tubeaxial	
		Attaching Parts				
		0590-0305	9	2	Nut, Hex	
		**********				

ITEM NUMBER	REF DES	PART NUMBER	CD	TQ	DESCRIPTION	USAGE CODE
21	F1	2110-0083	6	1	Fuse, 2.5A, 250V, Normal Blow	
		OR				
		2110-0043	8	1	Fuse, 1.5A, 250V, Normal Blow	
22		2110-0565	9	1	Cap, Fuse	
23	XF1	2110-0610	5	1	Fuseholder	
24	FL1	9135-0136	9	1	Filter, Line	
		Attaching Parts				
		2260-0009	3	2	Nut, Hex, 4-40	
		**********				
25		0403-0106		4	Feet, Case	
26		7101-0674	7	1	Plate, Base	
		Attaching Parts				
		2360-0195	0	4	Screw, # 6 X .312	
		**********				
27		4040-2084	4	1	Light Pipe	
28		4040-2085	5	1	Bracket, Light Pipe	
		Attaching Parts				
		0590-0305	9	1	Nut, Hex, 6-32	
		**********				
29	CR2	09130-61604	9	1	Diode, LED Assy, Power	
30		7101-0671	4	1	Panel, Front, HP 9134A	C
		OR				
		7101-0670	3	1	Panel, Front, HP 9135A	B
		OR				
		09133-04401		1	Panel, Front, HP 9133A	A
		OR				
		01934-04404		1	Panel, Front, HP 9134B	D
		OR				
		09133-04403		1	Panel, Front, HP 9133B	E
		Attaching Parts				
		0590-0305	9	6	Nut, Hex, 6-32	
		**********				
31		7101-0673	6	1	Panel, Rear	
		Attaching Parts				
		0590-0305	9	6	Nut, Hex, 6-32	
		**********				
32		82901-20014	7	2	Bezel, Front/Rear	

ITEM NUMBER	REF DES	PART NUMBER	CD	TQ	DESCRIPTION	USAGE CODE
		Attaching Parts				
		2510-0667	0	8	Screw, Mach, 8-32X.375	
		**********				
33		7101-0667	8	2	Siderails	

5 1/4-inch Flexible Disc Parts

Replaceable Parts List

ITEM NUMBER	REF DES	PART NUMBER	CD	TQ	DESCRIPTION DESCRIPTION
1	W1	09135-61600	0	1	Cable, Flexible Disc Controller
2	W2	09135-61601	1	1	Cable, Power, Flexible Disc
3		1600-0951	5	1	Bracket, Clamp
		Attaching Parts			
		2200-0521	8	2	Screw, Mach
		**********			
4	A1	82901-69002	4	1	Controller PCA, Flexible Disc
		OR			
4		82901-69503	0	1	Controller PCA, Flexible Disc
		Attaching Parts			
		2200-0119	0	2	Screw, Mach, 4-40X1.0
		**********			
5	A2	09130-69600	1	1	Drive, Flexible Disc
		Attaching Parts			
		2360-0113	2	4	Screw, Locking, # 6X.25
		**********			
6	A2A1	09130-66501	5	1	Drive Elect PCA, Flexible Disc
		Attaching Parts			
		2200-0521	8	2	Screw, Mach, 4-40X.25
		**********			
7		1600-1252	1	1	Sub-panel, Flexible Disc Drive
		Attaching Parts			
		2360-0113	2	4	Screw, Locking, # 6X.25

Chapter 4
Schematic Diagrams

- **Introduction**

Introduction

This chapter provides the schematic diagram for the power supply including the primary power wiring. Two power supplies are shown here; the 09135-69500, and the 09135-69510.

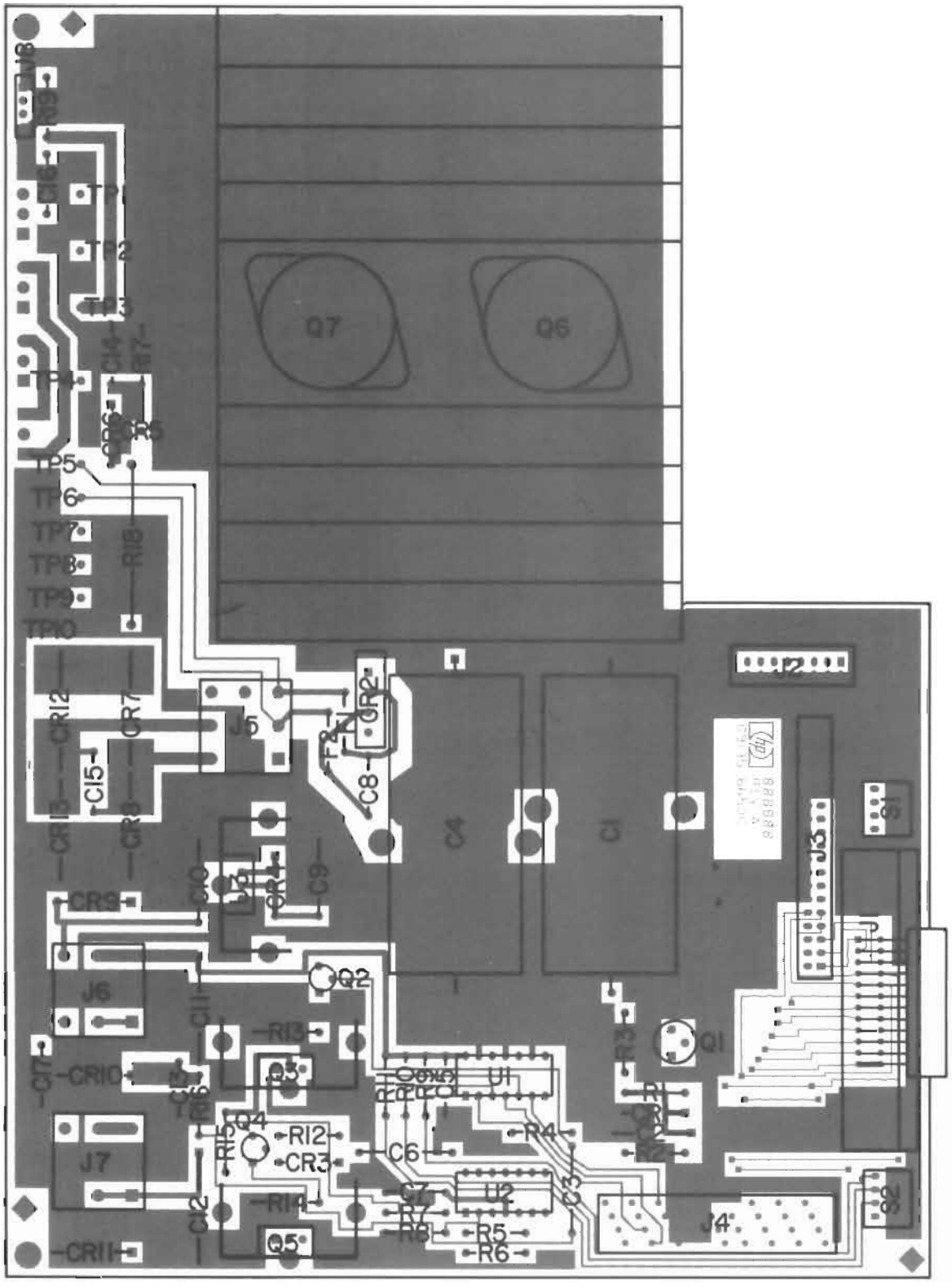

Figure 4-1. Component Locator 09135-69500

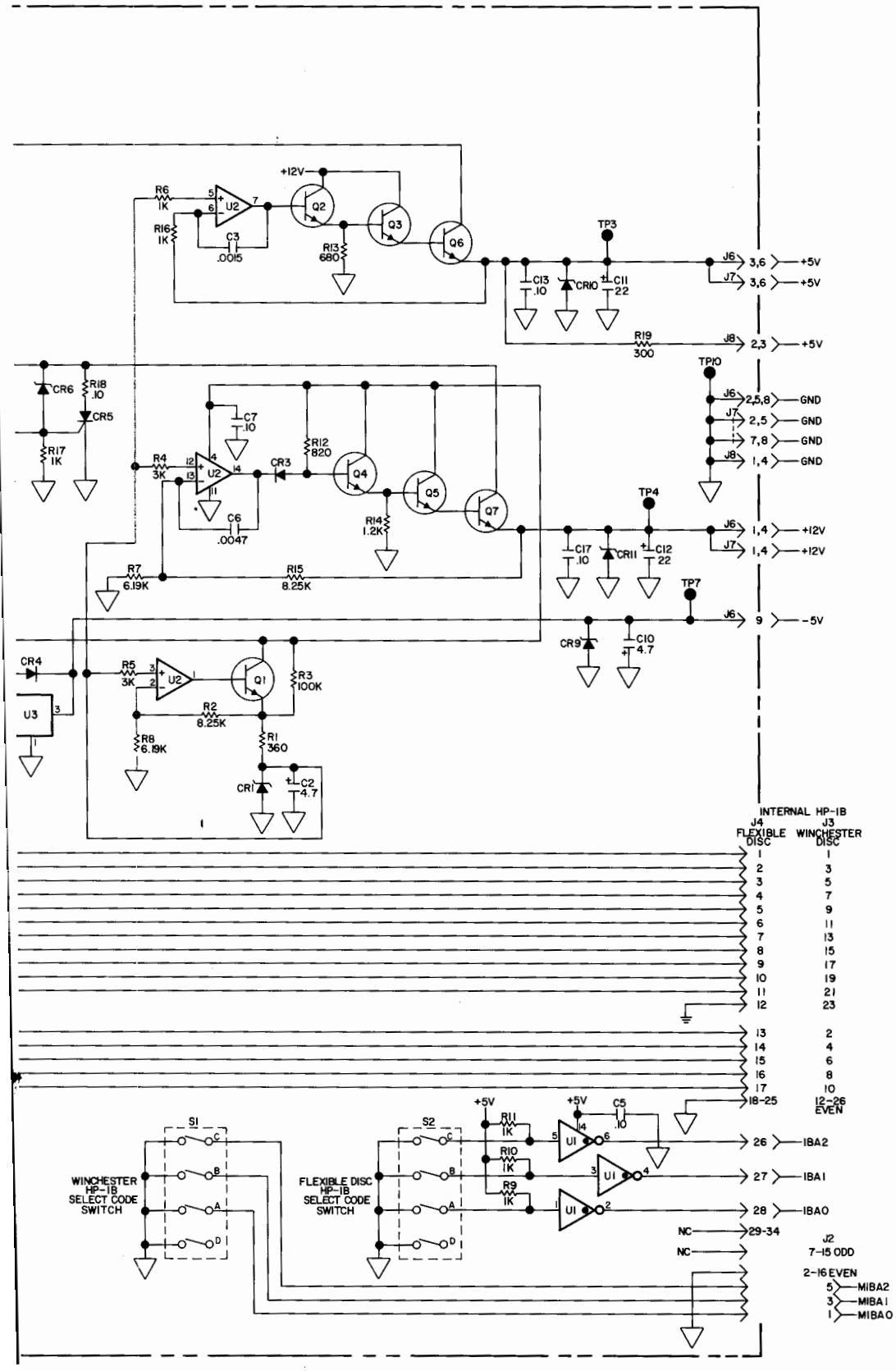

Figure 4-2. Power Supply Schematic 09135-69500

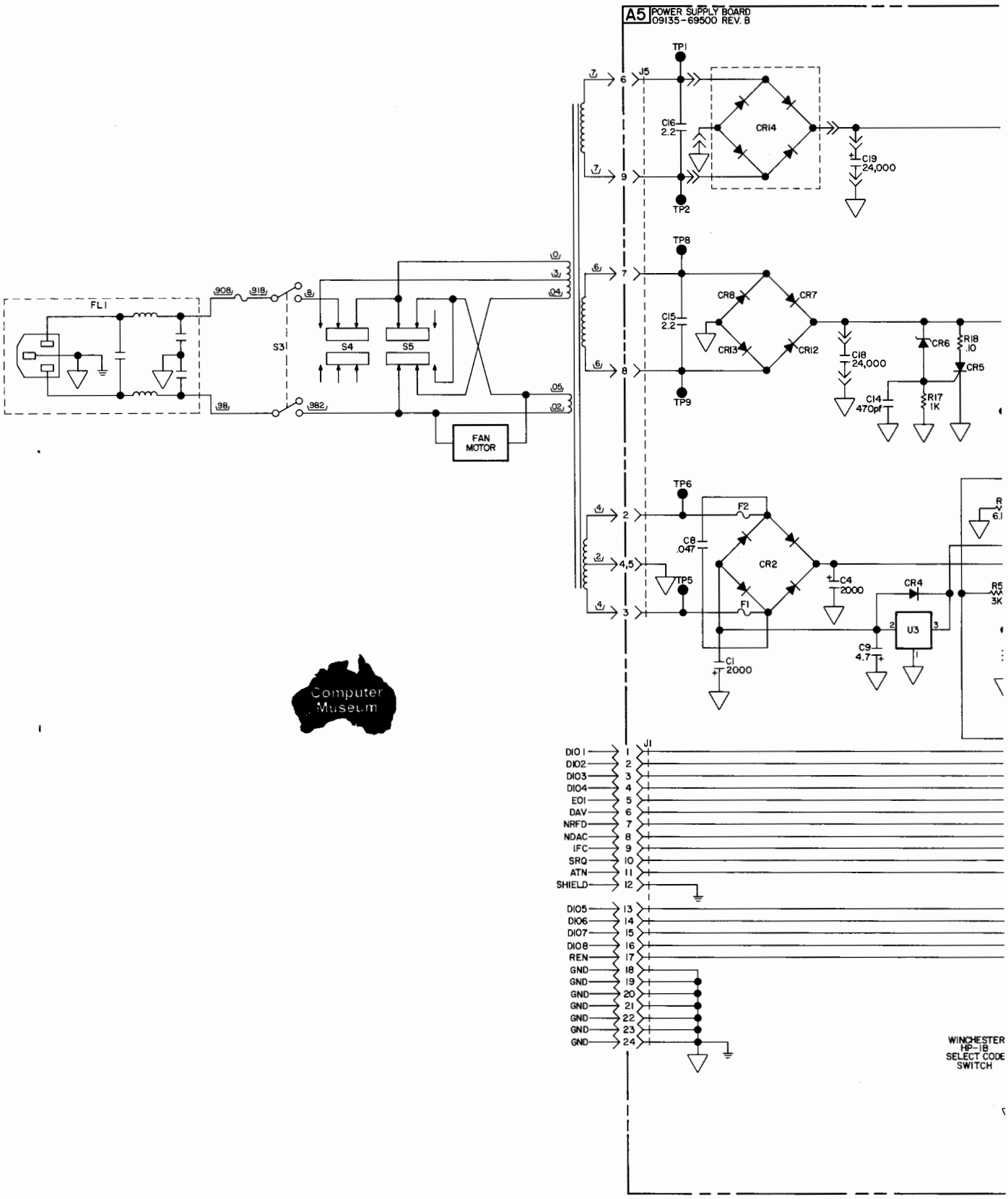

Computer Museum

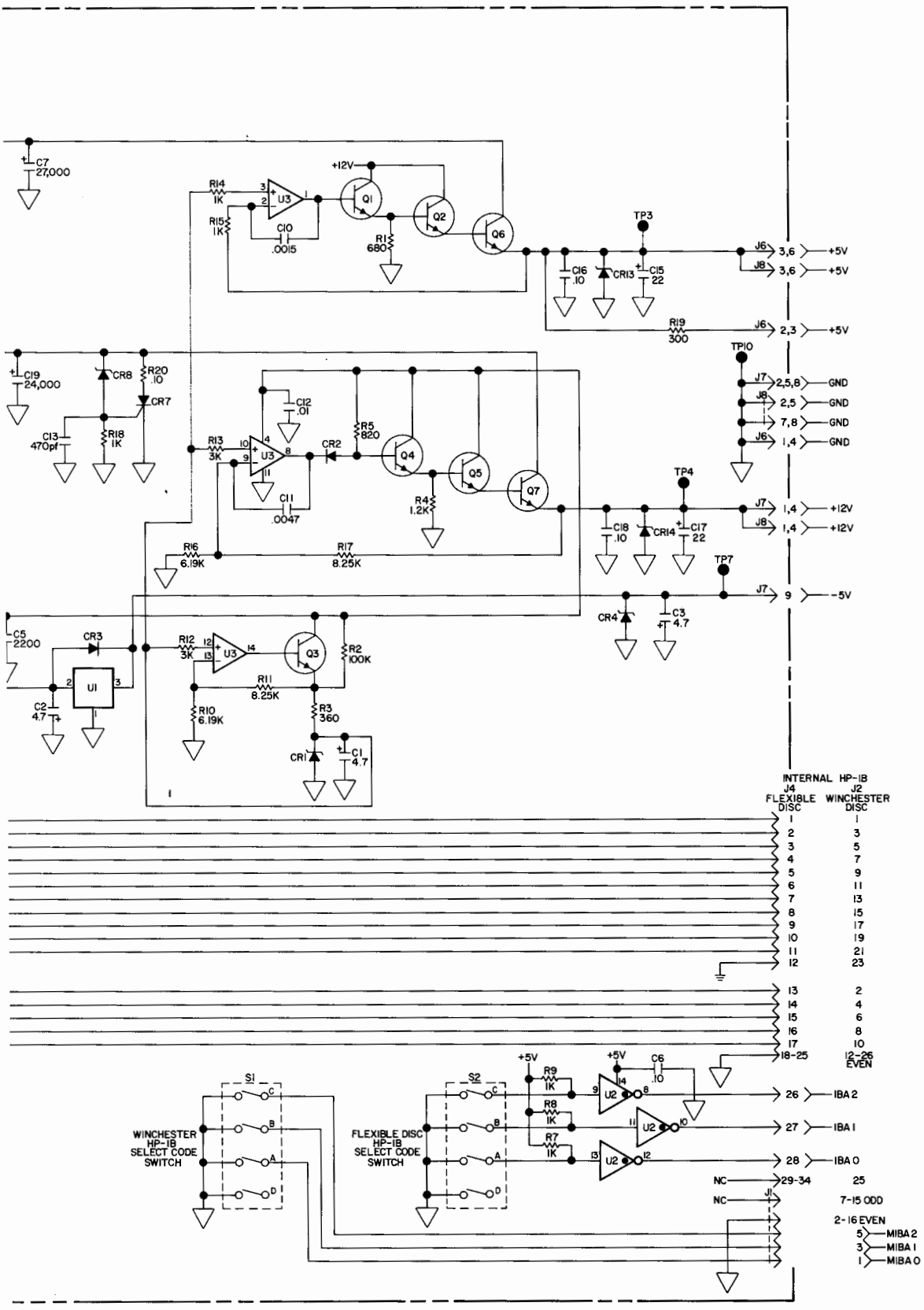

Figure 4-4. Power Supply Schematic 09135-69510

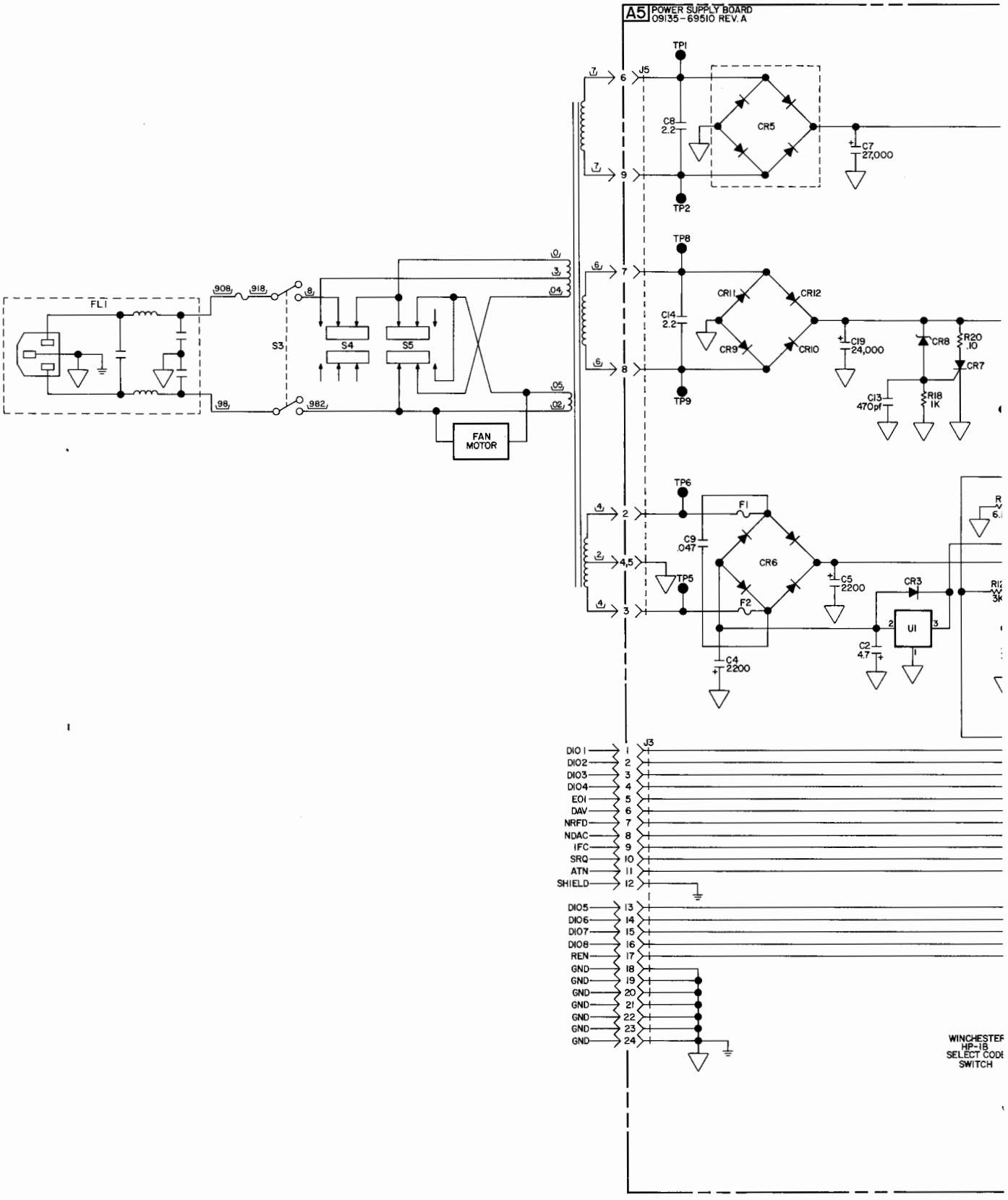
A5 POWER SUPPLY BOARD
09135-69510 REV. A
TP1
TP2
TP8
TP9
TP6
TP5
J5
J3
C8
2.2
CR5
C7
27,000
C14
2.2
CR11
CR12
CR9
CR10
C19
24,000
CR8
R20
.10
CR7
C13
470pf
R18
1K
C9
.047
F1
F2
CR6
C5
2200
CR3
U1
C2
4.7
C4
2200
FL1
S3
S4
S5
FAN
MOTOR
DIO1
DIO2
DIO3
DIO4
EOI
DAV
NRFD
NDAC
IFC
SRQ
ATN
SHIELD
DIO5
DIO6
DIO7
DIO8
REN
GND
WINCHESTER
HP-IB
SELECT CODE
SWITCH

Chapter 5
Product Operation and Specifications

- HP 9133A/B Disc Memory
- HP 9134A/B Disc Memory
- HP 9135A Disc Memory

HP 9133A/B Disc Memory

The HP 9133A/B disc memory (Figure 5-1) is a random access data storage device which contains a 5-Mbyte 5 1/4-inch Winchester disc drive and a 3 1/2-inch flexible disc drive.

The 3 1/2-inch flexible disc emulates the HP 82902M 5 1/4-inch flexible disc drive with 286 Kbytes of data storage capacity. The Winchester drive within the 9133A has been designed to emulate an HP 9895A 8-inch flexible disc drive master with three slave drives (1.15 Mbytes per drive). Thus, HP computers that support the 9895A and 82902M flexible disc drives can operate the 9133A.

The HP 9133A Option 010 consists of a modification to the Winchester controller printed circuit assembly which causes the Winchester drive to appear as one large 4.82-Mbyte volume. The Winchester with option 010 responds to most of the commands used on the 9895A flexible disc drive.

The Winchester drive found in the 9133B provides 10 Mbytes of storage capacity in a single volume.

Refer to your computer's Mass Storage Manual for programming information for the HP 82902M and 9895A flexible disc drives.

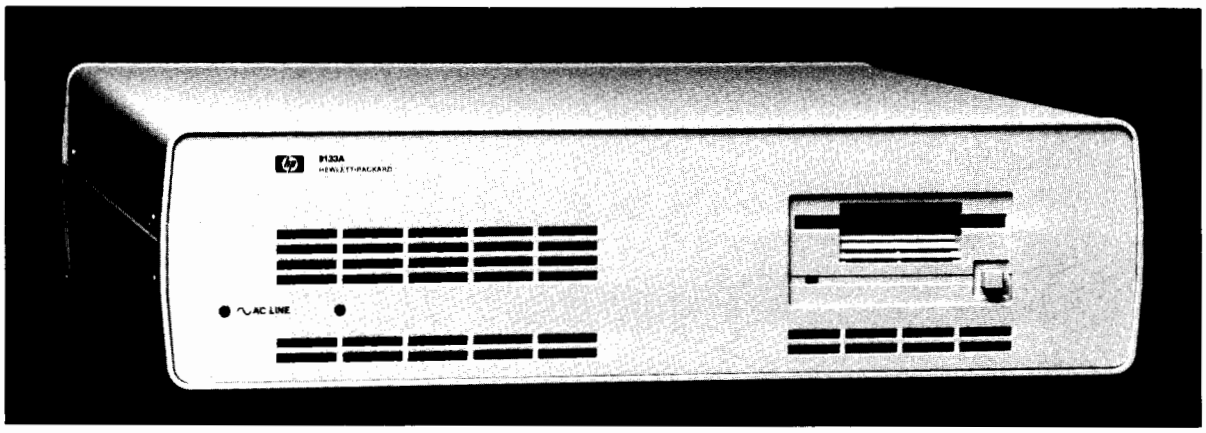

Figure 5-1. HP 9133A/B Disc Memory

Technical Specifications

Listed below are the physical, electrical, and environmental specifications for the HP 9133A/B disc memory.

Physical	
Number of Drives:	1 - Winchester 1 - 3 1/2-inch flexible disc
Net Weight:	15.5 kg (34.7 lbs)
Height:	130 mm (5.125 in.)
Depth:	476 mm (18.7 in.)
Width:	425 mm (17 in.)
Formatted Storage Capacities:	4.6 Mbytes (9133A) 4.8 Mbytes (9133A) 9.68 Mbytes (9133B)
Electrical	
Power Source Requirements:	140 Watts
Line Frequency:	48 Hz to 66 Hz
Environmental	
Operating Temperature:	10 to 40°C (50 to 104°F)
Operating Humidity:	20 to 80 %
Max. Wet Bulb Temperature:	25.5°C
Storage Humidity:	5 to 95 % (non-condensing)
Operating Altitude:	0 to 4600 m (0 to 15,000 ft)
Storage Temperature:	-40° to 70°C (-40° to 158°F)
Storage Altitude:	-300 to 15,200 m (-1000 to 50,000ft)
3 1/2-inch Flexible Disc Drive	
HP Double Density Format	
Encoding:	MFM
Rotational Speed:	600 RPM
Bit Density @ 600 RPM:	Track 69 (Inside track) 7610 BPI
Track Density:	135 tracks per inch
Tracks per Surface:	70
Surfaces used per disc:	1
Capacity	
Bytes/Sector:	256
Sectors/Track:	16
Tracks:	70
Bytes/Drive (Formatted):	286 Kbytes
Access Time	
Track-to-Track Seek:	15 ms/track, plus 15 ms settling

Maximum Track-to-Track Seek (70 tracks):	1065 ms
Average Track-to-Track:	365 ms
Maximum Rotational Latency:	100 ms
Average Rotational Latency:	50 ms
Spindle Motor on time:	1 second
Maximum Data Access Time (Seek plus Latency plus Motor on time):	2.165 second
Average Data Access Time:	415 ms

Data Transfer Rates: (3 1/2-inch flexible disc only)

Interleave	Average Transfer Rate (Kbytes/second)
1	2.6
2	17.1
3	12.1
4	9.3
5	7.6
6	6.4
7	5.5
8	4.8
9	4.3
10	3.9
11	3.5
12	3.2
13	3.0
14	2.8
15	2.6

Maximum burst transfer rate for the 3 1/2-inch drive is 64.5 Kbytes/s writing and 67 Kbytes/s for reading. This is the capability of the 3 1/2-inch drive; your system transfer may vary due to your controller.

Interleave for the Winchester is preset at the factory and cannot be changed.

Refer to the beginning of this manual (Section I Chapter 1) for specifications on the Winchester drive.

System Operation

Refer to the 9121D/S Service Manual P/N 09121-90030 for operation of the 3 1/2-inch flexible disc.

Write Protection

There is no write protect capability on the Winchester drive. Caution must be used to avoid erasing or initializing over data you want to keep.

Controls and Indicators

The indicators are located on the front panel. The indicators, as shown in Figure 5-2, are the disc access light for the Winchester drive and the head load indicator for the 3 1/2-inch flexible disc drive. The Winchester drive light is illuminated whenever the disc is accessed for data storage or retrieval and momentarily when the drive is powered-up. The flexible disc drive light lights up whenever the unit is powered-up, the head is loaded or when the drive is selected.

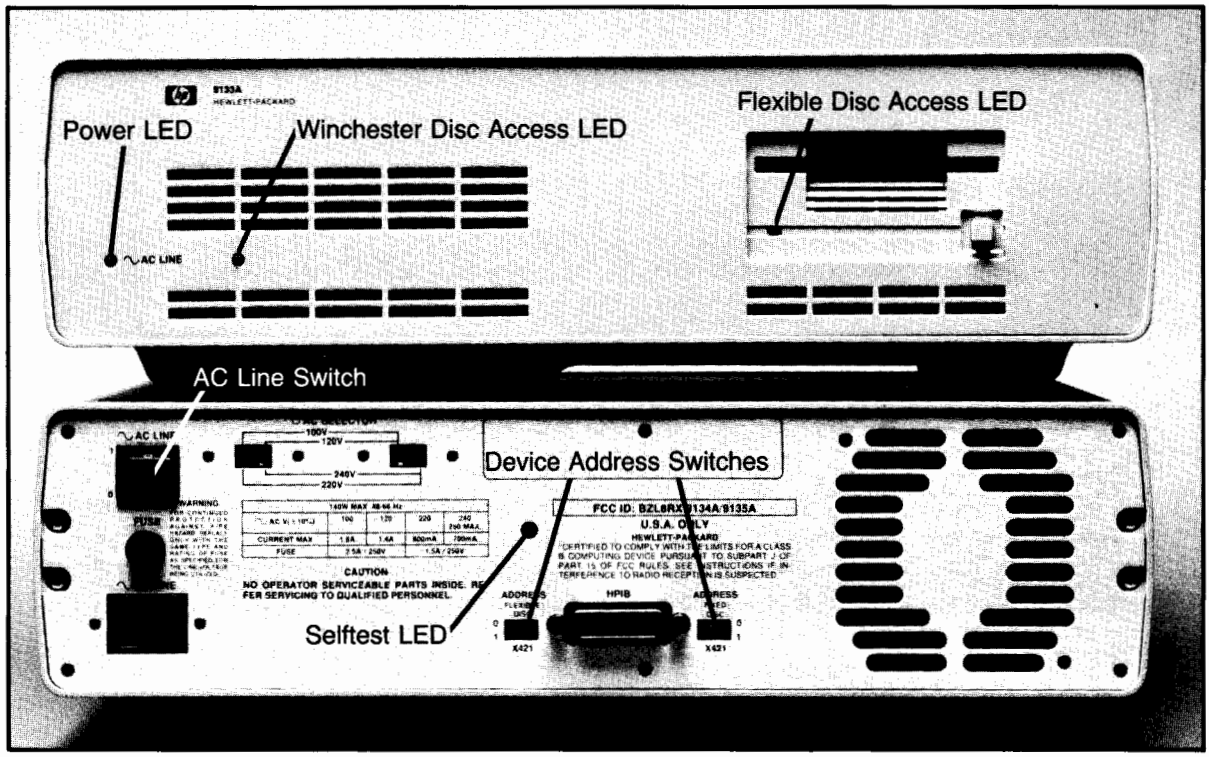

Figure 5-2. Controls and Indicators

CAUTION

THE ACTIVITY LIGHT ON THE FRONT OF THE DRIVE INDICATES USAGE OF THAT DRIVE. DO NOT DEPRESS THE DISC EJECT BUTTON WHEN THE ACTIVITY LIGHT IS ON.

Applying Power

Locate the AC line switch on the rear panel and set it to the "ON" or "1" position. The disc drive requires about 30 seconds after the application of power before it is ready for operation or before you insert your disc. See the section titled "Selftest" for the power-on selftest indication.

HP 9134A/B Disc Memory

The HP 9134A/B Disc Memory (Figure 5-3) is a random access data storage device. The disc memory contains a 5 1/4-inch Winchester disc drive. The drive in the 9134A provides either 4.6 Mbytes or 4.8 Mbytes of data storage (option 010). The 9134B provides 10 Mbytes of data storage.

The Winchester drive in the 9134A has been designed to emulate an HP 9895A 8-inch flexible disc drive master with three slaves. Thus, most HP computers that support the 9895A flexible disc drive can operate the HP 9134A Winchester drive.

Refer to the Mass Storage Manual for your computer for programming information for the HP 9895A.

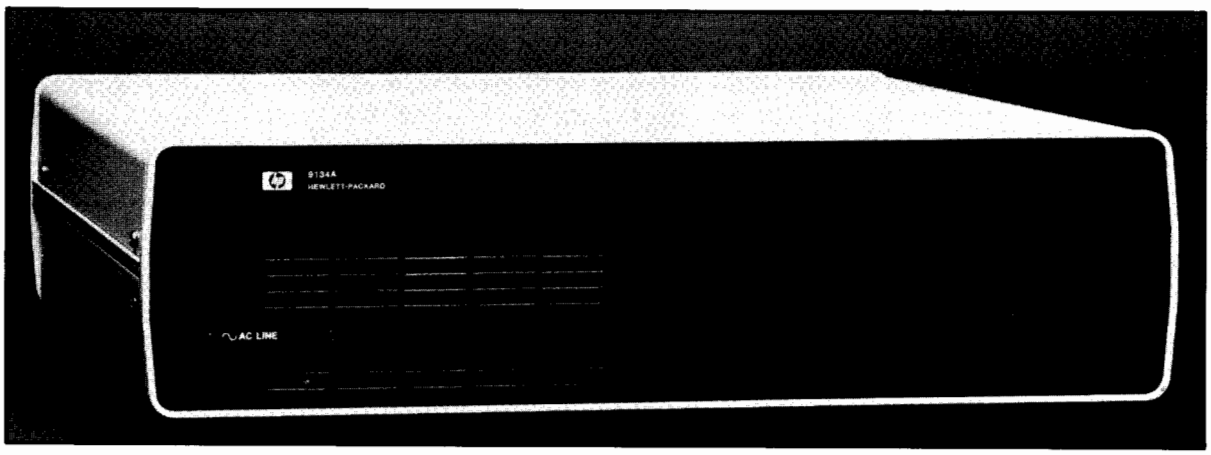

Figure 5-3. HP 9134A/B Disc Memory

Technical Specifications

Listed below are the electrical and physical specifications for the HP 9134A/B disc memory.

Number of drives:	1 Winchester
Net Weight:	13.4 kg (31.5 lbs)
Height:	130 mm (5.125 in)
Depth:	476 mm (18.7 in)
Width:	425 mm (17 in)
Formatted Storage Capacities:	4.6 Mbytes (9134A)
	4.8 Mbytes (9134A option 010)
	9.68 Mbytes (9134B)

Interface:	HP-IB
System:	System Dependent
Electrical	
Power Source Requirements:	140 Watts
Line Frequency:	48Hz to 66Hz
Environmental Specs:	
Operating Temperature:	10 to 40°C (50 to 104°F)
Operating Humidity:	20 % to 80 %
Max. Wet Bulb Temperature:	25.5°C non-condensing
Operating Altitude:	0 to 4600 m (0 to 15,000 ft)
Storage Humidity:	5 to 95 % non-condensing
Storage Temperature:	-40 to 60°C (-40 to 140°F)
Storage Altitude:	-300 to 15,200m (-1000 to 50000 ft)

Write Protection

There is no write protect capability on the Winchester drive. Caution must be used to avoid erasing or initializing over data you want to keep.

Controls and Indicators

The indicators are located on the front panel. The indicators, as shown in Figure 5-4, are the power-on light, and the Winchester disc drive access light. The disc access light is illuminated whenever the disc is accessed for data storage or retrieval.

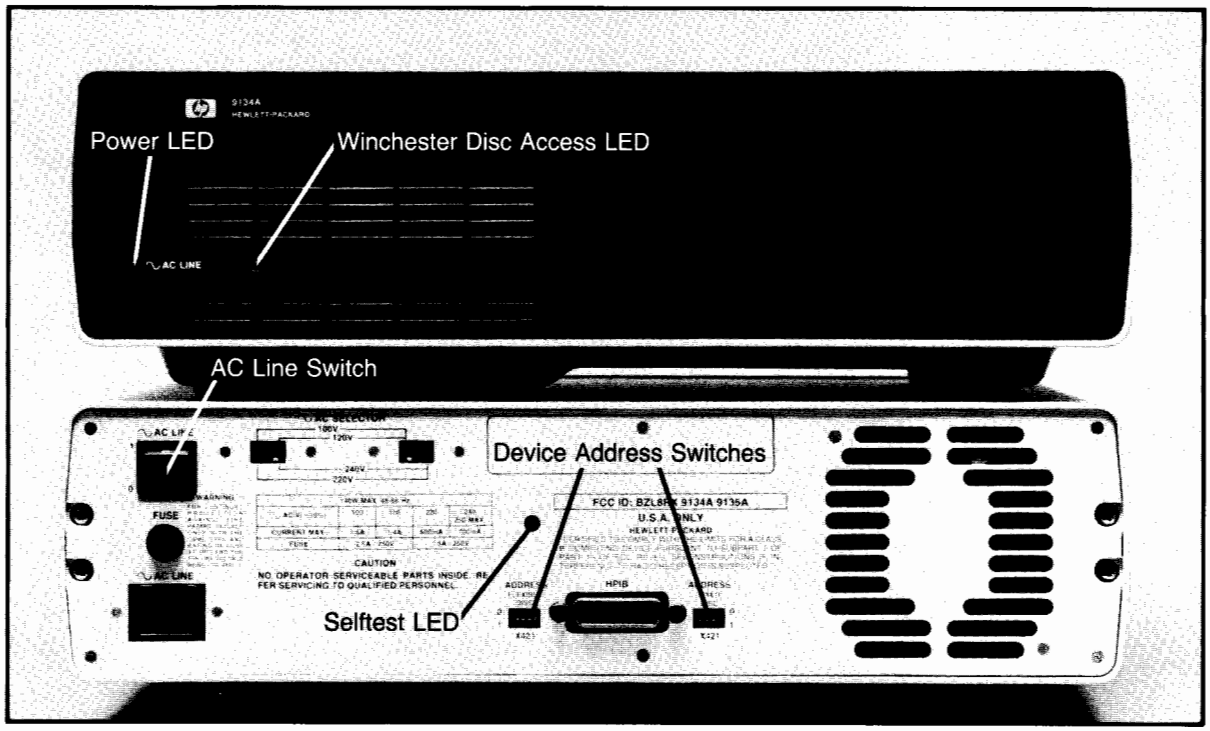

Figure 5-4. Controls and Indicators

Applying Power

Before turning the disc memory on, be sure to perform all the procedures in the installation section. Locate the AC line switch on the rear panel and set it to the "ON" or "1" position. The Winchester disc drive requires about 30 seconds after the application of power before it is ready for operation.

HP 9135A Disc Memory

The HP 9135A Disc Memory (Figure 5-5) is a random access data storage device. The disc memory contains both a 5 1/4-inch Winchester disc drive and a 5 1/4-inch flexible disc drive.

The Winchester drive has been designed to emulate an HP 9895A 8-inch flexible disc drive master with three slaves. Thus, most HP computers that support the 9895A flexible disc drive can operate the Winchester drive in the HP 9135A. Only computers that support the HP 9895A and HP 8290X disc drives can fully operate both disc drives in the HP 9135A.

Refer to the Mass Storage Manual for your computer for programming information for either the HP 9895A (used for the Winchester drive), or HP 8290X 5 1/4-inch flexible disc drive (used for the flexible disc drive in the HP 9135A).

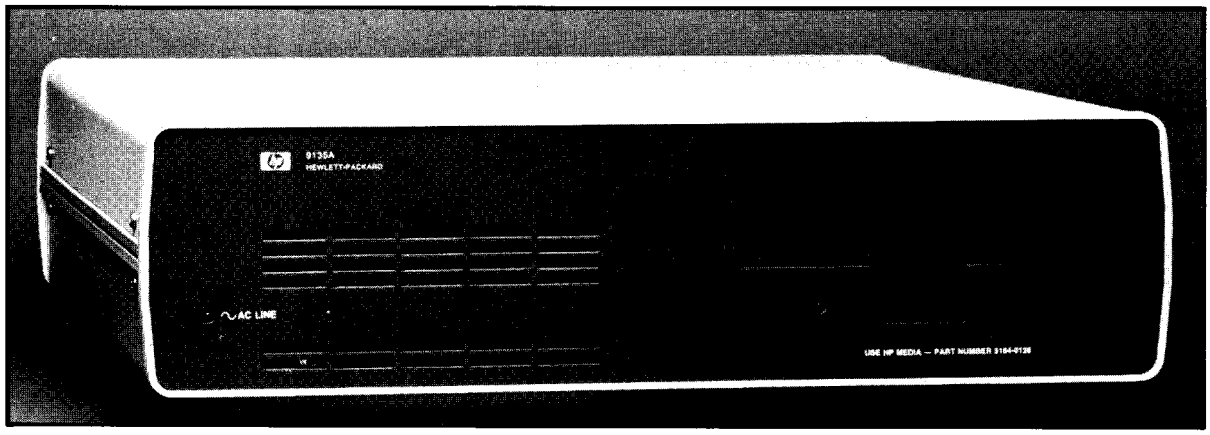

Figure 5-5. HP 9135A Disc Memory

Technical Specifications

Listed below are the electrical and physical specifications for the HP 9135A disc memory.

Number of drives	1 5 1/4-inch Winchester 1 5 1/4-inch flexible disc
Net Weight	18.1 kg (40 lbs)
Height	130 mm (5.125 in)
Depth	476 mm (18.7 in)
Width	425 mm (17 in)
Formatted Storage Capacities:	4.6 Mbytes Winchester or

	4.8 Mbyte Winchester 270 Kbytes flexible disc
Interface:	HP-IB
System:	System Dependent
Rotational Speed:	3600 RPM ± 1 % Winchester 300 RPM ± 1.5 % flexible disc
Electrical Power Source Requirements	140 Watts
Line Frequency	48Hz to 66Hz
Environmental Specs:	
Operating Temperature	10 to 40°C (50 to 104°F)
Operating Humidity	20 % to 80 %
Max. Wet Bulb Temperature	25.5°C non-condensing
Storage Humidity	5 to 95 % (non-condensing)
Operating Altitude	0 to 4600m (0 ft to 15,000 ft)
Storage Temperature	-40 to 60°C (-40 to 140°F)
Storage Altitude	-300 to 15,200m (-1000 to 50,000ft)

NOTE

The flexible disc in the HP 9135A disc memory is designed for operation in a typical office environment. use of the equipment in an environment containing corrosive substances will cause the flexible disc drive and media life to be drastically reduced.

Write Protection

There is no write protect capability on the Winchester drive. Caution must be used to avoid erasing or initializing over data you want to keep.

Controls and Indicators

The indicators are located on the front panel. The indicators, as shown in Figure 5-6, are the disc access light for the Winchester drive and the head load indicator for the 5 1/2-inch flexible disc drive. The Winchester drive light is illuminated whenever the disc is accessed for data storage or retrieval and momentarily when the drive is powered-up. The flexible disc drive light lights up whenever the unit is powered-up, the head is loaded or when the drive is selected by your host controller.

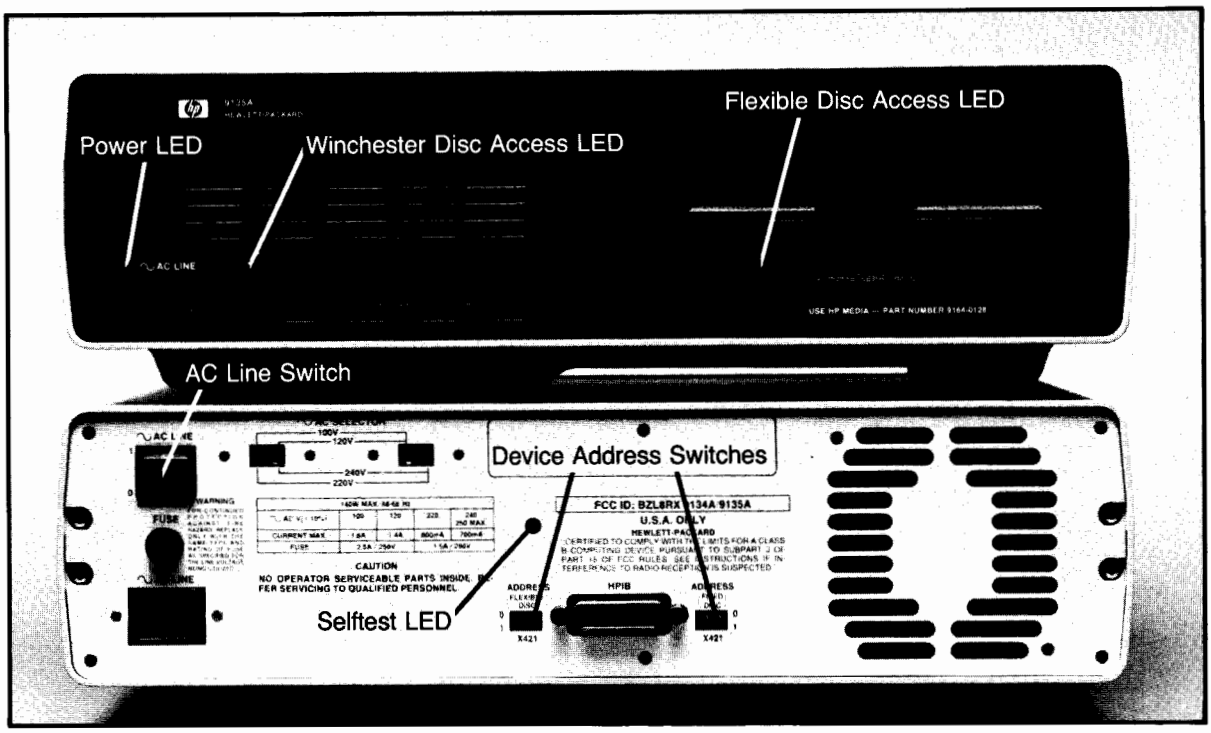

Figure 5-6. Controls and Indicators

CAUTION

THE ACTIVLITY LIGHT ON THE FRONT OF THE DRIVE INDICATES USAGE OF THAT DRIVE. DO NOT DEPRESS THE DISC EJECT DUTTON WHEN THE ACTIVITY LIGHT IS ON.

Applying Power

Locate the AC line switch on the rear panel and set it to the "ON" or "1" position. The disc drive requires about 30 seconds after the application of power before it is ready for operation or before you insert the flexible disc.

Chapter 6
Product Installation

- Equipment Supplied
- Unpacking Your Disc Memory
- Configuring Power
- Interfacing the Disc Memories to Your System
- Cleaning The Case

Equipment Supplied

Please check to insure that your customer has received all of the standard equipment. If any items are incorrect or missing, please contact the order processing department at the factory.

Table 6-1 Equipment Supplied

Description	Quantity		HP Part Number
Power Cable	1		Dependent on location (Refer to Power Cord Section)
User's Manual	1		09134-90000
Fuse	1	100 to 120 VAC 2.5 Amp Or 220 to 240 VAC 1.5 Amp Dependent on Power Cord	2110-0083 2110-0043

A package of ten 3 1/2-inch flexible discs can be ordered using the 92191A product number.

A package of ten 5 1/4-inch flexible discs can be ordered using the 92190A product number.

Unpacking Your Disc Memory

Your disc memory was carefully inspected before shipment. Remove the unit from the shipping carton and carefully inspect the unit for any physical damage that may have occurred during shipment. If you find any damage, you should immediately notify your dealer and file a claim with any carriers involved.

If the disc memory is moved, be careful when picking it up and setting it down.

CAREFULLY REPACK THE DISC MEMORY IN THE ORIGINAL SHIPPING CARTON BEFORE TRANSPORTING IT TO ANOTHER SITE.

CAUTION

THE DISC MEMORY IS A PRECISION INSTRUMENT. MECHANICAL SHOCK CAN MISALIGN THE READ/WRITE HEADS, RESULTING IN READ ERRORS AND/OR DAMAGED DISCS WHETHER THE DISC IS OPERATING OR NOT.

CAUTION

EVIDENCE OF EXCESSIVE SHOCK WILL VOID THE WARRANTY.

Configuring Power

The following information should be used to configure your disc memory device power for proper operation in your area.

Setting the Line Voltage Select Switches

The voltage select switches on the rear panel must be set to the nominal line voltage for the area in which it is operating. Figure 6-1 shows the setting of the voltage select switches for the various line voltages.

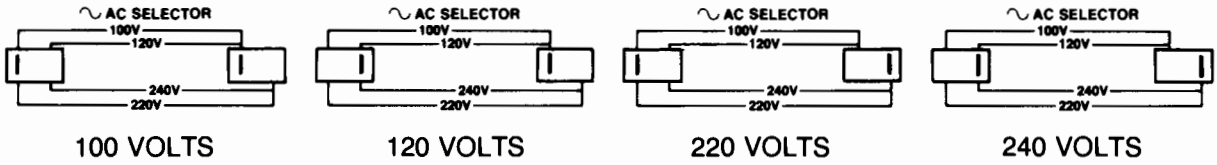

Figure 6-1. Line Voltage Select Switches

Fuses

A different fuse is required for each of the two voltage ranges of 110-120 and 220-240 VAC. Table 6-2 gives the correct fuse ratings and fuse part numbers.

Table 6-2. Fuses

Voltage Range	Fuse Rating	HP Part Number
100 & 120 VAC	2.A 250 VAC Normal Blow	2110-0083
220 & 240 VAC	1.A 250 VAC Normal Blow	2110-0043

WARNING

ALWAYS DISCONNECT THE DISC MEMORY FROM THE AC SOURCE BEFORE CHANGING FUSES.

Power Cords

Power cords supplied by HP have polarities matched to the power-input socket on the equipment (Figure 6-2).

* L = Line or active conductor (also called "live" or "hot")
* N = Neutral or identified conductor
* E = Earth or safety ground

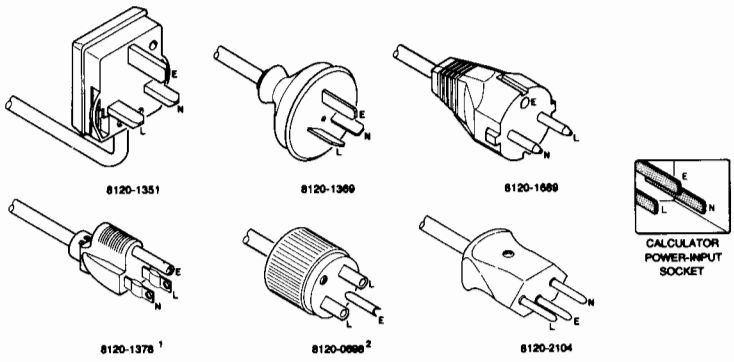

[1]UL and CSA approved for use in the United States of America and Canada with equipment set for either 100 or 120 Vac operation.

[2]UL and CSA approved for use in the United States of America and Canada with equipment set for either 200 or 240 Vac operation.

Figure 6-2. Available Power Cords

WARNING

IF IT IS NECESSARY TO REPLACE THE POWER CORD, THE REPLACEMENT CORD MUST HAVE THE SAME POLARITY AS THE ORIGINAL. OTHERWISE, A SAFETY HAZARD MIGHT EXIST IF AN INTERNAL FAILURE OCCURS.

Power cords with different plugs are available for equipment; the part number of each cord is shown in Figure 6-2. Each plug has a ground connector. The cord packaged with the equipment depends upon where the equipment is to be delivered.

Interfacing the Disc Memories to Your System

The Disc Memories is connected to the computer via the Hewlett-Packard Interface Bus (HP-IB). The device address switches are set prior to connecting the interface cable.

Selecting the Device Address

Each device in an HP-IB system must be set to a unique device address. The HP 9133A/B or HP 9135A each contain two separate devices in the same the package. A device address switch is provided for each device. See Figure 6-3 for switch locations.

Prior to setting the device address switches, turn the disc memory AC line switches OFF.

The switches can be set to any one of eight device addresses, ranging from decimal 0 through 7. Refer to Figure 6-3 to set these switches to the desired device address.

Address	Switch Segments X	4	2	1	
0	***	UP	UP	UP	(Factory setting for Winchester)
1	***	UP	UP	DOWN	
2	***	UP	DOWN	UP	(Factory setting for flexible disc)
3	***	UP	DOWN	DOWN	
4	***	DOWN	UP	UP	
5	***	DOWN	UP	DOWN	
6	***	DOWN	DOWN	UP	
7	***	DOWN	DOWN	DOWN	

*** = Don't Care

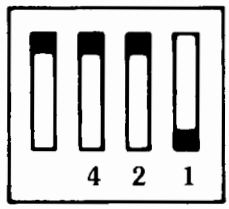

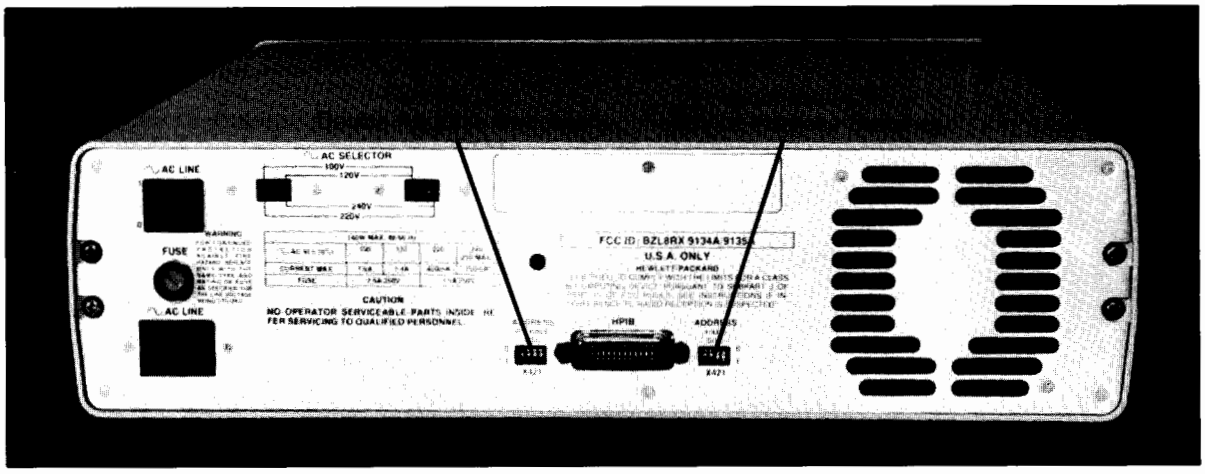

Figure 6-3 . Device Address Switch Setting

Refer to Figure 6-4 for a list of the HP-IB interface cables used with HP computers.

HP-IB Interface Restrictions:

1. All the AC line switches must be turned "OFF" when connecting (and disconnecting) devices to your system.
2. The total length of cable permitted in one bus system must be less than or equal to two metres times the number of devices connected together (the interface card is counted as one device).
3. The total length of the cable must not exceed 20 metres. For example, a system containing six devices can be connected together with cables that have a total length less than or equal to 12 metres (six devices x 2m/device = 12 metres). The individual lengths of cable can be distributed in any manner desired as long as the total length does not exceed the allowed maximum. If more than 10 devices are to be connected together, ca-

Length	Accessory Number
1 metre	10833A
2 metres	10833B
4 metres	10833C
.5 metres	10833D

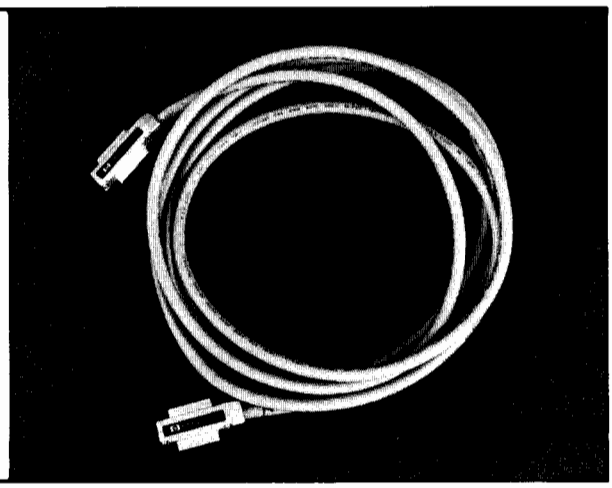

Figure 6-4. HP-IB Interface Cables

bles shorter than two metres must be used between some of the devices to keep the total cable length less than 20 metres.

4. The maximum number of devices that can be connected together in one bus system is 15.
   There are no restrictions to the way cables may be connected together; however, it is recommended that no more than four piggyback connectors be stacked together on one device. The resulting structure could exert enough force on the connector mounting to damage it.

Cleaning the Case

The disc memory case has been painted with a durable, long lasting, non-toxic paint. It will preserve the appearance of the disc memory for many years. The following instructions for cleaning below will not harm the quality finish.

CAUTION

CHEMICAL SPRAY-ON CLEANERS USED FOR APPLIANCES AND OTHER HOUSEHOLD AND INDUSTRIAL APPLICATIONS MAY DAMAGE THE CASE FINISH. THESE OR OTHER CHEMICAL CLEANERS SHOULD NOT BE USED. DO NOT USE DETERGENTS THAT CONTAIN AMMONIA, BENZENES, CHLORIDES, OR ABRASIVES.

Before cleaning the disc memory case, disconnect the power cord and any interconnecting cables. Dampen a clean, soft, lint-free cloth in a solution of clean water and mild soap. Wipe the soiled areas of the case, ensuring that no cleaning solution gets inside the unit. For cleaning more heavily soiled areas, a solution of 80 % clean water and 20 % isopropyl alcohol may be used. Wipe the case areas that had cleaning solution applied with a clean, soft, lint free cloth dampened in clean water, then dry the case with a dry, soft, clean cloth. A non-abrasive eraser may be used to remove pen and pencil marks.

Section III HP 9133V, 9133XV, and 9134XV Disc Memory Products

Computer Museum

Chapter 1
Controller & Power Supply Theory of Operation

- General Description
- Power Supply Theory of Operation
- Controller Theory of Operation

General Description

This section describes the 5 1/4-inch Winchester disc drive as used in HP 9133V, 9133XV, and 9134XV Disc Memories:

The 9133V/XV and 9134XV Family

	V (5-Mbyte) Winchester	XV (15-Mbyte) Winchester	3 1/2-inch Flexible Disc
HP 9133V	X		X
HP 9133XV		X	X
HP 9134XV		X	

The Winchester drive in these products is available in three configurations. The 9133V can be configured as either a single volume of 4.8-Mbytes or four volumes of 1.15-Mbytes for a total of 4.6-Mbytes. The 9133XV and 9134XV are always configured as a single volume of 14.5-Mbytes capacity.

All three configurations are accomplished by jumper selection on the PCA; the firmware does not change. The user's mainframe must have an operating system designed to support the selected configuration.

Table 1-1 summarizes these configurations.

Table 1-1

Option	Logical Configuration	Formatted Capacity	Jumper Configuration (J3 Pins)
Standard-V	single volume	4.8-Mbyte	C 00 (Removed) B XX (Installed) A XX (Installed)
004-V	four volumes, 1.15-Mbyte each	4.6-Mbyte	C 00 (Removed) B 00 (Removed) A XX (Installed)
Standard-XV	single volume	14.5-Mbyte	C XX (Installed) B 00 (Removed) A XX (Installed)

Figure 1-1 shows the 9133-69508 Controller PCA with the jumper positions listed above visible and called out:

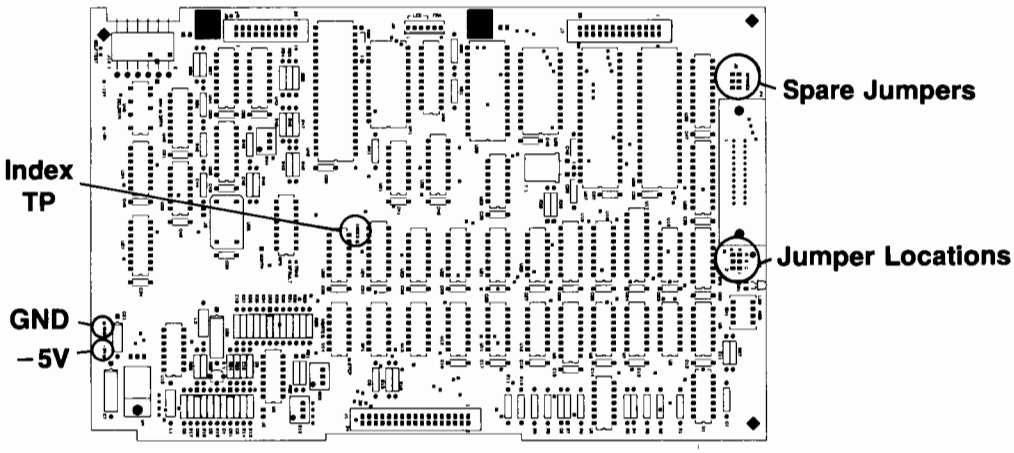

Figure 1-1. The 09133-69508 Controller PCA

Product Hardware Assemblies

Table 1-2 lists by part number the assemblies associated with the Winchester drive.

Table 1-2. Product Hardware Assemblies

Product	Drive Model	Drive Part No.	Drive Electronics	Controller	ROM-IC
HP 9133V	ST406	09133-69100	09133-69103	09133-69508	09133-15520
HP 9133XV	ST419	09133-69104	09133-69105	09133-69508	09133-15520
HP 9134XV	ST419	09133-69104	09133-69105	09133-69508	09133-15520

Winchester drive models used in the 9133V/XV and 9134XV products:

ST406 - Single-Platter 5-Mbyte (improved track density)
ST419 - Triple-Platter 15-Mbyte (improved track density)

Power Supply Theory of Operation

Refer to Figure 1-2 while reading the following discussion of the power supply.

Introduction

The same power supply is used for the HP 9133V/XV and 9134XV. All power to the 3 1/2-inch Flexible Disc Drive is routed through the lower board of the 3 1/2-inch controller (09133-69507). The 5V line to the drive is not enabled until the PVAL line from the power supply enables it. The fan is powered by -12V and is connected to the Winchester controller PCA. The power supply brings the +5V and -12V to the Winchester controller and -5V is generated from the -12V line on the controller. The -5V line is used for the phase-lock loop circuitry. The front panel LEDs are connected to 5V on the Winchester disc controller.

This power supply is a 95-watt switching supply that provides outputs of +5V at 5.6 amperes, +12V at .5 amperes, (1.5 ampers maximum surge), +12VP at 2.7 ampers (4.5 amperes maximum surge), and -12V at 0.6 amperes. The +12VP output is a dedicated

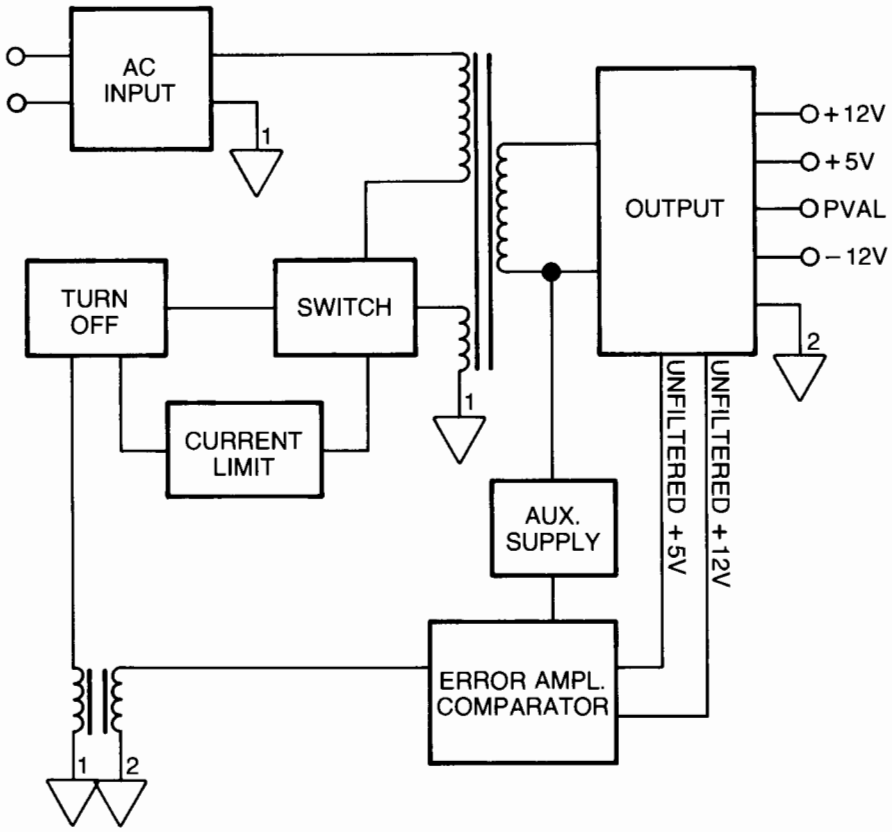

Figure 1-2. Power Supply Block Diagram

+12V supply for the Winchester disc drive. The power-on reset signal is also produced by the power supply. Details of the power supply circuitry are provided in the following paragraphs.

AC Input Circuits

The AC line voltage is connected to the power supply through a printed circuit board (PCB) mounted line cord recptacle. A PCB-mounted power on/off switch controls both sides of the AC line into the power supply. There is a fuse in the hot side of the AC input following the power switch. The fuse value for 115 VAC is 3 amperes and for 230 VAC is 2 amperes. A line filter following the fuse reduces the level of the line transients entering the power supply and the amount of switching noise leaving the power supply.

Also associated with the input circuitry is a line voltage switch that selects nominal voltages of 115 VAC or 230 VAC. When the switch is in the 115 VAC position, a surge voltage protection device protects the power supply from damage if it is inadvertantly connected to 230 VAC. A blown line fuse is the only damage that can occur.

A diode array and several capacitors rectify and filter the incoming AC lines. Included in this network are two thermistors that limit the initial power on surge current to approximately 25 amperes peak at 115 VAC and 230 VAC.

Power-on Reset

The power-on reset circuit in the power supply produces the Power-Valid signal, PVAL. This signal can only source current. At power-on, a pull-down resistor on the Winchester controller PCA keeps PVAL low for at least 100 milliseconds after the +5V output exceeds 4.75V. PVAL is then driven HIGH and remains HIGH while the +5 output is in spec. PVAL is turned off, allowing the pull-down resistor to cause a low level at least 500 microseconds before the +5V output falls below 4.75V.

The Winchester controller PCA uses PVAL to generate RESET, which resets all logic on both controllers. In addition, PVAL is used by the flexible disc controller to withhold +5V from the 3 1/2-inch drive during power-on.

Controller Theory of Operation

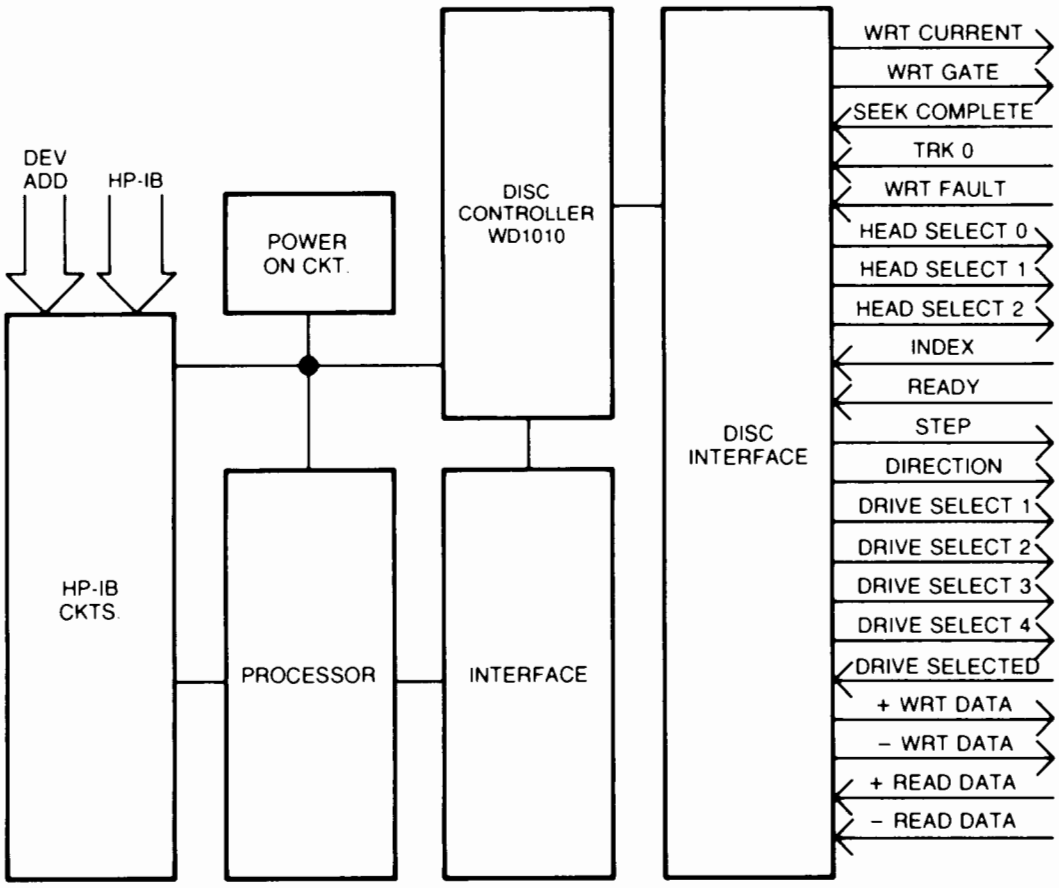

Figure 1-3. Controller Block Diagram

Microprocessor Circuit

The microprocessor is a 68B09 8-bit processor with a 2-MHz bus rate. Timing is provided by an internal oscillator which drives an 8-MHz crystal. The output of the oscillator is divided by four to provide two 2-Mhz signals (E and Q). The signals are phase shifted 90 degrees with respect to each other, so that Q leads E. The address present on the address bus is valid whenever either E or Q is high.

Program memory for the microprocessor is stored in an 8-Kbyte ROM. The ROM is selected whenever address line A15 is high and the VMA (valid memory address = E+Q) is high.

Scratch-pad memory for the processor consists of 128 bytes of RAM. The RAM is selected by three of the chip select lines provided on the chip. The condition necessary to select the RAM is A15 low and A07 high and E high.

Disc Controller, HP-IB Chip, Input and Output Ports

The disc controller HP-IB chip (8291A) and input and output ports are selected by strobe lines from a 3-line to 8-line decoder. The decoder is selected when VMA = Q+E and the ROM is not selected (A15 low). When the decoder is selected, one of the 8 output lines is pulled low depending on the sense of address lines A05, A06, and A07. The four outputs that correspond to A07 being 1 are not used since the RAM is addressed when this occurs.

The input port is 8 bits wide. The bit assignments are as follows:

BIT 7--Not Used
BIT 6--LED_ON_L (CURRENT STATE OF SELFTEST LED)
BIT 5--C
BIT 4--B } (SEE FIGURE 1-1 FOR CONFIGURATIONS SELECTED)
BIT 3--A
BIT 2--ADDR2_L (MSB OF HP-IB ADDRESS)
BIT 1--ADDR1_L
BIT 0--ADDR0_L (LSB OF HP-IB ADDRESS)

The output port is 8 bits wide. The bit assignments are as follows:

BIT 7--BUFFER_READY_H
BIT 6--LED_ON L
BIT 5--NOT CONNECTED
BIT 4--NO ASSIGNMENT
BIT 3--PRE_COMP_DISABLE_H
BIT 2--BUFFER_COUNTER_CLEAR_L
BIT 1--NOT CONNECTED
BIT 0--WD RESET_L

The disc controller chip provides most of the control signals needed by the drive. It communicates with the microprocessor through 7 input and output registers and an external RAM buffer. The disc controller chip keeps track of which cylinder the head is positioned over, and when it is necessary to move the head. It controls the direction line and issues the appropriate number of step pulses. It also does the parallel-to-serial conversion, MFM encoding, and generates the precomp control signals necessary for a write operation. On a read operation, the disc controller chip does the MFM decoding, and the serial-to-parallel conversion. The disc controller chip also provides verification of sector headers, control of the phase-lock loop, checking of the error detecting CRC bytes, and automatic initiation of 8 to 16 retries if an error is detected.

The data separator reconstructs the clock from the incoming MFM-encoded bit stream and generates a 5-MHz clock with phase relationship to the incoming data such that nominal data transitions are centered on one level of the read clock and nominal clock transitions are centered on the other level. The read clock is generated by dividing down a 10 MHz clock that is phase locked to a delayed copy of the incoming data. The phase-lock loop uses a digital phase detector whose output is pump-up or pump-down pulses with a pulse width proportional to the phase error. The phaseup line is provided to allow the VC0 (Voltage Controlled Oscillator) to be started up in phase with the incoming data signal to minimize lock-up time.

Chapter2
Assembly Access

- **Introduction**
- **Safety Considerations**
- **Assembly Access**

Introduction

This chapter describes access to 9133V/XV and 9134 XV Disc Memories and the removal of the Winchester disc drive, the printed circuit assemblies (PCAs) controlling it, and the power supply used in all three products.

Safety Considerations

General

This product and related documentation must be reviewed for familiarization with safety markings and instructions before operation.

Safety Symbols

Instruction manual symbol: the product will be marked with this symbol when it is necessary for the user to refer to the instruction manual in order to protect the product against damage.

Indicates hazardous voltages.

Indicates earth (ground) terminal (sometimes used in manual to indicate circuit common connected to grounded chassis.

WARNING

The WARNING sign denotes a hazard. It calls attention to a procedure, practice, or the like, which, if not correctly performed or adhered to, could result in injury. Do not proceed beyond a WARNING sign until the indicated conditions are fully understood and met.

CAUTION

The CAUTION sign denotes a hazard. It calls attention to an operating procedure, practice, or the like, which if not correctly performed, could result in damage to, or destruction of, part or all of the product. Do not proceed beyond a CAUTION sign until the indicated conditions are fully understood and met.

Safety Earth Ground

This is a safety class I product and is provided with a protective earthing terminal. An uninterruptible safety earth ground must be provided from the main power source to the product input wiring terminals, power cord, or supplied power cord set. Whenever it is likely that the protection has been impaired, the product must be made inoperative and be secured against any unintended operation.

Before Applying Power

Verify that the product is configured to match the available main power source per the input power configuration instructions provided in this manual, and that the correct primary fuse rating is installed.

If this product is to be energized via an auto-transformer (for voltage reduction), make sure the common terminal is connected to the earth terminal of the main power source.

Servicing

Any servicing, adjustment, maintenance or repair of this product must be performed only by service-trained personnel.

Adjustments described in this manual may be performed with power supplied to the product while protective covers are removed. Energy available at many points may, if contacted, result in personal injury.

Capacitors inside this product may still be charged even when the product is disconnected from its power source.

To avoid a fire hazard, only fuses with the required current rating and of the specified type (normal blow) are to be used for replacement.

Assembly Access

NOTE

Disassembly instructions are written as if viewing the disc device from the front. That is, right = the viewer's right; left = the viewer's left; "front" = the front of the device; and "rear" = the rear of the device.

Assembly Designations

The following assembly numbers are used to designate cable connections:

A1	Winchester Controller PCA (09133-69508)
A2	Winchester Drive
A3	Winchester Drive Electronics PCA
A4	Power Supply
A5	3 1/2-inch Drive
A6	3 1/2-inch Drive Controller, Upper Board (09133-69506)
A7	3 1/2-inch Drive Controller, Lower Board (09133-69507)

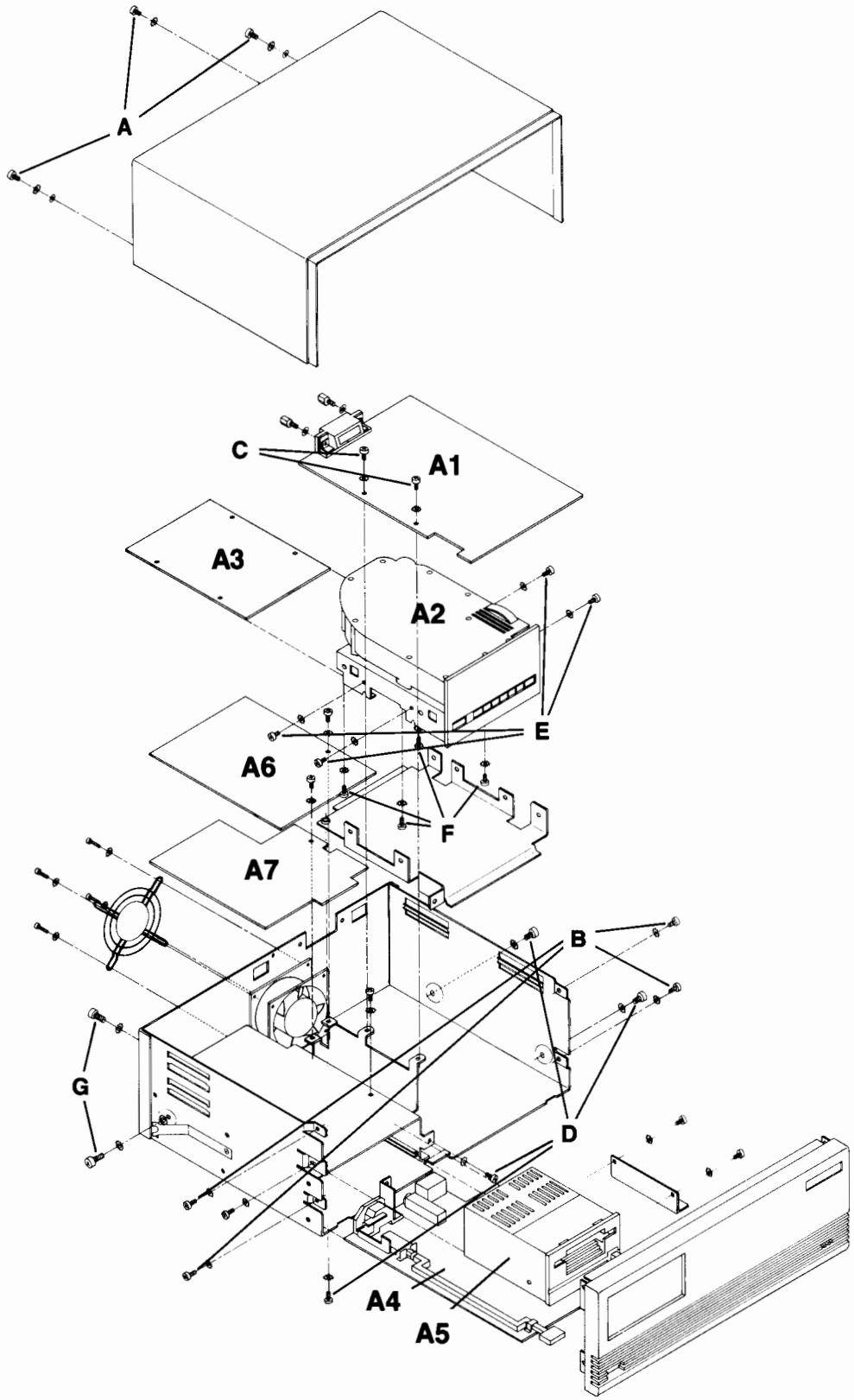

Figure 2-1. The 9133V/XV Exploded View

Top Cover Assembly Removal

The Top Cover Assembly consists of an injection molded plastic shroud and a steel shield shroud. To remove the assembly, remove three screws on the rear of the disc memory (marked "A" in Figure 2-1.)

DO NOT LIFT THE COVER. Instead, slide the cover assembly to the rear until it is clear of the front panel and the HP-IB connector nuts. Then lift the cover assembly from the disc memory. See Figure 2-2.

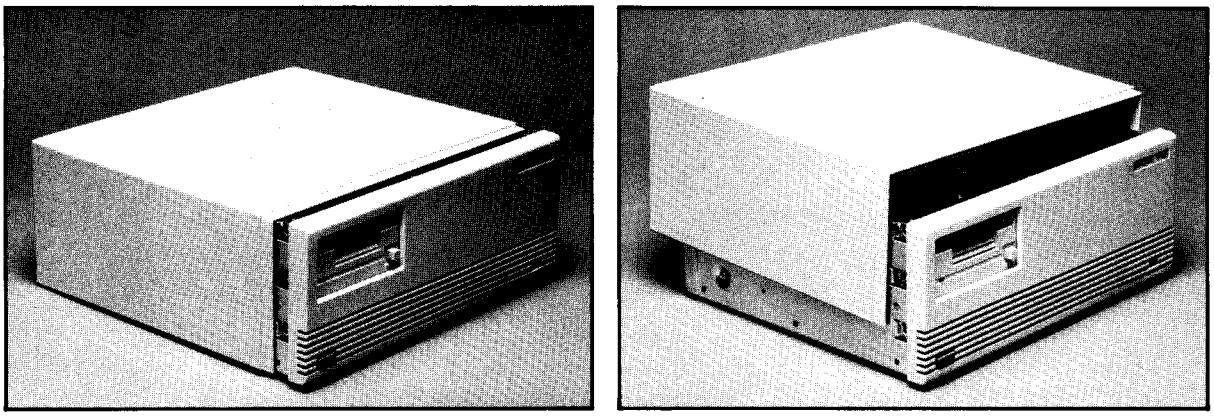

Figure 2-2. Top Cover Assembly Removal

Front Panel Removal

The Front Panel Assembly must be removed for access to the Winchester drive. The controller board (09133-69508) can be can be removed without removing the Front Panel Assembly.

The Front Panel assembly consists of an injection molded plastic panel and a steel shield.

Remove the assembly as follows:

1. Remove the four-pin LED cable plug from A1J8. See Figure 2-3.
2. Remove four screws marked "B" , two on each side of the disc memory.
3. Slide the panel to the front, clear of the disc memory.

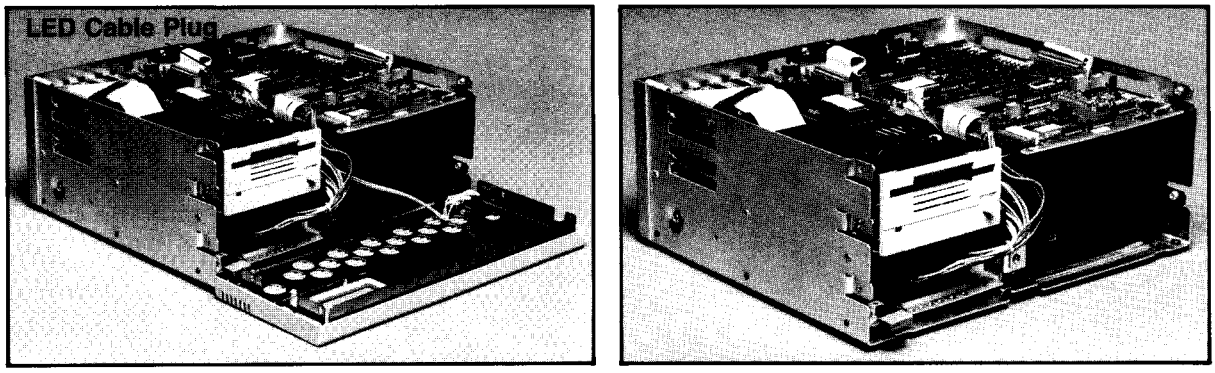

Figure 2-3. Front Panel Removal

Controller PCA Removal

The controller PCA (09133-69508) in the disc memory is located above the Winchester drive. The board can be removed without removing the drive.

To remove the board proceed as follows:

1. Detach cables from A1J1, A1J7, A1J8, A1J9, and A1J10.
2. Remove two mounting screws (labelled "C" in Figure 2-1) from the left side of the board.
3. Remove the HP-IB connector nuts from the rear of the chassis.
4. Lift the board clear of the chassis.

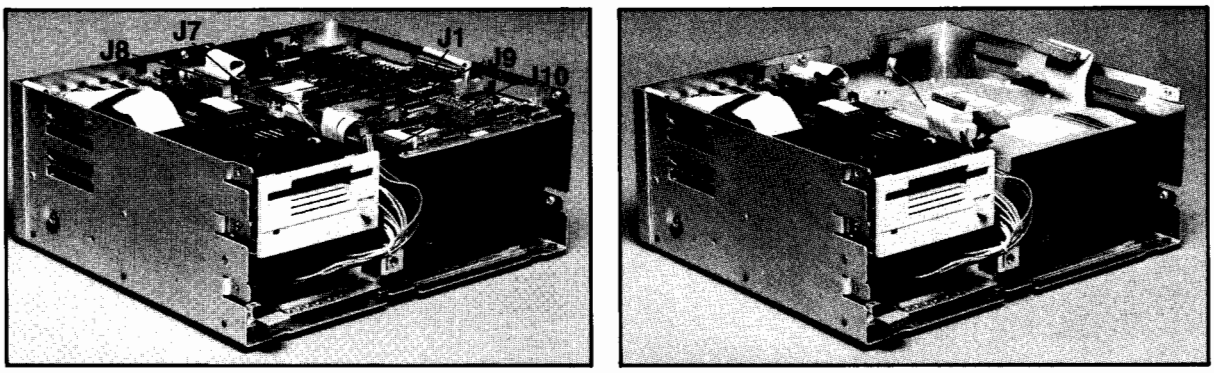

Figure 2-4. Controller PCA Removal

During reassembly, note that the board slides into lanced board guides on the right side of the chassis.

Drive Assembly Removal

The Winchester Drive Assembly consists of the Winchester Drive, the Drive Electronics PCA, and the Winchester Mounting Bracket. To remove the Winchester Drive Assembly, it is necessary first to remove the Top Cover Assembly, the Front Panel Assembly, and the Controller Board PCA.

With this done, proceed as follows:

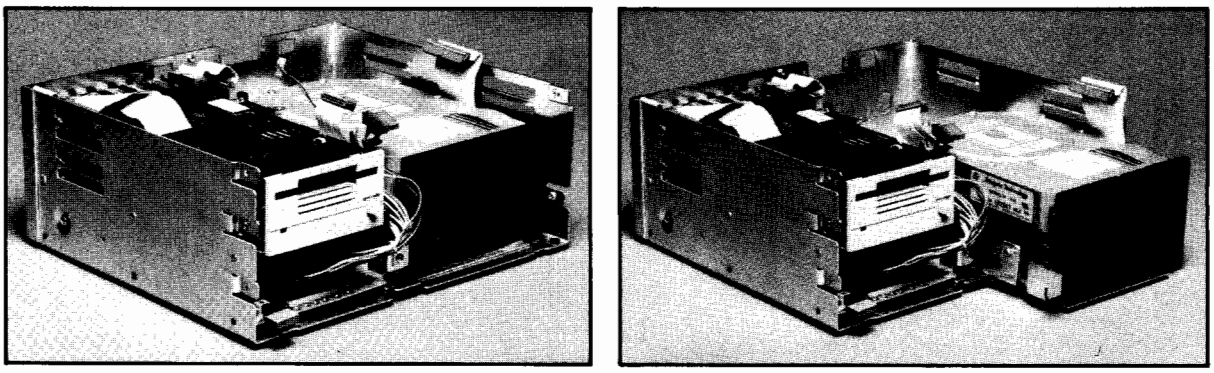

Figure 2-5. Drive Assembly Removal

1. Remove four mounting screws marked "D" on Figure 2-1. Two screws are located on the lower right side of the chassis, an other on the front mounting tab, and the fourth from the bottom.
2. Slide the drive assembly forward and remove the power cable assembly plug from A3J3 (Drive Electronics Board).
3. Slide the Drive Assembly out of the front of the chassis.

Drive Mounting Bracket Removal

1. Remove the Drive Assembly from the chassis as described above.
2. Remove the read/write cable and the disc controller cable from the rear of the Drive Assembly
3. Turn the Drive Assembly upside down. Remove four screws (marked "E" in Figure 2-1) from the sides of the assembly; lift off the mounting bracket.

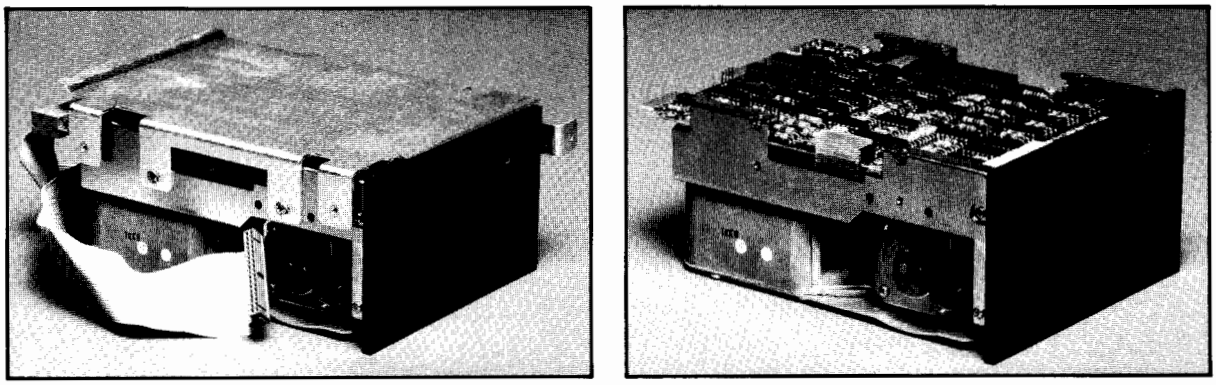

Figure 2-6. Drive Mounting Bracket Removal

Drive Electronics PCA Removal

1. Remove the Drive Assembly and Drive Mounting Bracket as described above.
2. With the Drive still upside down, remove plugs P4, P5, P6, P7, and P8 from A3J4, A3J5, A3J6, A3J7, and A3J8. (Because these plugs are labelled only with stickered labels, notation of the wire codes and pins to which each wire in P6, P7, and P8 is connected is advisable.)

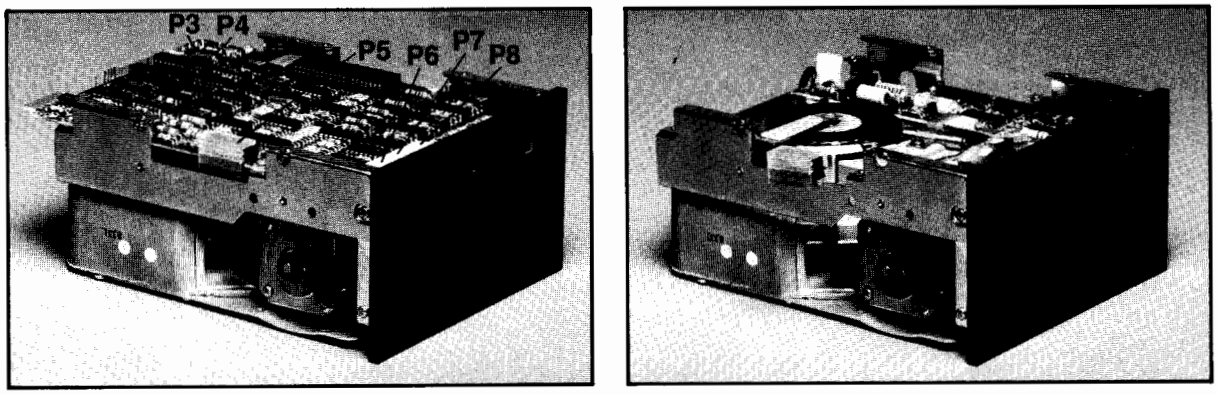

Figure 2-7. Drive Electronics PCA Removal

3. Remove four screws labelled "F" in Figure 2-1. Carefully slide the board to the rear of the box frame and clear of the Drive Assembly. See Figure 2-7.

Replaceable Assemblies

The Winchester Drive and the Drive Electronics PCA are replaceable assemblies. The Mounting Bracket is not a replaceable assembly. If a defective assembly is to be returned for replacement, only the specific defective assembly should be returned. See Figure 2-8.

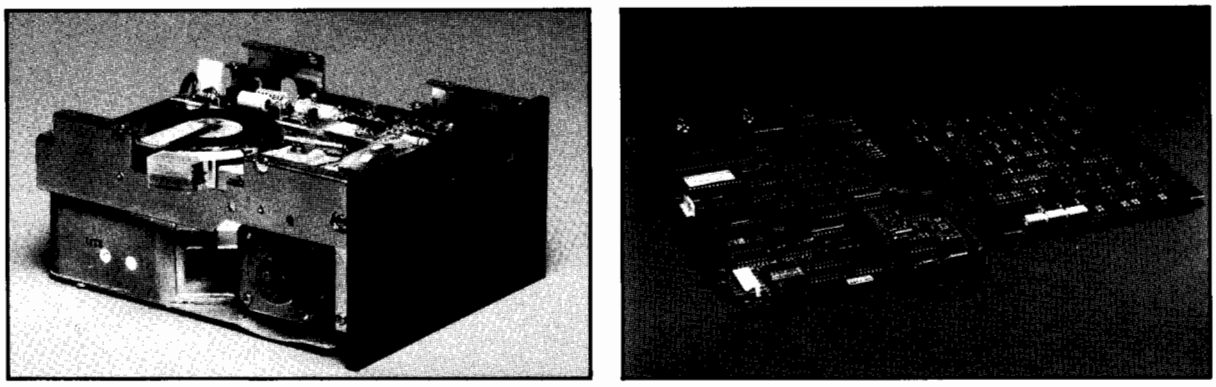

Figure 2-8. Replaceable Assemblies

Power Supply Removal

To remove the Power Supply, it is necessary first to remove the Top Cover Assembly and the Front Panel Assembly. With this done, proceed as follows:

1. Remove two screws marked "G" in Figure 2-1. One is on the left side of the chassis, and the other is on the rear of the chassis.
2. Disconnect the power harness connector from the front of the power supply assembly A4J2. Slide the power supply forward and pull it out of the chassis.
3. The Power Supply Assembly is a replaceable assembly. When replacing a defective assembly, do not return the power guard. See Figure 2-9.

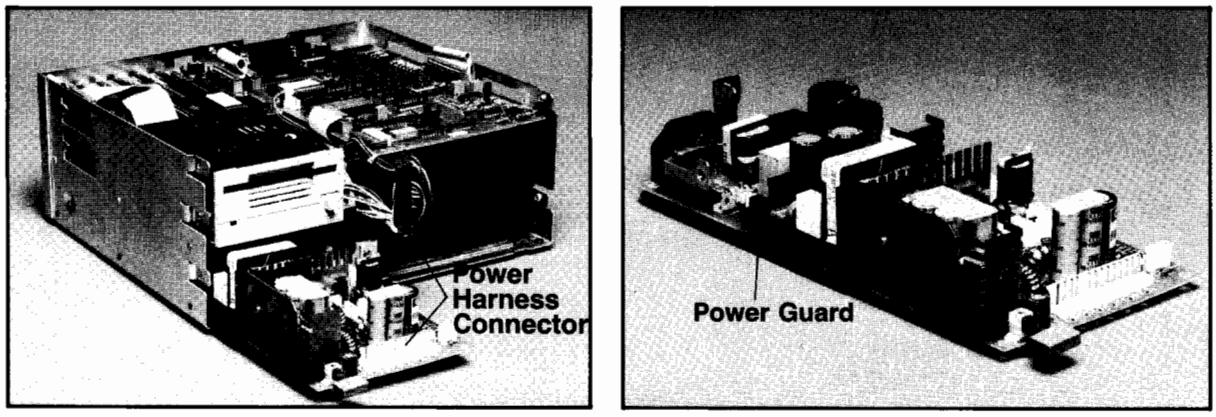

Figure 2-9. Power Supply Removal

Chapter 3
Replaceable Parts

- **Introduction**
- **Replaceable Parts List**

Introduction

This chapter contains the replaceable parts list for the Winchester drive, the power supply, and the case assembly.

The check digit shown in the CD column is required when ordering a part from HP. Please include this number with your order.

The Winchester disc drive, its controller and drive electronics PCAs are "exchange only" assemblies and are not broken down to any lower level.

The various products are listed with a "Usage Code" assigned to each product. The usage code shows how many, and on what product, the parts are used. The parts which do not have a usage code, are used on all of these products.

Replaceable Parts List

Level	Reference Designator	HP Part No.	CD	Description	Usage Code
		9133V		Disc Memory	A
		9133XV		Disc Memory	B
		9134XV		Disc Memory	C
		Case Parts			
1		0403-0427	1	BUMPER FOOT	
1		0510-1237	0	FASTNER	
1		07940-00026	7	FAN GUARD	
1		07940-40048	7	FRONT PANEL-9134	C
1		07940-40062	5	SHAFT SWITCH	
1		09121-48301	4	BUTTON, PUSH	
1		09121-48303	6	FOOT-MOLDED	
1		09133-00602	2	FRT SHIELD-33	A,B
1		09133-00604	4	FRT SHIELD-9134	C
1		09133-01202	0	WIN. BRKT	
1		09133-20101	8	CHASSIS - 9133	A,B
1		09133-40201	1	FRT PNL- 9133	A,B
1		09144-45404	9	GUARD, POWER	
		Electrical Assemblies			
1		09133-42501	8	LIGHT PIPE	
1		09133-61601	9	POWER HARNESS	
1		09133-61602	0	DISC CTLR CABLE	
1		09133-61603	1	DISC R/W CABLE	
1		09133-61604	2	HPIB CABLE	A,B

Replaceable Parts List

Level	Reference Designator	HP Part No.	CD	Description	Usage Code
1		09133-61606	4	LED/PWR CABLE	
1		09133-68501	2	FAN ASSY	
1		09133-84304	7	FRT PNL LABEL-33	A,B
1		09133-88865	3	SHIELD/SHROUD ASSY	
1		**~~5061-3144~~**	**4**	**POWER SUPPLY**	
1		8120-1378	1	CABLE-POWER	
		09133-67120			
		Fuses			
1		2110-0003	0	FUSE-3AMPS NB	
1		2110-0002	9	FUSE 2A 250V	
		Exchange Assemblies			
1	**A2**	**09133-69100**	**9**	**5 MBYTE DRIVE**	**A**
1	**A3**	**09133-69103**	**2**	**5 MBYTE ELEC BD**	**A**
1	**A2**	**09133-69104**	**3**	**15 MBYTE DRIVE**	**B,C**
1	**A3**	**09133-69105**	**4**	**15 MBYTE ELEC BD**	**B,C**
1	**A1**	**09133-69508**	**1**	**HRD DISC CTLR BD**	
.2	CR1	0122-0070	4	DIO-VVC IN5456A	
.2	C4,5,8,19	0160-4571	8	C-F .1UF + 80	
.2	C38,48	0160-4788	9	C-F 18PF 5% 100V	
.2	C2,42	0160-4803	9	C-F 68PF 5% 100V	
.2	C1,11	0160-4805	1	C-F 47PF 5% 100V	
.2	C44	0160-4807	3	C-F 33PF 5% 100V	
.2	C3,6,10	0160-4810	8	C-F 330PF 5%	
.2	C9	0160-4832	4	C-F .01UF 10%	
.2	C12-18,22-37,39-41, C43,45-47,49-53	0160-5332	1	C-F .1UF 20% 50V	
.2	C21	0180-0197	8	C-F 21UF 20V	
.2	C7,20	0180-1746	5	C-F 15UF 20V	
.2	Y1	0410-0779	1	CRYSTAL	
.2	R1,2,4-6,8,10,11,38,40 R50-55,58	0683-1025	9	R-F 1K 5% .25W	
.2	R9	0683-2215	1	R-F 220 OHM .05	
.2	R29,35	0698-3132	4	R-F 261 OHM .01	
.2	R23,24	0698-4451	2	R-F 340 OHM .01	
.2	R19	0698-4471	6	R-F 7.15K 1%	
.2	R32,34	0757-0284	7	R-F 150 OHM 1%	
.2	R16,21,22,57	0757-0401	0	R-F 100 OHM .01	
.2	R14,25-27,41,56	0757-0411	2	R-F 332 OHM 1%	
.2	R31,33	0757-0413	4	R-F 392 OHM 1%	
.2	R28,37,42,43,47	0757-0416	7	R-F 511 OHM .01	
.2	R17	0757-0417	8	R-F 562 OHM 1%	
.2	R30,36	0757-0424	7	R-F 1.1K 1%	
.2	R18,45,46	0757-0437	2	R-F 4.75K 1%	
.2	R3,13,39,48,49	0757-0442	9	R-F 10.0K 1/8W	
.2	R7	0757-0444	1	R-F 12.1K .01	
.2	R15	0757-0465	6	R-F 100K .01	
.2	U42	1200-0654	7	SKT-IC 40-CIBT	
.2	U39	1200-0861	8	SKT-IC 28-CONT	
.2	J2,5	1251-5380	3	CONN 2 PIN M	
.2	J10	1251-5533	8	CONN-POST-TP-HDR	
.2	J3,6	1251-6515	8	CONN-POST-TP-HDR	
.2	P4	1251-7651	5	CONN 24-PIN M	
.2	J8	1251-7967	6	CONN-POST-TP-HDR	

Computer Museum

Replaceable Parts List

Level	Reference Designator	HP Part No.	CD	Description	Usage Code
.2	J9	1251-8681	3	20 PIN CONNECTOR	
.2	J7	1251-8682	4	CONNECTOR,26 PIN	
.2	J1	1251-8683	5	CONNECTOR,34 PIN	
.2		1258-0141	8	JUMPER-REM	
.2	RP1	1810-0182	9	NTWK-R24XMULTDIP	
.2	RP2,3	1810-0235	3	NTWK-R15X21KDIP	
.2	U26	1813-0067	5	XTAL-CLK-OSC	
.2	U46	1813-0346	3	DLAY LINE 60NSEC	
.2	U41	1818-1178	1	IC MK 4118AN-3	
.2	U38	1818-1751	6	IC MCM68B10P	
.2	U13	1820-0471	0	IC SN7406N	
.2	U2,14,23	1820-0621	2	TTL BUFF 7438N	
.2	U15	1820-0681	4	IC SN74SOON	
.2	U1	1820-0683	6	IC SN74S04N	
.2	U12,33	1820-0693	8	IC SN74S74	
.2	U29	1820-1112	8	IC 74LS74	
.2	U34	1820-1158	2	IC SN74S51N	
.2	U27	1820-1191	3	IC SN74S175	
.2	U30,45	1820-1195	7	IC 74LS175	
.2	U18	1820-1196	8	IC SN74LS174N	
.2	U11,20	1820-1197	9	IC 74LS00	
.2	U16,21	1820-1199	1	IC 74LS04	
.2	U22	1820-1202	7	IC 74LS10N	
.2	U8	1820-1206	1	IC SN74LS27N	
.2	U19,24	1820-1216	3	IC SN74LS138	
.2	U6	1820-1285	6	IC SN74LS54N	
.2	U5	1820-1367	5	IC SN74S08N	
.2	U25	1820-1416	5	TTL TRGR 74LS14N	
.2	U9	1820-1423	4	TTL SN74LS123N	
.2	U7	1820-1425	6	IC SN74LS132N	
.2	U10	1820-1568	8	IC SN74LS125AN	
.2	U32	1820-1782	8	IC 26S02	
.2	U17	1820-2024	3	IC SN74LS244	
.2	U40	1820-2075	4	IC SN74LS245N	
.2	U31	1820-2096	9	IC SN74LS393N	
.2	U44	1820-2203	0	IC AM26LS32PC	
.2	U28	1820-2483	8	IC SN75161N	
.2	U35	1820-2485	0	IC SN75160N	
.2	U36	1820-2549	7	IC 8291AP	
.2	U37	1820-2624	9	IC 68B09	
.2	U43	1820-2749	9	IC AM26LS31PC	
.2	U4	1826-0445	0	IC UA7905UC	
.2	Q1	1854-0215	1	XSTR-2N3904	
.2	U3	1858-0086	2	XSTR ARRAY	
.2	CR2,3	1901-1098	1	DIO-1N4150	
.2	CR4	1990-0450	4	LED-LMP	
.2	R20	2100-3863	5	RES-VAR 200 10%	
.2	R12,44	2100-3874	8	RES-VAR 5K 10%	
.2		2200-0521	8	SCR-MACH 4-40	
.2		2260-0002	6	NUT-HEX 4-40	
.2		2200-0107	6	SCR-MACH 4-40	
.2	SW1	3101-2264	1	SW-RKR 4-1A	
.2	L1,2	9100-3913	3	IDCTR 3.3UH 5%	
.2	U39	09133-15520	4	COYOTE E PROM	
.2	U42	1820-3168	8	IC WD1010	

Chapter 4
Technical Specifications
Controls and Indicators

- HP 9133V/XV Disc Memory
- HP 9134XV Disc Memory

HP 9133V/XV Disc Memories

The HP 9133V and the 9133XV Disc Memories (Figure 4-1) are random access data storage devices; they each contain a 5 1/4-inch Winchester disc and a 3 1/2 inch flexible disc drive.

The 9133V is available with the Winchester disc configured as a single volume with a formatted capacity of 4.8 Mbytes, or as four volumes with a formatted capacity of 1.15 Mbytes per volume as Option 004. The four volume configuration emulates an HP 9895A 8-inch flexible disc drive master with three slave drives, and can be operated by any computer which supports the 9895A.

The 9133XV is available only with the Winchester disc configured as a single volume with a formatted capacity of 14.5Mbytes.

The 3 1/2-inch flexible disc drive in the 9133V and 9133XV emulates an HP 9121S flexible disc drive and can be operated by any computer which supports the 9121S or 82902M flexible disc drives.

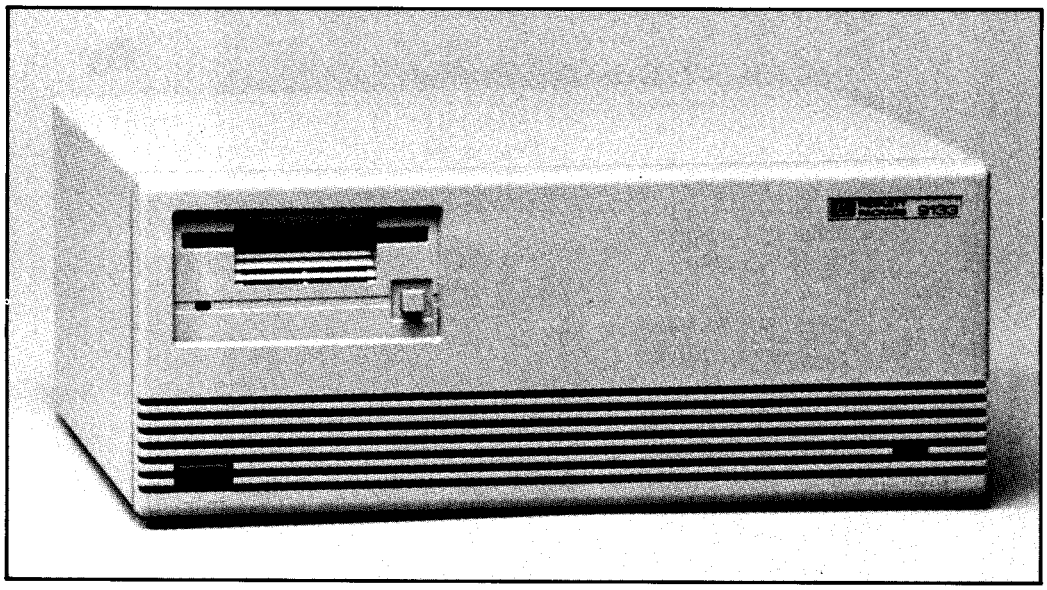

Figure 4-1. HP 9133V/XV Disc Memory

Technical Specifications

Listed below are the physical, electrical, and environmental specifications for the HP 9133V/XV disc memories.

Unit Specifications

Power Requirements:	
Source (selected by rear panel switch)	90 to 125Vac 180 to 250Vac
Line Frequency	48 to 66 Hz
Power Consumption(max)	125W
Environmental Range:	
Operating Temperature	10° to 40° C (50° to 104° F)
Storage Temperature	-40° to 60° C (-40° to 140° F)
Operating Humidity (non-condensing, 25° C max wet bulb temperature)	20% to 80%
Storage Humidity (non-condensing)	5% to 95%
Operating Altitude	0 to 4572m (0 to 15000 ft)
Storage Altitude	-304 to 1524m (-1000 to 50000 ft)
Size/Weight:	
Height	125mm (4.9 in)
Width	325mm (12.8 in)
Depth	285mm (11.2 in)
Net Weight	10kg (22 lb)
Shipping Weight	16.8kg (37 lb)

Drive Specifications

Characteristics	5 Mbyte Winchester 9133V	15 Mbyte Winchester 9133XV
Formatted Capacity:		
Bytes per Unit	4.8M (Opt. 004: 4.6M)	14.5M
Bytes per Sector	256	256
Sectors per Track	31 (Opt. 004: 30)	31
Tracks per Surface	305	305
Surfaces per drive	2	6
Tracks per inch	345	345
Max Sustained Transfer Rate*	50kBytes/sec	50kBytes/sec
Average Access Time	85msec	85msec
Rotational Speed	3600rpm	3600rpm

*Mainframe dependent

NOTE

There is no write protect capability on the Winchester drive. Caution must be used to avoid writing over data stored on the Winchester disc.

Controls and Indicators

The location of all controls and indicators on the disc memory are shown in Figure 4-2. Front panel controls and indicators are a primary power LINE switch, a FAULT indicator, an ON LINE indicator for the Winchester disc drive, and a disc access indicator for the 3 1/2-inch flexible disc drive. Rear panel controls and indicators are the DISC ADDRESS switches, the VOLTAGE SELECT switch, the TEST switch adjacent to the FLEXIBLE DISC ADDRESS switches, and the selftest indicators for the flexible disc and the Winchester disc.

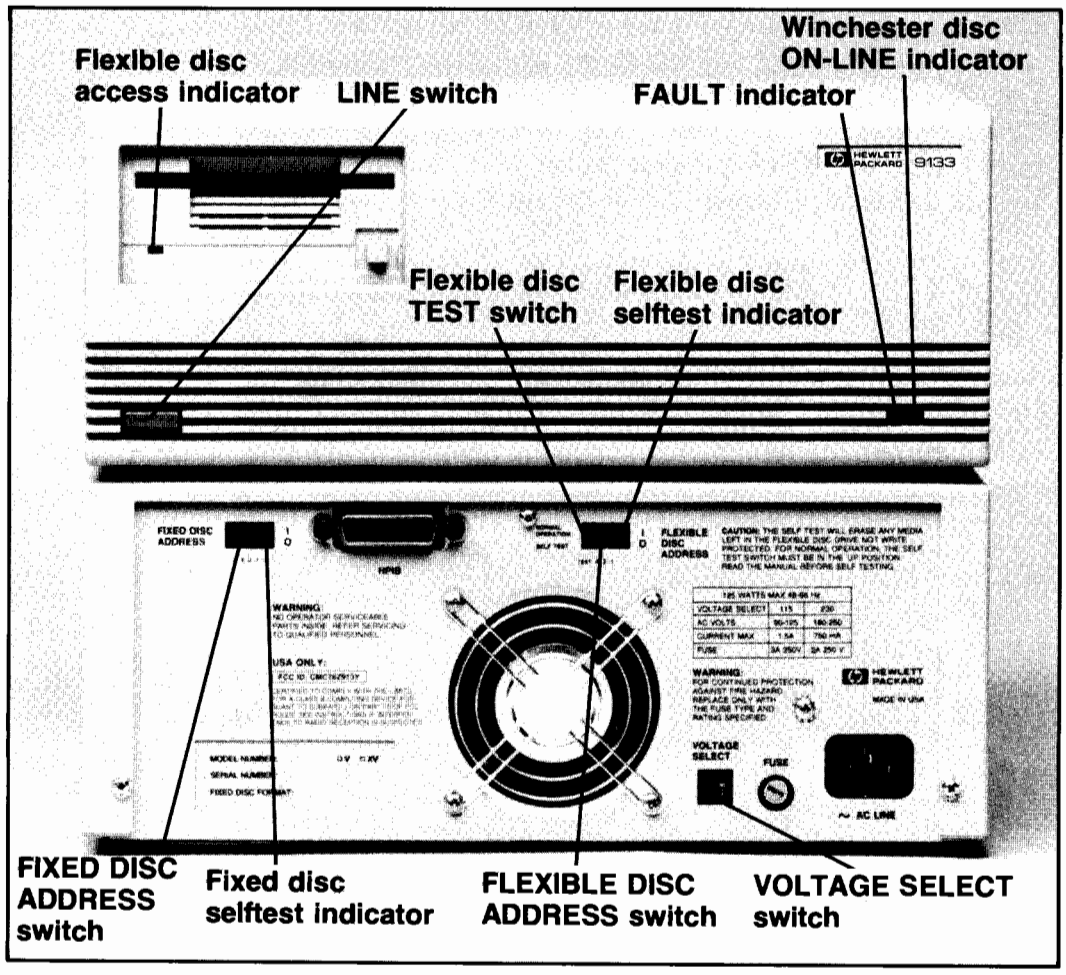

Figure 4-2. Controls and Indicators

The LINE switch controls the application of AC power to the disc memory. It is depressed to apply power, and depressed again to remove power.

The FAULT indicator is on whenever the selftest indicator of either disc drive is on. It is normally on during the power-up selftest, selftest initiated by a command from the computer, or when a fault exists in either disc drive. It also indicates the results of the user-confidence selftest initiated by the TEST switch on the rear panel of the disc memory. If the FAULT indicator remains on or flashing for more than one minute after power-up or initiation of a selftest, a fault has been detected in one of the disc drives. (The fault light indication can be followed up by examining the selftest indicator LEDs on the rear of the instrument and consulting the "Selftest Results" section of the Appendix.)

The ON LINE indicator is on whenever the Winchester disc is accessed for data storage or retrieval, and momentarily when the drive is powered up.

The flexible disc access indicator is on whenever the flexible disc is accessed for data storage or retrieval and momentarily when the drive is powered up.

The selftest indicators for the flexible disc drive and the Winchester disc drive are visible through the DISC ADDRESS cut-outs on the rear panel and can be checked to determine which drive is defective if the FAULT indicator is on or flashing.

HP 9134XV Disc Memory

The HP 9134XV Disc Memory (Figure 4-3) is a random access data storage device. The disc memory contains a 5 1/4-inch Winchester disc drive configured as a single volume with a formatted capacity of 14.5Mbytes.

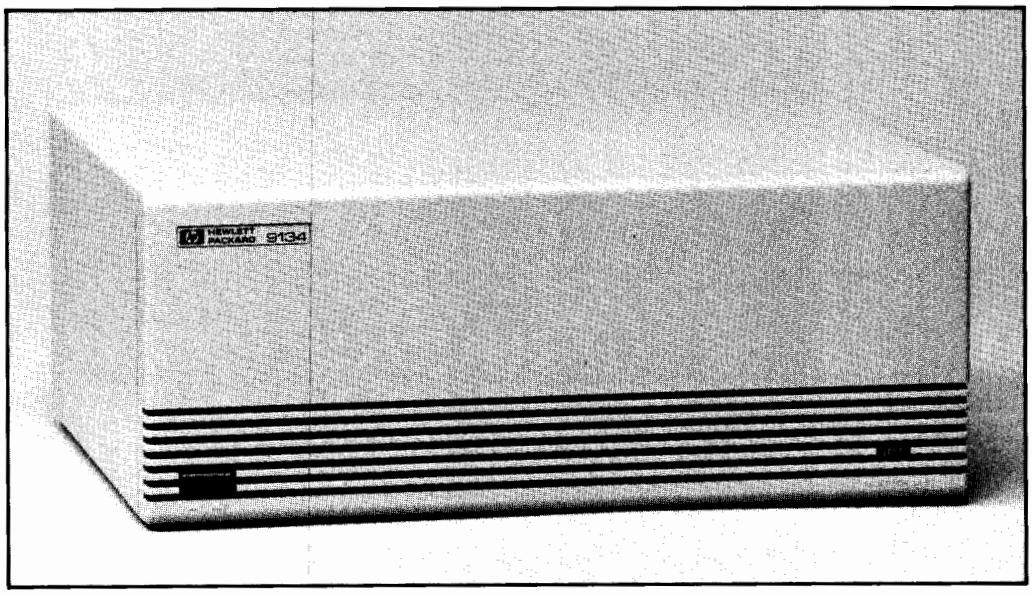

Figure 4-3. HP 9134XV Disc Memory

Technical Specifications

Listed below are the physical, electrical, and environmental specifications for the HP 9134XV disc memory.

Unit Specifications

Power Requirements:	
Source (selected by rear panel switch)	90 to 125Vac 180 to 250Vac
Line Frequency	48 to 66 Hz
Power Consumption(max)	125W
Environmental Range:	
Operating Temperature	10° to 40° C (50° to 104° F)
Storage Temperature	-40° to 60° C (-40° to 140° F)
Operating Humidity (non-condensing, 25° C max wet bulb temperature)	8% to 80%
Storage Humidity (non-condensing)	5% to 95%
Operating Altitude	0 to 4572m (0 to 15000 ft)
Storage Altitude	-304 to 1524m (-1000 to 50000 ft)
Size/Weight:	
Height	125mm (4.9 in)
Width	325mm (12.8 in)
Depth	285mm (11.2 in)
Net Weight	8.64kg (22 lb)
Shipping Weight	15.5kg (37 lb)

Drive Specifications

Characteristics	15 Mbyte Winchester 9134XV
Formatted Capacity:	
Bytes per Unit	14.5M
Bytes per Sector	256
Sectors per Track	31
Tracks per Surface	305
Surfaces per drive	6
Tracks per inch	345
Max Sustained	
Transfer Rate*	50KBytes/sec
Average Access Time	85msec
Rotational Speed	3600rpm

*Mainframe dependent

NOTE

There is no write protect capability on the Winchester drive. Caution must be used to avoid writing over data stored on the Winchester disc.

Controls and Indicators

The location of all controls and indicators on the disc memory are shown in Figure 4-4. Front panel controls and indicators are a primary power LINE switch, a FAULT indicator, and an ON LINE indicator. Rear panel controls and indicators are the FIXED DISC ADDRESS switch, the selftest indicator LED, and the VOLTAGE SELECT switch.

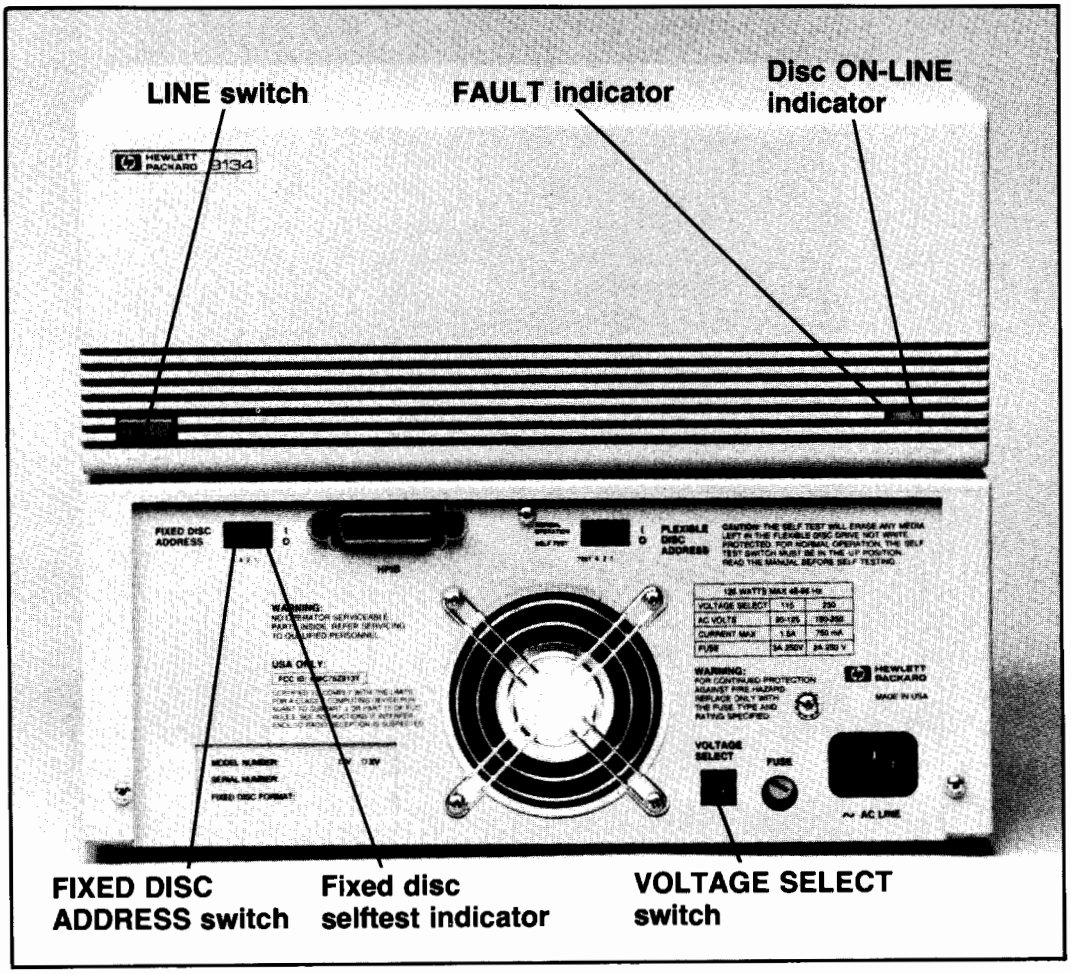

Figure 4-4. Controls and Indicators

The LINE switch controls the application of AC power to the disc memory. It is depressed to apply power, and depressed again to remove power.

The FAULT indicator is on whenever the selftest indicator is on. It is normally on during the power-up selftest, selftest initiated by a command from the computer, or when a fault exists in the Winchester disc drive. If the fault indicator remains on or flashing for more than one minute after power-up or initiation of a selftest, a fault has been detected in the disc drive. (The fault light indication can be followed up by consulting the "Selftest Results" section of the Appendix.)

The ON LINE indicator is on whenever the Winchester disc is accessed for data storage or retrieval, and momentarily when the drive is powered up.

The selftest indicator for the Winchester disc drive is visible through the device address cut-out on the rear panel. Its response is identical to that of the FAULT indicator.

Computer Museum

Chapter 5 Installation and Initial Checkout

- Introduction
- Equipment Supplied
- Configuring Power
- Interfacing to Your System
- Winchester Drive Operation

Introduction

This chapter contains procedures for the installation, initial power-on, and initial checkout of the HP 9134XV and initial power-on and checkout procedures for the Winchester drive in the HP 9133V/XV. For information on installation and initial checkout of the 3 1/2-inch drive in the HP 9133V/XV, see HP's 3 1/2-Inch Flexible Disc Drive Service Documentation, Part No. 09121-90030.

Equipment Supplied

Description	Quantity		HP Part Number
Power Cable	1		Dependent on location
User's Manual	1		09133-90010
Spare Fuse	1	90 to 125VAC	3 Amp 2110-0003
		or	
		180 to 250VAC	2 Amp 2110-0002

Configuring Power

Setting the VOLTAGE SELECT Switch

The VOLTAGE SELECT switch on the rear panel was set to the line voltage for the original destination when shipped from the factory. Verify that the setting is correct for local line voltage before connecting to the power source.

Figure 5-1 shows the setting of the VOLTAGE SELECT switch for the two ranges of line voltage.

WARNING
ALWAYS TURN OFF THE AC POWER SWITCH BEFORE CHANGING THE VOLTAGE SELECT SWITCHES.

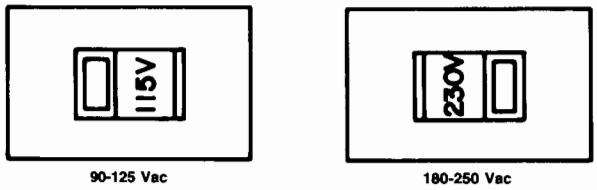

Figure 5-1. Line VOLTAGE SELECT Switch

Fuses

A different fuse is required for each voltage range (90-120VAC and 180-250VAC). The correct fuse for the original destination is installed and a spare fuse for that destination is included before shipment from the factory.

Table 5-1 gives the correct fuse ratings and fuse part numbers for each voltage range.

Table 5-1. Fuses

Switch Setting	Voltage Range	Fuse Rating	HP Part Number
115V	90-125VAC	3A 250 VAC Normal Blow	2110-0003
230V	180-250VAC	2A 250 VAC-Normal Blow	2110-0002

WARNING

ALWAYS DISCONNECT THE DISC MEMORY FROM THE AC SOURCE BEFORE CHANGING FUSES.

Power Cords

Power cords supplied by HP (See Figure 5-2) have polarities matched to the power input socket on the equipment. They are marked as follows:

L = Line or active conductor (also called "live" or "hot")

N = Neutral or identified conductor

E = Earth or safety ground

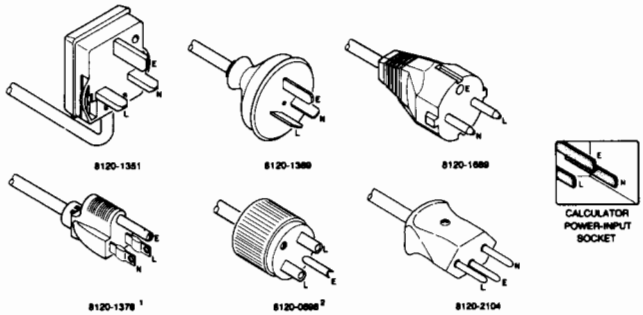

[1]UL and CSA approved for use in the United States of America and Canada with equipment set for either 100 or 120 Vac operation.

[2]UL and CSA approved for use in the United States of America and Canada with equipment set for either 200 or 240 Vac operation.

Figure 5-2. Available Power Cords

WARNING

IF IT IS NECESSARY TO REPLACE THE POWER CORD, THE REPLACEMENT CORD MUST HAVE THE SAME POLARITY AS THE ORIGINAL. OTHERWISE, A SAFETY HAZARD MIGHT EXIST SHOULD AN INTERNAL FAILURE OCCUR.

The correct power cord for the original destination is packaged with the equipment.

Interfacing to Your System

Selecting the Device Address

Before connecting the disc memory to the computer, and before powering-up, set the the device address.

Each device in an HP-IB system must be set to a unique device address. The two drives in an HP 9133V/XV are, for this purpose, considered separate devices; hence a device address switch is provided for each drive. See Figure 5-3 for switch locations.

A device address switch can be set to any one of eight device addresses ranging from decimal 0 through 7 by proper positioning of the four switch-segments within the device address switch. Table 5-2 lists the switch-segment positions for the eight device addresses.

Prior to setting the device address switches, turn the disc memory AC line switch OFF.

Table 5-2. Switch-Segment Positions

Address	*TEST	4	2	1	
0	**	DOWN	DOWN	DOWN	(Factory setting for Winchester)
1	**	DOWN	DOWN	UP	
2	**	DOWN	UP	DOWN	(Factory setting for flexible disc)
3	**	DOWN	UP	UP	
4	**	UP	DOWN	DOWN	
5	**	UP	DOWN	UP	
6	**	UP	UP	DOWN	
7	**	UP	UP	UP	

* Refer to "Selftest Results" in the Appendix for test information.
** The TEST switch-segment on the flexible disc device address switch must be UP for normal operation. The position of this switch-segment on the fixed disc device address switch does not affect operation.

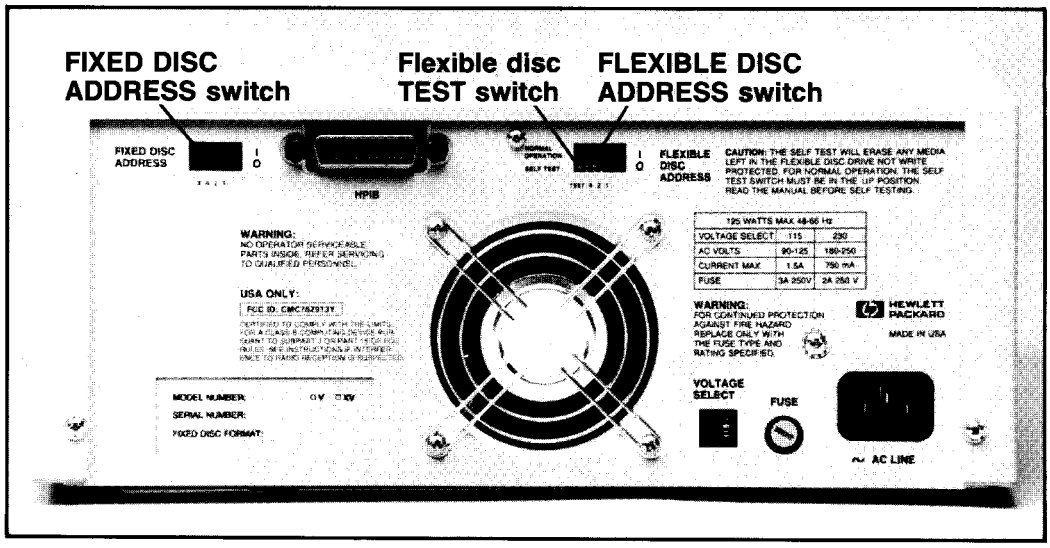

Figure 5-3. Device Address Switches

NOTE

If the TEST switch-segment on the flexible disc device address switch is in the down position, the computer will not be able to communicate with the disc drive and will probably indicate that the disc drive is not present.

HP-IB Cables

Refer to Figure 5-4 for a list of the HP-IB cables used with the computers.

Length	Accessory Number
1 metre	10833A
2 metres	10833B
4 metres	10833C
.5 metre	10833D

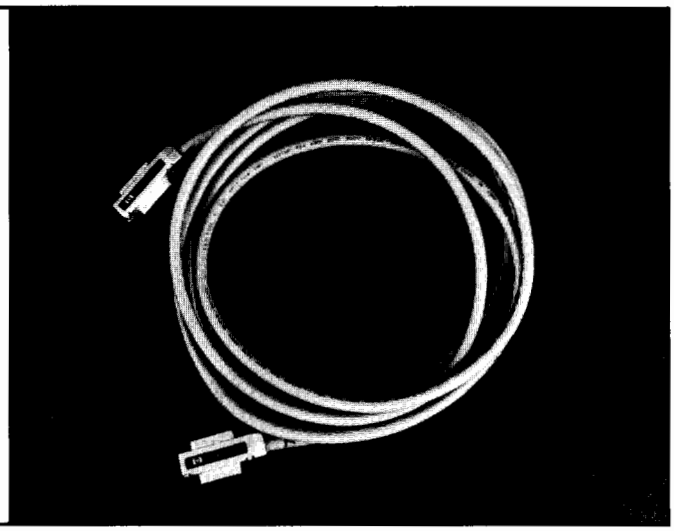

Figure 5-4. HP-IB Interface Cables

CAUTION

ALWAYS SET THE AC LINE SWITCHES TO "OFF" (0) FOR THE COMPUTER AND THE DISC DRIVES WHEN INSERTING OR REMOVING THE INTERFACE CABLES. USE ONLY CABLES DESIGNED BY HEWLETT-PACKARD FOR YOUR EQUIPMENT. FAILURE TO DO SO COULD DAMAGE THE DISC DRIVE OR THE CONTROLLING COMPUTER.

HP-IB Interface Restrictions

1. All the AC line switches must be turned "OFF" when connecting (and disconnecting) devices to your system.
2. The total length of cable permitted in one bus system must be less than or equal to two metres times the number of devices connected together (the interface card counts as one device; the 9133 counts as two devices.)
3. The total length of the cable must not exceed 20 metres. For example, a system containing six devices can be connected together with cables that have a total length less than or equal to 12 metres (six devices x 2m/device = 12 metres). The individual lengths of cable can be distributed in any manner desired as long as the total length does not exceed the allowed maximum.

4. The maximum number of devices that can be connected together in one bus system is 15.

   There are no restrictions to the way cables may be connected together; however, it is recommended that no more than four piggyback connectors be stacked together on one device. The resulting structure could exert enough force on the connector mounting to damage it.

Winchester Drive Operation

This section contains information about the initial power-on and initial checkout of the Winchester drive. Controls and indicators for the Winchester drive are discussed in Chapter 4.

NOTE

There is no write protect capability on the Winchester drive. Caution must be used to avoid writing over data stored on the Winchester disc.

Initial Power-on and Checkout

CAUTION

KEEP THE FRONT AND BACK OF THE DISC MEMORY FREE FROM OBSTRUCTIONS TO AVOID RESTRICTING THE AIR FLOW. FAILURE TO DO SO COULD CAUSE THE UNIT TO OVERHEAT AND RESULT IN DAMAGE TO THE DISC MEMORY.

Before turning the disc memory power on, check that the setting of the VOLTAGE SELECT switch on the rear panel (see above) is correct for local line voltage. If this is the first time the drive has been turned on, proceed as follows:

1. Connect the HP-IB cable from your computer to the disc memory.
2. Press the LINE switch on the front panel to the "1" position. The Power-on Selftest will automatically execute when power is applied. The FAULT indicator on the front panel will be continuously on during the test (about 30 seconds). Normally the indicator light will go off after completion of the test. Should it remain on or flashing, a fault has been detected. Refer to the "Selftest Results" section of the Appendix for further information on a selftest failure.
3. Consult computer system documentation for Winchester disc initialization procedure. The first time power is applied to a Winchester disc (or should damage to a disc be suspected), perform that initialization procedure.

   The first initialization of the four volume 5 MByte Winchester should immediately initialize all four volumes in the sequence of volume 0,1,2,3. (Later initializations do not require that the complete disc be initialized at the same time or in any particular sequence.)

With the Power-on Selftest successfully completed and the disc properly initialized, the Winchester drive is ready for operation.

GENERAL INFORMATION

CHAPTER

1

Introduction

Computer Museum

The HP 9134D Disc Memory (Figure 1-1) is a random access data storage device. The 9134D contains a single 5 1/4-inch Winchester drive providing 15 Mbytes of storage capacity.

The HP 9134D disc drive uses the SUBSET 80 command set.

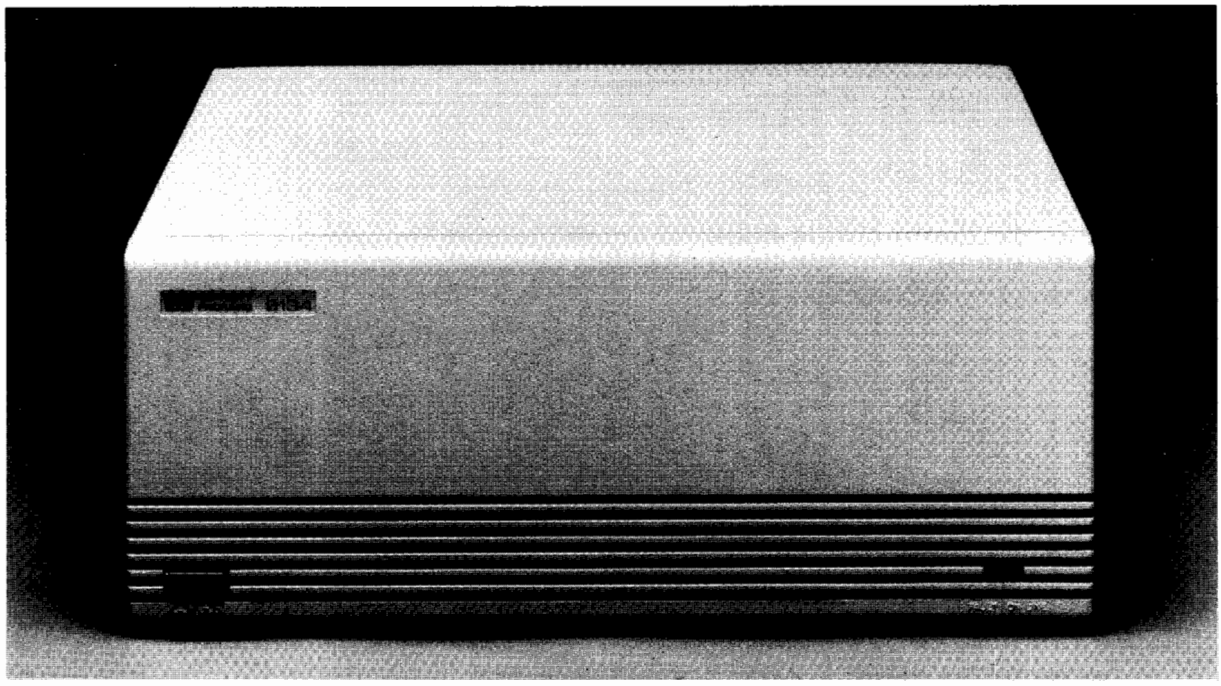

Figure 1-1. HP 9134D Disc Memory

Part Number 5957-6571

Date Printed 9/1/84

Technical Specifications

PERFORMANCE CHARACTERISTICS

	15 Mbyte Winchester Disc
Maximum Formatted Capacity:	
HP 150	
Bytes Per Unit	14.8M
Bytes per Sector	256
Sectors per Track	32
Series 200 (BASIC and Pascal)	
Bytes Per Unit	14.8M
Bytes Per Sector	256
Sectors per Track	32
Series 200 (HPUX)	
Bytes Per Unit	16.6M
Bytes Per Sector	1024
Sectors per Track	9
Tracks per Surface	303
Surfaces per disc	2 (3 platters)
Tracks per inch	345
Recording Format	MFM
Max Sustained Transfer Rate*	145 Kbytes/sec
Average Access Time	85 msec
Maximum Access Time	205 msecs
Rotational Speed	3600 rpm

* Mainframe and interleave dependent.

ENVIRONMENTAL RANGES

	9134D	9133D
Temperature		
Operating	10 to 40 degrees C (50 to 104 degrees F)	
Non-Operating	-40 to 60 degrees C (-40 to 140 degrees F)	
Humidity		
Operating (non-condensing) 26 degrees C max wet bulb temperature	8% to 80%	20% to 80%
Non-Operating (non-condensing)	5% to 95%	
Altitude		
Operating	0 to 4572m (0 to 15000 ft)	
Non-Operating	-304 to 1524m (-1000 to 50000 ft)	

PHYSICAL CHARACTERISTICS

		9133D
Size		
Height	125 mm (4.9 in)	
Width	325 mm (12.8 in)	
Depth	285 mm (11.2 in)	
Weight		
Net	8.64 kg (19 lbs)	10kg (22.0 lbs)
Shipping	15.5 kg (34 lbs	16.8kg (37.0 lbs)

POWER REQUIREMENTS

Voltage (selected by rear panel switch)	86-127VAC 195-253VAC
Frequency	48-66Hz
Power	125W

Equipment Supplied

The following equipment is supplied with each HP 9134D disc memory.

Description	Quantity	HP Part Number
AC Power Cord	1	Dependent on location
Operator's Manual	1	09133-90040

CAUTION

The DISC MEMORY is a precision instrument. Mechanical shock can misalign the READ/WRITE HEAD, resulting in READ ERRORS and/or DAMAGED DISCS whether the disc is operating or not.

Cleaning the Case

Refer to the operators manual supplied with the unit for complete instructions on cleaning procedures.

CAUTION

Chemical spray-on cleaners used for appliances and other household and industrial applications may damage the case finish. Do not use detergents that contain ammonia, benzenes, chlorides, or abrasives.

Installation

CHAPTER 2

Introduction

Refer to Installation chapter of the 9133/34 V and XV section of this manual for Installation information. Following is additional information which applies to the HP 9133/34D.

Controls and Indicators

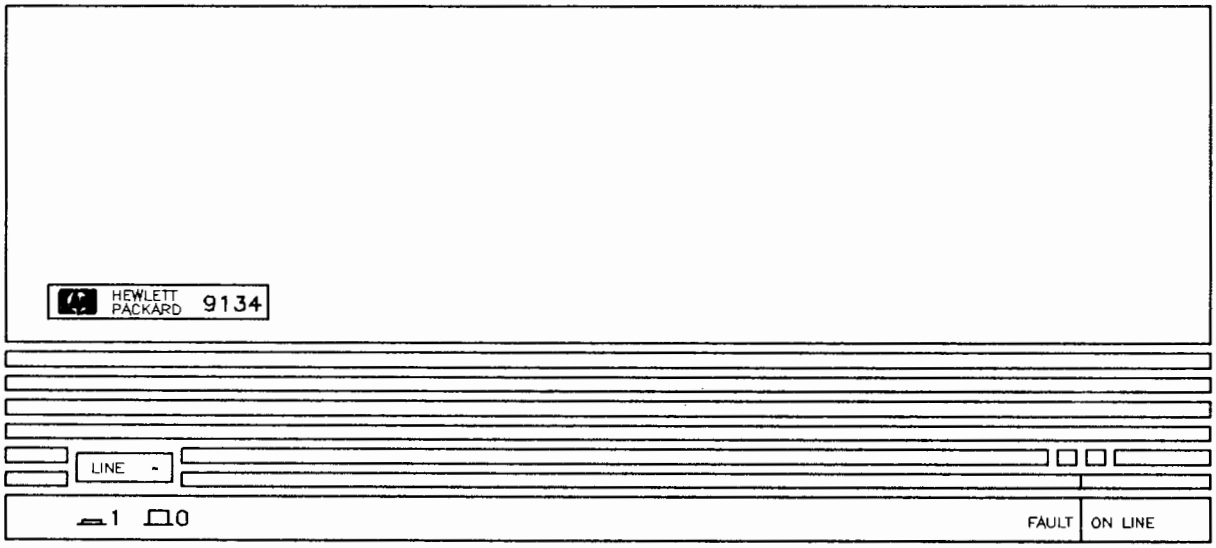

Figure 2-1

Figure 2-1 above shows the controls and indicators available on the front pannel of the HP 9133/34D.

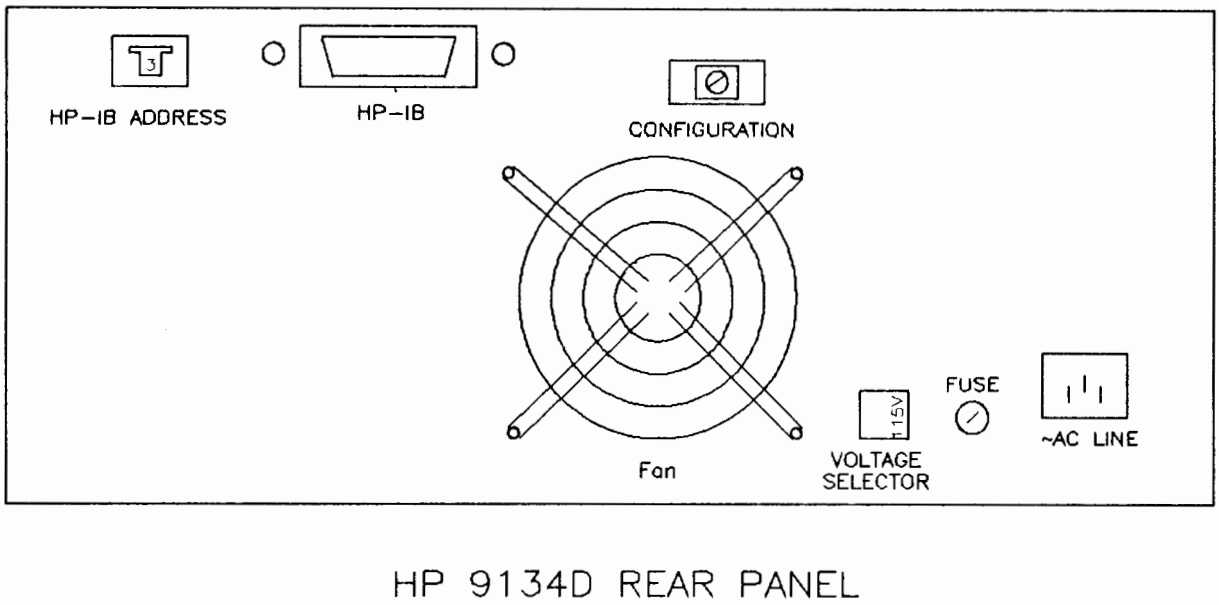

Figure 2-2

Volume Configuration

The HP 9133/34D hard disc can be divided into multiple volumes of various sizes. Multiple volumes are available only on Series 200 computers. The followi ng chart shows the selections available. Refer to figure 2-2 for location of the volume configuration switch.

Configuration Setting	Number of Volumes	Size of Volumes	
		256 bytes/sector	1024 bytes/sector
0	One	14.84 Mbyte/volume	16.64 Mbyte/volume
1	One	14.84 Mbyte/volume	16.64 Mbyte/volume
2	Two	7.37 Mbyte/volume	8.23 Mbyte/volume
3	Three	4.91 Mbyte/volume	5.47 Mbyte/volume
4	Four	3.64 Mbyte/volume	4.03 Mbyte/volume
5	One	12.29 Mbyte/volume	13.76 Mbyte/volume
	One	2.51 Mbyte/volume	2.76 Mbyte/volume
6	Six	2.41 Mbyte/volume	2.65 Mbyte/volume
7	One	9.83 Mbyte/volume	11.00 Mbyte/volume
	Two	2.46 Mbyte/volume	2.70 Mbyte/volume
8	Eight	1.77 Mbyte/volume	1.93 Mbyte/volume

9	One	7.32 Mbyte/volume	8.18 Mbyte/volume
	Three	2.46 Mbyte/volume	2.70 Mbyte/volume

Fuses

The AC line fuse used in the 9133/34D is for both 115 and 230 Vac.

Interface Information

CHAPTER 3

Introduction

Refer to the HP 9133/34 V and XV section of this manual for interface information on the HP 9134D. Following is information which applies to the HP 9134D.

Setting the HP-IB Address

Figure 3-1 shows the location of the HP-IB address switch. This is a thumbwheel switch with numbers 0 through 9. To select the proper address, turn the thumbwheel untill the number you want appears in the window.

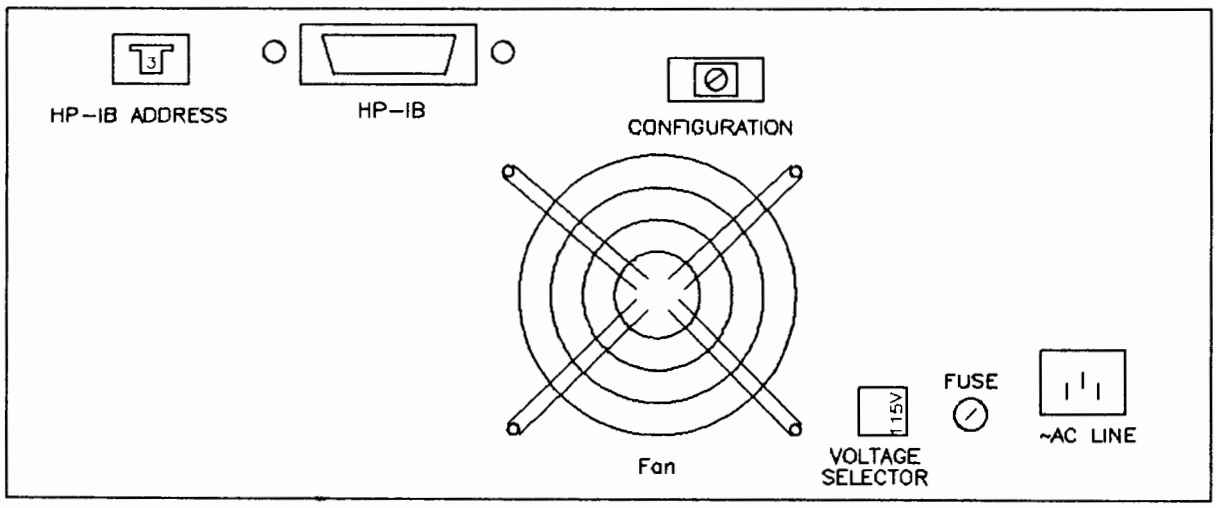

HP 9134D REAR PANEL

Figure 3-1

Troubleshooting

CHAPTER 4

Repair Philosophy

The 5 1/4-inch Winchester disc drive assembly is serviced on the exchange program. This includes the drive, the drive electronics PCA, and the Drive Controller PCA.

The selftest procedures are given to enable you to isolate problems in the field.

Controller assembly detailed information is not presented.

Exchange Assemblies

Computer Museum

PART NUMBER	DESCRIPTION
15 Mbyte Winchester	-- 09133-69104
Winchester Drive Electronics	-- 09133-69105
Controller Board	-- 09133-69510

Non-Exchange Assemblies

Fan Assembly	-- 09133-68501
Winchester Disc Ctlr Cable	-- 09133-61623
Winchester Disc R/W Cable	-- 09133-61624
Power Supply	-- 09133-67110
Fuse 3A 250V	-- 2110-0003

Field Service Inventory

The following list of assemblies and parts is recommended in addition to the Field Service Inventory (FSI) which currently exists for the HP 9114A, 9122D/S and the 9133/34XV products.

Controller Board	-- 09133-69510
Winchester Disc Ctlr Cable	-- 09133-61623
Winchester Disc R/W Cable	-- 09133-61624
Power Supply	-- 09133-67110

Drive Controller and Power Supply Assemblies

Figure 4-1 shows the test-points, adjustments, jumpers, and key components on the Drive Control PCA.

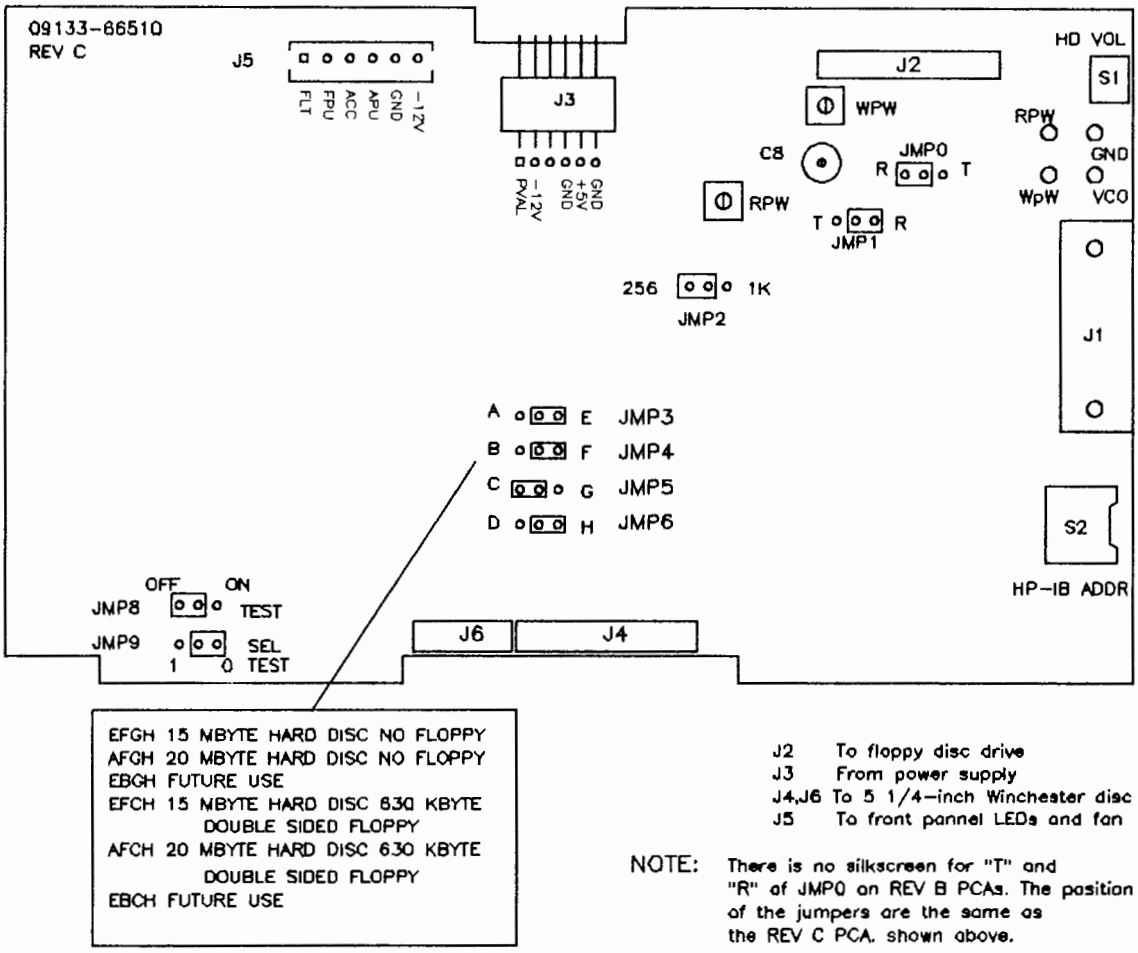

Figure 4-1

Selftest

Selftest routines can be initiated in 3 different ways and test the 2 different portions of the controller board (3 1/2-inch drive and the 5 1/4-inch Winchester drive). Selftest, are initiated as follows:

1. At power-on a selftest of the processor, ROM, HP-IB chip, microprocessor RAM, buffer RAM, and both drives is performed. The hard disc test includes reading and writing sectors, comparing each byte written, seeking back and forth from track 0 to the maximum track, checking the spindle speed, and checking that the ECC chip functions correctly by introducing errors and correcting them.

2. With a host, the Initiate Diagnostic command can be given which runs a test similar to those at power on.

   A switch and/or jumper can be set which causes the HP 9134D to go into the diagnostic test mode. It interprets the 4 bit HP-IB switch as a selftest to perform. The LED is blinked (to show that it works) and then the test, as selected by the address switch setting, is performed. A successful test is indicated by the LED blinking. A failure causes the LED to stay on. The test results are displayed for 5 seconds. If the test jumper (JMP8) is left on (0), the same test will be performed again. When the service test jumper is no longer in the diagnostic test position, the HP 9134D will go through the power-up sequence and will again be in the peripheral mode of operation, waiting for commands over HP-IB.

The following table illustrates how to select the desired test using the HP-IB address switch and the SELECT TEST jumper (JMP9).

TABLE 1

HB-IB ADDRESS SW	SELECT TEST JUMPER	SELECTED TEST
0	0	0
1	0	1
2	0	2
3	0	3
4	0	4
5	0	5
6	0	6
7	0	7
0	1	8
1	1	9
2	1	10
3	1	11
4	1	12
5	1	13
6	1	14
7	1	15

The SELFTEST capability of the HP 9134D consists of being able to select and optionally loop on any one selected test from the following choices:

NOTE: Since the RAM test will clear all parameters, some of which are needed for other tests, you can't switch arbitrarily from test to test. The best sequence is as follows:

1. Turn off power.

2. Select the RAM test using TABLE 1 to set the switches correctly. (Refer to FIGURE 4-1 for jumper locations.)

3. Turn on power. Device will do all or part of power on selftest and will then start doing the RAM test. When the test is completed, the selftest LED should blink 5 times. If it doesn't, the test failed.

4. Turn power off. Select next test.

5. Turn on power. Device will do all or part of the power on selftest and will then start doing the test specified. When the test is completed, the selftest LED should blink 5 times. If it doesn't, the test failed.

6. Now select the next test you want. You can test anything but the RAM test. There is a 4-second wait between tests to "debounce" while you are changing the switches. When the test is completed, the selftest LED should blink 5 times. It it doesn't, the test failed.

7. You can do step 6 over and over until all tests are performed except the microprocessor RAM test.

LED FUNCTIONING

Start	1. LED ON 4 seconds	-will stay here until test selection
	2. LED OFF .5 seconds	-is the same for 4 seconds.
	3. LED ON during test	-test in progress

TEST PASSES	TEST FAILS
4. LED ON/OFF 5 times (.5 seconds each).	4. LED stays ON.
5. Go to start.	5. Go to start.

The results of a successful test are displayed by the FAULT-LED blinking. A failure causes the LED to stay on. Results are displayed for five seconds followed by a complete power-up sequence.

Available Test

0	RAM	All possible patterns are written in all locations of both RAMS.
1	ROM	A checksum calculation is performed.
2	HP-IB	Two of the registers on the HP-IB chip are written and their contents verified.
3	FDC chip	Two of the registers on the FDC chip are written and their contents verified.
4	Floppy Seek	Commands are given to the FDC to move the head on and off track 0. The track 0 indicator is checked to see that movement occurred.
5	Winchester Seek	Commands are given to the WD1010 to restore to cylinder 0 and then step off of cylinder 0. The track 0 indicator is checked to see that it works.
6	Floppy Speed	The head is stepped to track 35 and loaded. The period of the index pulse is measured and compared against the specification. No test is performed if there is no medium in the drive.
7	Winchester Speed	The spindle speed of the drive is checked and compared with the allowed range.
8	Floppy Write/Verify	Every sector on the disc is written and the data is verified. All user data on the medium is lost.
9	Winchester Write/Verify	All sectors on the selftest cylinder are written and read. Each byte including the ECC is checked. Error correction is also checked. No user data is affected.
10	Floppy Verify	All sectors in the data area of the disc are checked for CRC errors. No user data is affected.
11	Winchester Verify	All sectors in the data area of the disc are checked for CRC errors. No user data is changed.
12	Floppy Format	The disc is re-initialized with a 011 data pattern.
13	WD1010 Check	All read/write registers on the WD1010 are checked.

14	WD1100 Check	Writes data pattern to all registers with all combinations and verifies the data.
15	WD1100 Data Buffer RAM Test	Test the WD data buffer RAM

Additional Hints

At power on, if the unit does not respond to commands, the fault LED can be used to locate a failing section of the PCA. The LED will respond in one of the following ways:

- LED on solidly	6809 is bad
- LED blinks off once every 6 seconds	ROM checksum is wrong
- LED blinks off 2 times/6 seconds	Processor ram is bad
- LED blinks off 3 times/6 seconds	Buffer ram is bad
- LED blinks off 4 times/6 seconds	Configuration jumpers A-H set wrong
- LED blinks off 5 times/6 seconds	8291 is bad

Assembly Access

CHAPTER 5

Introduction

Refer to the 9133/34 V and XV section of this manual for Assembly Access information.

The following is additional information which pertains to the HP 9133/34D.

Controller PCA Removal

To remove the controller board proceed as follows: (The procedure below assumes that you are facing the front of the unit.)

1. Detach cables J2 thru J6.
2. Remove the 3 mounting screws from the left side of the board.
3. Remove the HP-IB connector nuts from the rear of the chassis.
4. Lift the board clear of the chassis.
5. During reassembly, note that the board slides into lanced board guides on the right side of the chassis.

9133/34D PARTS LIST

LEVEL	REFERENCE DESIGNATOR	PART NUMBER	DESCRIPTION
1	A1	09133-69510	FLPY/HRD DISC BD
.2	C8	0121-0552	C-V 7-60PF VAC
.2	C1-7,10-22,25,26, C28-30	0160-4571	C-F .1UF + 80
.2	C31	0160-4803	C-F 68PF 5% 100V
.2	C32	0160-4807	C-F 33PF 5%100V
.2	C37	0160-4809	C-F 390PF 5%
.2	C35,36	0160-4832	C-F .01UF 10%
.2	C38	0160-4833	C-F .022UF 10%
.2	C9,23	0160-4835	C-F .1UF 10% 50V
.2	C39	0160-5861	C-F 100 PF 1%
.2	C24	0180-0291	C-F 1UF 35V 10%
.2	C27	0180-1746	C-F 15UF 20V
.2	R14	0683-1015	R-F 100 OHM .05
.2	R13,15,16	0683-1035	R-F 10K .05 1/4W
.2	R5,6,7,22	0683-3615	R-F 360 OHM .5

.2	R9	0683-4725	R-F 4.7K .05
.2	R8	0698-3438	R-F 147 1% .125W
.2	R21,23	0698-3700	R-F .125W 715 1%
.2	R18	0757-0161	R-F 604 OHM 1%
.2	R17	0757-0274	R-F 1.21K 1%
.2	R1,3,20	0757-0280	R-F 1K 1% .125W
.2	R19	0757-0400	R-F 90.9OHM .01
.2	R11,12	0757-0437	R-F 4.75K 1%
.2	U9	09133-89102	PROM-1
.2	U13	09133-89202	PROM-2
.2	U29	1200-0817	SOCKET 40 PIN
.2	U9,13	1200-0861	SKT-IC 28-CONT
.2	J1	1251-7651	CN24 M AMP CHAMP
.2	J5	1251-8089	CN 6.100 ST HDR
.2	J6	1251-8681	20 PIN CONNECTOR
.2	J2	1251-8682	CN 26.1 SQ POST
.2	J4	1251-8683	CONNECTOR,34 PIN
.2	JMP1-JMP9	1252-0058	CN3.1 SQ POST
.2	JMP1-JMP9	1258-0141	JUMPER-REM
.2	RP1	1810-0083	NTWK-R 13X1K DIP
.2	RP3	1810-0182	NTWK-R24XMULTDIP
.2	RP2	1810-0235	NTWK-R15X2.2KDIP
.2	RP4	1810-0286	NTWK-R 15X10KDIP
.2	U57	1813-0067	XTAL-CLK-OSC
.2	U11	1813-0194	XTAL-CLK-OSC
.2	U55	1813-0346	DLAY LINE 60NSEC
.2	U4,17	1818-1611	IC-STATIC RAM
.2	U5	1820-0471	IC-SN7406N
.2	U37,58,59	1820-0621	TTL BUFF 7438N
.2	U63	1820-0693	IC SN74S74
.2	U19,23,49,53	1820-1112	IC SN74LS74AN
.2	U47,51	1820-1144	IC-74LS02
.2	U46	1820-1196	IC-SN74LS174N
.2	U21,26,35,50	1820-1197	IC SN74LS00N
.2	U27,39	1820-1199	IC-74LS04
.2	U31,32,44	1820-1201	IC-SN74LS08N
.2	U54	1820-1202	IC-74LS10N
.2	U24,43,25,34,45,48	1820-1208	IC-74LS32
.2	U38	1820-1216	IC-SN74LS138
.2	U18	1820-1281	IC SN74LS139N
.2	U56	1820-1285	IC SN74LS54N
.2	U1,40	1820-1416	IC SN74LS14N
.2	U20,22	1820-1433	IC SN74LS164N
.2	U28	1820-1568	IC SN74LS125AN
.2	U30,41	1820-1730	IC SN74LS273N
.2	U61	1820-1782	IC 26S02
.2	U7,33,42	1820-2024	IC-SN74LS244
.2	U8	1820-2075	1C SN74LS245N
.2	U15,16	1820-2096	IC SN74LS393N
.2	U62	1820-2203	IC AM26LS32PC
.2	U14	1820-2536	IC SN74LS352N
.2	U6	1820-2549	IC-8291AP
.2	U12	1820-2624	IC-68B09

.2	U64	1820-2749	IC AM26LS31PC
.2	U29	1820-3168	IC WD1010
.2	U52	1820-3318	IC SN74ALS273N
.2	U2	1820-3431	IC DS75160AN
.2	U3	1820-3513	IC DS75161AN
.2	U10	1820-3659	WD-2793-02 FDC
.2	U60	1820-3705	NAT'L DP8460N-4
.2	CR1	1901-0050	DIO SWITCHING
.2	R2,4	2100-3210	RES-TRMR 10K 1%
.2	R10	2100-3874	RES-VAR 5K 10%
.2		2200-0107	SCR-MACH 4-40
.2	S1	3100-1662	SW-RTRY 10 POS
.2	S2	3100-1951	SW-THUMBWHEEL-10
1		09133-68501	FAN ASSY
1		09133-90040	OPRS MNL 34D,33D
1		09144-45404	GUARD, POWER
1		1450-0625	LED HOLDER
1		2190-0843	WASHER
1		2360-0113	SCR-MACH 6-32
1		3050-0010	WSHR-FL MTLC
1		5041-1203	PWR BUTTON WHITE

FUSES

1		2110-0003	FUSE-3AMPS NB

MECHANICAL PARTS

1		09133-61623	DISC CTLR CABLE
1		09133-61624	DISC R/W CABLE
1		8120-1378	CABLE-POWER

CASE PARTS

1		0403-0427	BUMPER FOOT
1		0515-0353	M3X.5X10MM
1		0515-0825	SCR M4X.7 X8MM
1		0515-1079	SCREW-MACHINE
1		0515-1085	SCREW-MACHINE
1		0624-0458	SCR-TPG 8-16

1	0624-0525	SCR-TPG 10-14
1	07940-00026	FAN GUARD
1	09121-48303	FOOT-MOLDED
1	09133-00602	FRT SHIELD-33
1	09133-01201	BRKT,FLPY
1	09133-01202	WIN. BRKT
1	09133-09100	SPRING-RETAINER
1	09133-20101	CHASSIS - 9133
1	09133-40201	FRT PNL- 9133
1	09133-40202	SWITCH SHAFT
1	09133-42501	LIGHT PIPE
1	09133-61606	LED/PWR CABLE
1	09133-61621	PWR HARNESS

EXCHANGE ASSEMBLIES

09133-69104	15-Mbyte Winchester
09133-69105	Winch. Drive Elec.
09133-69510	Controller Board

NON-EXCHANGE ASSEMBLIES

09133-68501	Fan Assembly
09133-61623	Disc Cntlr Cable
09133-61624	Disc R/W Cable
09133-67110	Power Supply
09133-08866	Top Cover/Shield Assembly
2110-0003	Fuse 3A 250V

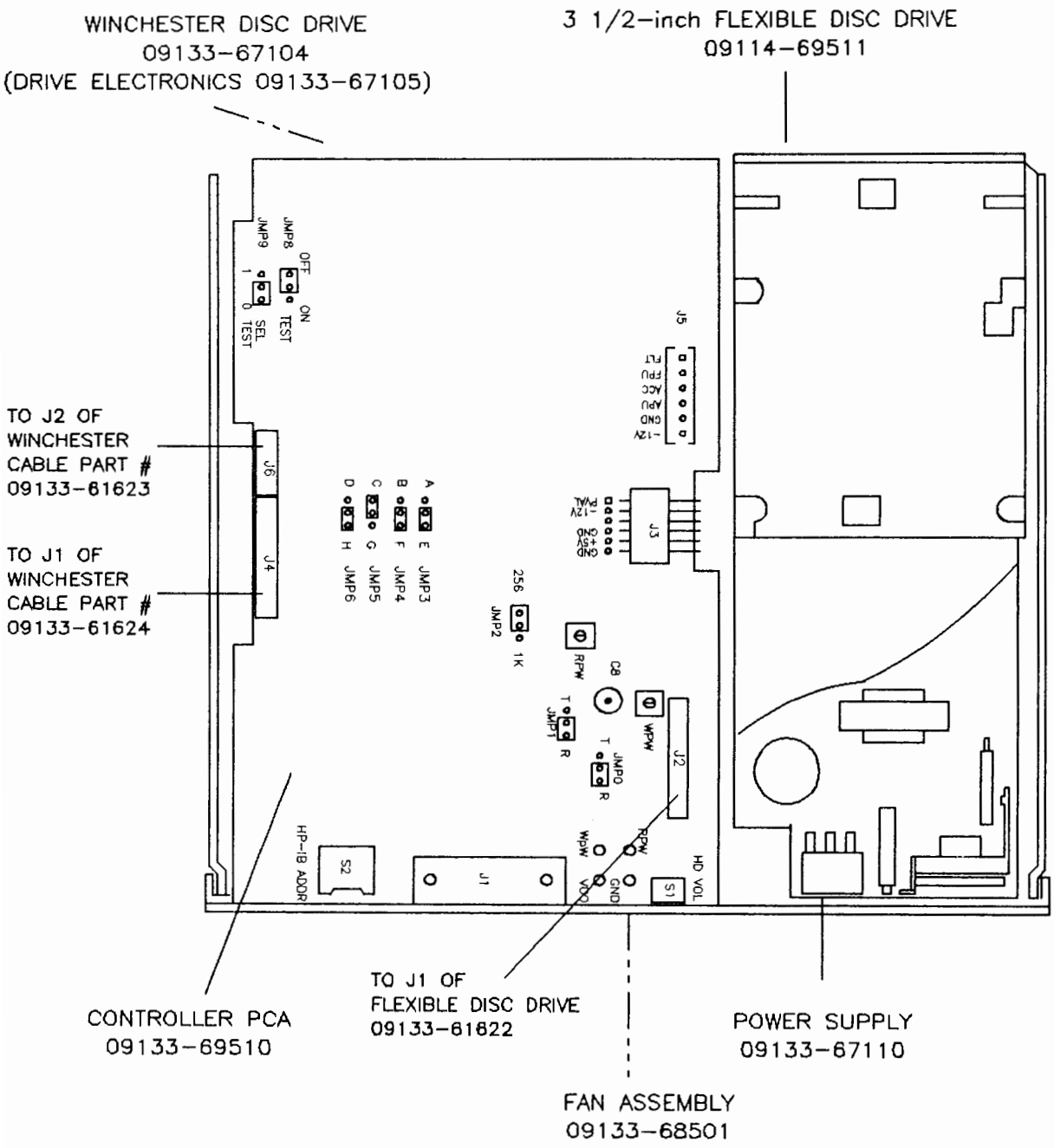

Location of Field Replaceable Assemblies (FRA)

Computer Museum

Appendix

Introduction

This document contains the firmware description for the 09133-69514 controller. This is the HP-designed controller assembly for the Winchester drives. The 09133-69514 controller is a replacement for several controllers which have been designed by HP OEMs for the 5 Mbyte drives. The new controller appears with the newer 5 Mbyte single drive units. See Table 1-1 "Product Configuration" in Chapter 1 of Section 2.

This description is divided into four major sections. The first describes the various configurations in which the 09133-69514 controller can operate. The 09133-69514 controller has several jumper-selectable configurations which select drives of various capacities (physical configuration), and also select the apparent format of the drive (logical configuration).

The remaining three sections describe various aspects of the command set. The "Status" section describes all of the status information available to the host and includes tables of error codes. The "Command Set" section describes the protocol used in general terms. Finally, the "Command Descriptions" section gives the details about each command individually.

Information on the MSC controllers (88134-69910, 09135-69515, and the 09135-69501) plus selftests is presented at the end of this Appendix.

Information about the 09133-69508 controller which is used in the 9133V/XV and the 9134XV disc memories is on page A-59.

Configurations

The various configurations of the 09133-69514 controller have both a physical and a logical aspect. The physical part of a configuration specifies the type of drive being controlled, and the logical part describes the way that drive is made to appear to the host.

The various logical and physical options are described in the following sections. Next, a chart summarizes the differences between the configurations. When a command description mentions the "maximum physical cylinder," for example, the actual cylinder number depends on the configuration and is defined in the chart. Finally, the address transformations required by some configurations are described.

Logical Configurations: Single and 4-Volume

Each of the logical configurations is either a 4-Volume or an Single-Volume. The two types are very similar, differing primarily in the way logical units are related to physical drives.

The 4-Volume configurations cause a 5 Mbyte drive to appear, to the host, as a four-unit 9895A flexible disc. One physical drive is addressed as if it were four separate (and smaller) drives. The physical cylinder, sector, and head numbering of the drive being used are mapped into the cylinder, sector, and head numbering that the host would expect to see for each 9895A unit. The controller also identifies itself to the host as a 9895A. This logical format allows hosts with existing 9895A drivers to use the Winchester drives without investing any time in writing new drivers. The 4-Volume is applicable only to 5 Mbyte drives since that is the capacity of a four-unit 9895A.

The Single-Volume configuration is similar to the 4-Volume in that they also use the 9895A Amigo protocol. With the Single-Volume, however, a drive does not appear to the host to be indentical to the 9895A. One physical drive becomes one logical unit, with cylinder, sector, and head numbering corresponding (usually) to the physical organization of the drive. This logical format allows 9895A drivers to be easily modified to use the Single-Volume configuration, and allows drives of larger capacities to be used.

Physical Configuration: Drives Supported

Two Winchester disc drives are supported by the various 09133-69514 controller configurations. These are the 5 Mbyte Single Platter and the 10 Mbyte Dual Platter.

The major differences between these drives are the capacities and the number of platters. These differences account for most of the complications in supporting the different configurations. Other differences must also be accounted for, including maximum step rate and the cylinder at which write pre-compensation (pre-comp) begins.

The following chart details some of the differences between the drives.

	5 Mbyte Single Platter	10 Mbyte Dual Platter
Capacity (MB)	5	10
Cylinders	306	306
Platters	1	2
Heads	2	4

Only certain combinations of logical format and physical drive are possible. The following chart marks these pairs with an X.

Physical -	5 Mbyte Single Platter	10 Mbyte Dual Platter
Logical – 4-Volume	X	–
Single-Volume	X	–
Single-Volume	–	X

Each of these possible configurations is described in the following sections.

Configuration Summary

The chart on the following page summarizes the differences between the various configurations.

NOTE

"Unit" refers to a logical unit, and "drive" refers to the physical disc drive. "Units per drive" is therefore the number of logically-addressed units on a single-disc drive.

The last physical cylinder is used to perform a write/read selftest, which would destroy any user data on that cylinder. For this reason, commands that read or write are not allowed to access the last physical cylinder (selftest cylinder) so that no user data can be written there. The cylinder range allowed for reads and writes is given in the table as "logical read/write cylinders." The full range of logical cylinders is available to other commands such as Format and Initialize.

	5 Mbyte Single Platter	5 Mbyte Single Platter	10 Mbyte Dual Platter
Identify bytes	00H, 81H	01H, 06H	01H, 0AH
Max. number of drives supported	1	1	1
Units per drive	4	1	1
Physical cylinders per drive	0 to 305	0 to 305	0 to 305
Logical cylinders per unit	0 to 76	0 to 152	0 to 305
Logical read/write cylinders per unit	0 to 75	0 to 151	0 to 304
Selftest cylinder, logical (each unit)	76	152	305
Selftest cylinder, physical	305	304 &305	305
Physical heads	2	2	4
Logical heads	2	4	4
Physical sectors per track	32	32	32
Spare sectors per track	2	1	1
Usable sectors per track	30	31	31
Address mapping required?	yes	yes	no

Address Transformations

The host addresses a particular sector with a unit number, a cylinder number, a head number, and a sector number. This logical address for a sector is identical to the physical address only for configurations in which each disc drive corresponds to a single logical unit, and in which the logical and physical ranges for cylinder, head, and sector numbers are the same.

For the three possible configurations, however, the logical and physical appearances are different, and a logical address from the host must be transformed into a physical address before a sector is accessed. These configurations are the 4-Volume, in which a single drive becomes four logical units, and the Single-Volume configuration.

The address transformations for each of these configurations are given on the following pages.

Single Platter Address Transformations

The 5 Mbyte Single Platter hard disc used in the 4-Volume configuration has 306 cylinders, 2 heads, and 32 sectors per track. It is made to appear to be a 9895A which has four units, each having 77 cylinders, 2 heads, and 30 sectors per track. A command to access a unit, cylinder, head, and sector of the (logical) 9895A is mapped into a cylinder, head, and sector of the (physical) 5 Mbyte Single Platter drive.

Note, for each unit, the 9895A cylinder number 76 maps into the last physical cylinder of the drive (305 on the 5 Mbyte Single Platter.) These cylinders are used for the write/read selftest, and the host is prevented from using them for data.

The following formulas map logical 9895A addresses into physical addresses.

Cylinder:

5 Mbyte Single Platter cylinder = 76*(unit number) + (9895A cylinder).

Head:

5 Mbyte Single Platter head = 9895A head.

Sector:

No transformation is required for sector numbers.

The following table shows this mapping.

	Logical (9895A)		PHYSICAL (5 Mbyte Dual Platter)		PHYSICAL (5 Mbyte Single Platter)	
UNIT	HEAD	CYLINDER	HEAD	CYLINDER	HEAD	CYLINDER
0	0	0	0	0	0	0
0	1	0	1	0	1	0
	0	1	2	0	0	1
0	1	1	3	0	1	1
...	...	...	...	...	...	...
0	0	74	0	37	0	74
0	1	74	1	37	1	74
0	0	75	2	37	0	75
0	1	75	3	37	1	75
0	0	76	0	152	0	305
0	1	76	1	152	1	305
1	0	0	0	38	0	76
1	1	0	1	38	1	76
1	0	1	2	38	0	77
1	1	1	3	38	1	77
...	...	...	...	...	...	...
1	0	74	0	75	0	150
1	1	74	1	75	1	150
1	0	75	2	75	0	151
1	1	75	3	75	1	151
1	0	76	2	152	0	305
1	1	76	3	152	1	305
2	0	0	0	76	0	152
2	1	0	1	76	1	152
2	0	1	2	76	0	153
2	1	1	3	76	1	153
...	...	...	...	...	...	...
2	0	74	0	113	0	226
2	1	74	1	113	1	226
2	0	75	2	113	0	227
2	1	75	3	113	1	227
2	0	76	0	152	0	305
2	1	76	1	152	1	305
3	0	0	0	114	0	228
3	1	0	1	114	1	228
3	0	1	2	114	0	229
3	1	1	3	114	1	229
...	...	...	...	...	...	...
3	0	74	0	151	0	302
3	1	74	1	151	1	302
3	0	75	2	151	0	303
3	1	75	3	151	1	303
3	0	76	2	152	0	305
3	1	76	3	152	1	305

Single-Volume Single Platter Address Transformation

The Single-Volume Single Platter configuration is logically equivalent to the Single-Volume Dual Platter configuration. The Dual Platter configuration uses identical logical and pysical addresses. Since the Single Platter must use the same logical addressing scheme as the Dual Platter, but has a different physical configuration, logical addresses must be mapped into physical addresses. The host driver uses the cylinder and head numbers for the 5-Mbyte Dual Platter and

troller maps them into the cylinder and head numbers of the 5 Mbyte Single Platter. The 5 Mbyte Dual Platter has 153 cylinders and 4 heads, and the 5 Mbyte Single Platter has 30 cylinders and 2 heads. The following shows the mapping used:

LOGICAL (5 Mbyte Dual Platter)		PHYSICAL (5 Mbyte Single Platter)	
HEAD	CYLINDER	HEAD	CYLINDER
0	0	0	0
1	0	1	0
2	0	0	1
3	0	1	1
0	1	0	2
1	1	1	2
2	1	0	3
3	1	1	3
0	2	0	4
1	2	1	4
...	...	...	...
0	151	0	302
1	151	1	302
2	151	0	303
3	151	1	303
0	152	0	304
1	152	1	304
2	152	0	305
3	152	1	305

The formulas for this transformation are:

5 Mbyte Single Platter cylinder = 2*(5 Mbyte Dual Platter cylinder) if (5 Mbyte Dual Platter) head = 0 or 1

= 2*(5 Mbyte Dual Platter cylinder) = 1 if 5 Mbyte Dual Platter head =2 or 3

5 Mbyte Single Platter head = 0 if 5 Mbyte Dual Platter head is 0 or 2

= 1 if 5 Mbyte Dual Platter head is 1 or 3.

Status

The status information that the controller can return consists of two status words (Stat 1 and Stat 2), the DSJ byte, the selftest results and the target addresses. Stat 1 contains information about the last operation performed, and Stat 2 gives the status of the unit given as a parameter to the Request Status command. DSJ is an indication of controller status. The selftest results describe the results of the last selftest, contain diagnostic information, or describe the most recent hardware failure. The target addresses are not usually part of error reporting, but are included because they are information available to the host. Each of these is described in the following pages. Also, a "Power-On State" section describes the initialization of status at power-on or after a Initiate Selftest command.

STAT 1

The Stat 1 and Stat 2 words are returned in response to the Request Status and Send Status command sequence. Stat 1 gives information about the last command received, and consists of the following bits.

0 0 D S S S S S
0 0 0 0 U U U U

where: D	is set when a D bit is encountered (flags defective sector) - 09133-69514 controller does not use D bits
SSSSS	is a completion code for the previous command
UUUU	is the last valid unit number given in a command (the unit to which the SSSSS code applies).

The SSSSS completion code is called S1, and may have the following possible meanings.

S1	Meaning.
00000 (00H)	Normal completion, no errors.
00001 (01H)	Illegal opcode received.
01000 (08H)	Uncorrectable data error. Disc read or verify terminated because of CRC error in data field. Data is still transmitted for the bad sector.
01001 (09H)	Sector compare error. The target sector cannot be found on the current track. Retries were attempted unsuccessfully.
01010 (0AH)	I/O program error. May be caused by an illegal secondary, or wrong number of parameters. This status can only be set if the previous S1 was zero.
10001 (11H)	D bit encountered during a write, read, read verify, or verify.
10011 (13H)	Stat 2 error. Some condition in Stat 2 prevented the drive-related operation from completing normally. These conditions include: 1. Drive not connected to controller (SS = 10) 2. Hardware problem detected in drive E = 1) 3. Unformatted or unkkown format (TTTT = 0101) 4. First status bit set (F = 1).
10111 (17H)	Unit unavailable. A command included a request for a unit number out of range.
11111 (1FH)	Drive attention. The indicated drive is requesting attention because a Seek commmand completed, whether normally or abnormally. Abnormal completion may be due to drive fault, out-of-bounds target (cylinder, head or sector), or target address not found.

STAT 2

The status information in Stat 2 applies to an individual unit, so these status bits are maintained for all four possible units. The Request Status command has a unit number parameter that selects the unit for which Stat 2 bits are returned.

The Stat 2 word consists of the following bits,

```
* 0 0 T T T T 0
A 0 0 E F C S S
```

with the following meanings:

Bits	Meaning
*	Stat 2 error - E or C or SS bits not zero
TTTT	0101 = Unknown format or unformatted disc 0110 = Formatted disc 0000 = No drive attached
A	Drive attention. Set when a seek completes (successfully or unsuccessfully) - Cleared when status is read
E	Drive fault - Fault condition detected in drive during command - Cleared when status is read
F	First status bit - Set at power-on and selftest completion - Cleared when status is read
C	Seek check - A seek failed because of a hardware failure, or because the target address (cylinder, head, or sector) was out of bounds - The allowed ranges for a target address depend on both the configuration and the command being executed - Cleared when status is read
SS	00 = Drive is ready 10 = Drive not attached (not ready within 30 sec after power-on).

DSJ

The DSJ byte is returned in response to the DSJ command. It can have the following values and meanings:

0	Last operation completed normally
1	Last operation ended abnormally - status indicates error
2	Power up or selftest completed (holdoff state).

Selftest Results

The selftest results are two bytes that describe the most recently detected hardware error. These bytes are cleared when the Read Selftest command is executed.

The format of the two bytes is:

E 0 U U 0 H H H
C C C C C C C C.

where:

E	is a bit indicating that an error was detected
UU	gives the current unit when the error was detected
HHH	gives the head selected when the error was detected
CCCCCCCC	is an error code describing the failure.

If the E bit is zero (no error), then both bytes are zero.

The power-on selftest is not identical to the sefltest done in response to the Initiate Selftest command. Some continual selftesting is also done during normal command execution. See the Initiate Selftest command description for details on all of these modes of selftest.

The selftest error codes are described on the following pages.

Selftest Error Codes

Error Code		Description of Error
HEX	DECIMAL	
DCH	220	The jumper on the drive board which gives the address of the drive is set incorrectly. It should be set for 1 for a single drive.
DEH	222	The ERR bit on the 8291A was set. It is set when the 8291A tries to send a byte on the bus but there are no listeners.
DFH	223	What is written to the LED bit on the output port does not compare with what is read on the LED bit of the input port. Either the output port, input port or LED is faulty.
E0H	224	Drive 0 did not come up within 30 seconds of power on. Either no drive is attached, or the drive is faulty or there is some hardware problem with the drive ready or drive select lines.
E1H	225	WD1010 chip must be bad. What is written to the read/write registers on the WD1010 does not compare with what is read back. The chip could also be in a mode where it doesn't respond to bus activity.
E2H	226	TR000 Error. Couldn't find track zero Track zero indicator may be bad. Also check the configuration. The 5 Mbyte Dual Platter can't handle the rapid stepping pulses given the other two drives. If the

		WD1010 chip does not respond to bus activity, this error may also be seen.
E3H	227	Failed selftest. Failed the final normal read of all sectors on the selftest cylinder. At least 3 sectors either had bad CRC's or the data byte read was not 0E5H which had just been written. Could be a problem with the WD1010 chip, WD buffer, write circuitry or related hardware. 3 bad sectors is too high an error rate. You can get this error if the drive was formatted with a different configuration than you are now using.
E4H	228	The "BI" (byte in) bit of the 8291A was set for no apparent reason. This is not an error, but more of a diagnostic aid.
E5H	229	Failed selftest. After writing sequential bytes onto the disc during selftest, they are read back using a long read. The data and CRC bytes are checked. At least 5 sectors were bad. This is too high an error rate and something must be wrong.
E6H	230	The 1K buffer RAM used for data (WD_BUFFER) failed selftest.
E7H	231	There is only 1 spare sector available in the configuration chosen and the next worst sector is too bad to allow the continued use of the drive. In other words, there are two bad sectors and we can only spare one of them.

The following group are errors the WD1010 chip returns when it can't execute a command (E8H through EFH).

E8H	232	Aborted command, Drive not ready, Seek not complete
E9H	233	Aborted command, Drive not ready
EAH	234	Aborted command, Drive not ready, Write fault, and Seek not complete
EBH	235	Aborted command, Drive not ready, Write fault
ECH	236	Aborted command, Seek not complete
EDH	237	Aborted command with no error recorded
EEH	238	Aborted command, Write fault, Seek not complete
EFH	239	Aborted command, Write fault (Could be the wrong configuration jumper setting, controller expects the drive to have more heads.)
F0H	240	Timeout waiting for WD1010 to be "not busy, ready, and seek complete". WD1010 chip,drive or associated hardware must be defective.
F1H	241	This error is set if more than 1 error bit is set in the WD1010 error register or an unidentified error bit was set. For example, if the ID NOT FOUND error bit was set as well as the D BIT, only the former is reported and this selftest error is set to say that more than an ID NOT FOUND error occurred.
F2H	242	The number of hard errors has exceeded the number of spares on the track. Too many errors to format a track.

F3H	243	Failed selftest. During selftest all sectors on the selftest cylinder are written. We were unable to write at least 3 sectors. This is too high an error rate and something must be wrong. You can get this one if you format with D code and switch to L code which has more sectors per track.
F4H	244	Timeout during a read waiting for the byte out (BO) bit to equal 1 on the 8291A chip. Probably a host error; possibly a defective 8291A chip. The timeout is active only on the first byte of each block of 256 bytes transferred.
F5H	245	The "END" bit in the 8291A was set for no apparent reason. This is not an error, but just a diagnostic aid.
F6H	246	Timeout waiting for the Data Request bit in the WD1010 status register to change polarity. Could be a defective WD1010 chip or data bus problem.
F7H	247	Timeout during a write waiting for the byte in (BI) bit to equal 1 on the 8291A chip. Probably a host error, possibly a defective 8291A chip. The timeout is only active on the first byte of each block of 256 bytes transferred.
F8H	248	The long read done prior to error correction resulted in good data. No error correction was required.
F9H	249	Error correction was used and was successful.
FAH	250	Error correction was attempted but did not make a correction. The length of the error must be greater than 2 bits. The data is still bad.
FBH	251	No data was acquired during the Long Read because of a header error, so error correction could not be done.
FCH	252	The configuration jumpers are set for a non-existent configuration.
FDH	253	The head had to be moved in one cylinder (higher cylinder number) and then back out before the sector could be read. The actuator must have a hysteresis problem.
FEH	254	The head had to be moved out one cylinder (lower cylinder number) and then back in before the sector could be read. The actuator must have a hysteresis problem.
FFH	255	The two syndromes calculated from the two long reads did not compare so error correction was not attempted.

Selftest LED

SELFTEST LED BLINKING RAPIDLY

If the selftest LED is blinking rapidly, then the 6809 thinks one of the following is bad: itself, the 128 byte data RAM, the ROM checksum, or the 8291A. The 6809 is not responding to bus activity and can only be reset by cycling power or shorting the reset line.

SELFTEST LED BLINKING SLOWLY

If the selftest LED is blinking slowly, then the 6809 has discovered a problem with the user stack and is not responding to bus activity. The 6809 must be reset by cycling power or shorting the reset line.

SELFTEST LED ON
The selftest LED is on during the power-on selftest or when a selftest command is given and goes off if the selftest is completed successfully. If the selftest fails the LED remains on. If the selftest ever goes on during normal drive operation, then there has been some sort of hardware failure. Reading the selftest results tell what the failure was.

SELFTEST LED OFF
This is the normal operating state and the drive and controller are working correctly.

Target Addresses

Any individual sector on any attached drive can be addressed with a unit number, a cylinder number, a head number and a sector number. Every command which accesses the disc has to derive the address of the sector (or sectors) that are to be written or read. This address is called the target address.

Each attached unit has a current target address consisting of the cylinder, head and sector numbers. The target address may be set for any unit by the Seek command or the Set Address Record command. A clear command clears all target addresses. A "current unit" is also maintained, and is set to the last valid unit number given in any command with a unit number parameter.

These target addresses are used in different ways by different commands. The Request Logical Address command always returns the current target address for the current unit. Most other commands require a unit number parameter, and use the current target address for that unit. All of the read and write commands work this way.

Note that while the Seek and Set Address Record commands are the only ones that allow the host to set an arbitrary target address, the target address may be changed during normal execution of other commands. The read and write commands, for example, increment the target address after reading each sector so that consecutive sectors may be read. If a read or write error occurs, the target address is left pointing to the sector at which it occurred. The verify command also increments the target address, and uses the target address to point to a defective sector if one is found.

Power-On State

When power is first applied to the 09133-69514 controller, the controller will not respond to parallel polls and conducts a selftest of the controller electronics and drive. When the attached drive is ready and has been tested, the controller enables parallel poll. The maximum time from power-on until the parallel poll is enabled is roughly 60 seconds. The actual time should be considerably less if no hardware errors are detected.

Status after a NORMAL powerup will be (for all units):

DSJ = 2
S1 = 0
Selftest results = 0,0

Current unit = 0
Target addresses = 0,0,0 (cylinder,head,sector) for all units.

Stat 2 bits after normal powerup depend on the status of each unit.

		Unit attached and formatted	Unit attached not formatted	Unit not attached	Unit not allowed	
S1	=	0	0	0	17H
*	=	0	0	1	0
TTTT	=	0110	0101	0	0
E	=	0	0	0	0
C	=	0	0	0	0
SS	=	00	00	10	0

If errors are detected during the powerup selftest, the selftest bytes are set non-zero, and other status is set appropriately.

The single red LED on the 09133-69514 controller board goes on at power-on, stay on during selftest, and go off if the selftest was completed successfully. If the selftest failed the red LED remains on or blinks on and off.

Overview of Command Set

The 09133-69514 controller uses the Amigo command set. This section explains the general structure of the Amigo commands. The chart which follows and the sections "Command Order" and "Command Timing" provide additional detail. Each command also has its own explanation of syntax and function in the command descriptions.

Amigo commands can take one of several forms. The simplest is a universal command which is made up of a single primary. The only universal that we recognize is the Universal Clear. See the command description for details.

The Identify command has a syntax that is unique in the command set. The Amigo Clear also has a syntax unlike any other command. These commands are described in their respective command descriptions.

The more standard commands all have the following general structure:

1. controller is addressed to talk (listen) with a Primary talk (Primary listen) to its address
2. controller receives a secondary
3. controller sends (receives) one or more data bytes to (from) the host.

The meaning of the data bytes depends on the particular command. They may be parameters, status information, or data being written or read. The correct number of bytes is also dependent on the command.

The recommended HP-IB sequence for these commands is:

1. Primary talk (or Primary listen)

2. Secondary
3. Data bytes, if any, transferred; last one tagged with EOI
4. Primary untalk (or Primary unlisten).

This is the type of sequence shown in the individual command descriptions. Variations on this sequence are allowed to support existing drivers. These variations are described below.

The Primary listen or Primary talk may be omitted if the controller is still in the correct state (addressed to listen or addressed to talk) from a previous command.

If the 09133-69514 controller is receiving data, then a byte tagged with EOI is the recommended way of terminating the transfer. A number of other termination conditions are recognized, including:

UNL (unlisten)
IFC (interface clear)
any primary
any secondary
Universal Clear.

If the 09133-69514 controller is sending data, either the last data byte is tagged with EOI or the controller sends an extra byte of one tagged with EOI. The host may terminate the transfer earlier with:

UNT (untalk)
IFC
any primary
any secondary
Universal Clear.

The preferred method is an Untalk.

After sending a byte tagged with EOI, the 09133-69514 controller will not attempt to send any more data until a new command is received.

Command Order

Certain commands must occur in pairs and in the correct order. If the first command in a pair is followed by any command other than the required one, or the second command is given without the first immediately prior to it, an I/O program error results.

The commands which must occur in order are listed next.

First command	Second command
Request status	Send address or status
Request logical address	Send address or status
Request physical address	Send address or status
Buffered read	Send data
Unbuffered read	Send data
Buffered read verify	Send data

Unbuffered read verify	Send data
Buffered write	Receive data
Unbuffered write	Receive data
Initialize	Receive data

Note that Initiate Selftest and Read Selftest form a logical pair of commands, but the ordering restriction does not apply. See the Read Selftest command description for details.

The same applies to Write Loopback and Read Loopback. The results of Read Loopback are meaningless unless a Write Loopback was executed previously, but certain other commands may occur between them. This allows the successful completion of the Write Loopback command to be verified by requesting status. Only the DSJ, Request Status, and Send Status commands are guaranteed to work without destroying the loopback data. The End command also works for 250 compatibility.

For the pairs listed in the columns above, however, no other commands can occur between them.

Command Timing

If hosts ignore the parallel poll status and send commands in rapid succession, the controller accepts the first command and begins its execution normally. The 8291A chip handshakes the next primary while the processor is executing the earlier command, but the secondary will not be taken off the bus until the controller finishes the first command and requests the next. This could cause a bus timeout if the host does not allow enough time for the previous command to finish before expecting a completed handshake.

With some currently implemented drivers for the 9895A, a problem occurs with the commands which must be received in pairs (see "Command Order.") For these we recognize the first command in the pair and immediately look for the second, to be compatible with hosts which do not wait for parallel poll. No long operations such as seeks will be done before the second command is received.
In any future documentation for driver implementers, we will specify that they should always wait for parallel poll to be re-enabled before sending another command.

After accepting the secondary command byte, the 09133-69514 controller disables the parallel poll response. This indicates that the device is busy processing the command sequence. The actual disabling of parallel poll response may occur up to 50 microseconds after the secondary is accepted by the 09133-69514 controller. If the controller has parallel poll enabled, and the host is fast enough to send a command sequence and then conduct a parallel poll before the 09133-69514 controller has disabled the poll, the bus controller would see the wrong parallel poll response. To solve this problem, the host should introduce an intentional delay.

The 9895A and the 09133-69514 controller differ in their response time because they use different HP-IB chips.

Command Set Summary

The following chart summarizes the HP-IB sequences which are recognized as valid commands, grouped by secondaries.

The following commands are not included in the chart because they each have an HP-IB sequence that is unique.

Amigo Clear
Selected Device Clear
Universal Clear
Identify

Computer Museum

See each command description for details.

Several commands supported by the 9895A are not supported by the 09133-69514 controller. If one of these commands is given, an I/O Program Error or Illegal Opcode results. These commands are:

Cold Load Read
Set File Mask
ID Triggered Read
Download controller.

The command descriptions for these commands show their syntax. They are not included in the chart.

The following abbreviations are used for data bytes listed in the chart.

UNIT	unit number
CYLH,CYLL	cylinder number (high and low bytes)
HEAD	head number
SEC	sector number
SCNTH,SCNTL	sector count (high and low bytes)
F	format override select
DSJ	DSJ value
ST1,ST2	selftest results
X	don't care

Blanks in the opcode column indicate that no opcode is used; the secondary applies to only one command.

Note that only the lower five bits of opcodes are checked. Although the upper three bits are shown as zeros throughout this document, they are actually "don't care" bits.

Command Set Summary

Secondary	Opcode	Command Name	Data Bytes
Commands following Primary Listen:			
00		Receive Data	‹data›
08	02	Seek	UNIT,CYLH,CYLL,HEAD,SEC
	03	Request Status	UNIT
	05	Unbuffered Read	UNIT
	07	Verify	UNIT,SCNTH,SCNTL
	08	Unbuffered Write	UNIT
	0B	Initialize	UNIT
	0C	Set Address Record	UNIT,CYLH,CYLL,HEAD,SEC
	14	Request Logical Address	X
	15	End	X
09	08	Buffered Write	UNIT
0A	03	Request Status	UNIT
	05	Buffered Read	UNIT
	14	Request Logical Address	X
0B	05	Buffered Read Verify	UNIT
0C	05	Unbuffered Read Verify	UNIT
	14	Request Physical Address	X
	18	Format	UNIT,F,X,X
	19	Door Lock	UNIT
	1A	Door Unlock	UNIT
10		Amigo Clear (see description)	
11		HP-IB CRC	X,X, . . .
1E		Write Loopback	‹data›
1F		Initiate Selftest	X,X
Commands following primary talk are shown next.			
00		Send Data	‹data›
08		Send Address or Status	‹four bytes›
10		DSJ	DSJ
11		HP-IB CRC	1
1E		Read Loopback	‹data›
1F		Read Selftest	ST1,ST2

Holdoffs

Three holdoffs are defined. If a command is held off the controller sends a byte (01H) tagged with EOI if it was addressed to talk. If the controller was addressed to listen it accepts as many bytes as the host sends. The three holdoffs are listed below, and the following chart details the effect of each.

The DSJ = 2 holdoff happens after the controller is powered up, or after a selftest.

The first status holdoff occurs under the same conditions as DSJ = 2, that is, after powerup or selftest. First status is set only for units which are attached.

The DSJ = 1 and S1 is not I/O program error (S1<>10) and S1 is not Illegal Opcode (S1<>1) holdoff occurs when an error has occurred, but it is not I/O program error or Illegal Opcode. In other words, a serious error has occurred and the host has apparently not checked status (which would clear S1) to find out about it.

Other conditions may be necessary for execution of a particular command. Correct command syntax is always a requirement. Parameters must also be within allowable ranges. Commands which access the disc require that the selected unit be attached and formatted. The requirements for execution for each command are given in the command descriptions.

Holdoff Table

Command Name	None	DSJ = 2	First Status	DSJ = 1, S1<>1, S1
Identify	X	-	-	-
DSJ	X	-	-	-
Universal clear	X	-	-	-
Amigo clear	X	-	-	-
Selected device clear	X	-	-	-
Request status	-	X	-	-
Request logical addr	-	X	-	-
Request physical addr	-	X	-	-
Seek	-	X	X	-
Set address record	-	X	X	-
Buffered read verify	-	X	X	X
Unbuffered read verify	-	X	X	X
Buffered read	-	X	X	X
Unbuffered read	-	X	X	X
Buffered write	-	X	X	X
Unbuffered write	-	X	X	X
Verify	-	X	X	-
Initialize	-	X	X	-
Format	-	X	X	-
Initiate self test	X	-	-	-
Read self test	X	-	-	-
Write loopback record	X	-	-	-
Read loopback record	X	-	-	-
End	-	X	-	-
Door lock	-	X	X	X
Door unlock	-	X	X	X
HP-IB CRC	X	-	-	-

X : HOLDOFF APPLIES - : HOLDOFF DOES NOT APPLY

NOTE

Send Address Or Status, Send Data, and Receive Data are held off if the proper preceding command is held off.

Command Descriptions

Each command is described individually in the following pages. This outline is a guide to the information in each command description.

Name of Command
HP-IB Sequence:
The sequence of events over the HP-IB for a command with good syntax and normal completion. Bytes from the host to the 09133-69514 controller are shown as (X X X X X X X X), and bytes from the 09133-69514 controller to the host are shown as -X X X X X X X X-.

Description:

The function of the command.

Effect on status:

The status results for a normal completion, along with any special cases which need to be shown. A separate section of this document gives the interpretation of all of the status bits if an error occurs. See the "Status" section.

Requirements for execution:

Status requirements, valid parameter ranges, and other conditions which determine whether or not this command may be executed.

Variation from 9895A:

Usually applies only to D-codes. Any significant differences that exist between the 09133-69514 controller's response to a command and that of a 9895A.

Variations from the HP OEM Controllers:

Usually applies only to D-codes and/or L5-codes. Significant differences from the HP OEM Controller's treatment of a command.

Amigo Clear

HP-IB Sequence:

(P 0 1 A D D R S)	ATN	Primary listen
(P 1 1 1 0 0 0 0)	ATN	Secondary
	PPD	
(X X X X X X X X)	EOI	Control byte
(P 0 0 0 0 1 0 0)	ATN	Selected device clear primary
	. . . .	Clear done here
	PPE	
(P 0 1 1 1 1 1 1)	ATN	Unlisten.

Description:

The Amigo Clear command has the same effect as the Universal Clear command except that only one device is cleared. This command is also called HP300 Clear.

This command is highly preferred over the standard form for a Selected Device Clear (SDC). The 09133-69514 controller recognizes SDC's only in certain forms. See the Selected Device Clear command.

Effect on Status:

See universal clear.

Requirements for Execution:

None.

Variation from 9895A:

Parity control byte is ignored.

Variation from the HP OEM Controllers:

None.

Buffered Read and Send Data

HP-IB Sequence,

Buffered Read command:

(P 0 1 A D D R S)	ATN	Primary listen
(P 1 1 0 1 0 1 0)	ATN	Secondary
	PPD	
(0 0 0 0 0 1 0 1)		Opcode for Buffered Read
(X X X X U U U U)	EOI	Unit number
	PPE	
(P 0 1 1 1 1 1 1)	ATN	Unlisten.

where: UUUU is the unit number.

Send Data command:

(P 1 0 A D D R S)	ATN	Primary talk
(P 1 1 0 0 0 0 0)	ATN	Secondary for Send Data
	PPD	
	. . .	Read being performed
		Data is in buffer.
- X X X X X X X X -		Data Bytes being sent to host.
. . .		. . .
- X X X X X X X X -		Last data byte.
- 0 0 0 0 0 0 0 1 -	EOI	Extra byte with EOI
	PPE	Read is done
(P 1 0 1 1 1 1 1)	ATN	Untalk.

Description:

To perform a buffered read of one sector, the Buffered Read command is given, followed by the Send Data command. These commands must occur in this sequence or an I/O program error results.

Data is transferred to a buffer on the 09133-69514 controller board before being sent to the host. The host can then accept the data bytes at any rate within the 09133-69514 controller's capabilities.

The data is transmitted over the HP-IB if it is good or if it has a Data CRC error. The data bytes (256) are sent, followed by one byte of value 1 tagged with EOI. If a D bit was encountered, the ID field couldn't be found, or the Data Mark was bad, then only the single byte of value 1 is transmitted over the HP-IB.

If the data was good, the target address is incremented whether the full sector was transferred to the host or not. If the data was bad, or couldn't be found, the target address points to the bad data.

The target address can be incremented into an address which is not allowed. No error is reported unless an attempt is made to read the out-of-bounds sector.
If more than one sector is to be transferred, then any number of buffered reads can be used in succession. If an error is encountered all following reads are held off due to DSJ = 1, so an error in the middle of a long read cannot go unreported.

Effect on status,

No errors, successful read:
S1 - 0
Stat 2 - Unchanged
DSJ - 0.

Requirements for execution:

The correct number of parameter bytes must be received

The unit number selected must be attached and formatted

DSJ not 2

First status bit not be set

If DSJ = 1, then S1 must be 0AH (I/O program error) or 01H (Illegal opcode)

The target address (Cylinder,head, and sector) must be valid for the configuration.

Variation from 9895A:

The 9895A can have discs with an IBM format, using 128 bytes per sector. The 09133-69514 controller always uses 256-byte sectors .

The 9895A transfers the data if a D bit is encountered. Because of the way the WD1010 works, the 09133-69514 controller does not get any data and would have to pass dummy bytes. We send one byte tagged with EOI.

Variation from the HP OEM Controllers:

For a read of a target address which is not allowed, the HP OEM Controllers sets the D bit and sets S1 to 11H. We set the C bit,A bit, * bit and S1 = 1FH.

Buffered Read Verify and Send Data

HP-IB Sequence,

Buffered Read Verify command:

(P 0 1 A D D R S)	ATN	Primary listen
(P 1 1 0 1 0 1 1)	ATN	Secondary
	PPD	
(0 0 0 0 0 1 0 1)		Opcode for Buffered Read Verify
(X X X X U U U U)	EOI	Unit number
	PPE	
(P 0 1 1 1 1 1 1)	ATN	Unlisten.

where: UUUU is the unit number.

Send Data command:

(P 1 0 A D D R S)	ATN	Primary talk
(P 1 1 0 0 0 0 0)	ATN	Secondary for Send Data
	PPD	
	. . .	Read verify being performed
		Data is in buffer
- X X X X X X X X -		Data bytes being set to host
. . .		. . .
- X X X X X X X X -		Last data byte
- 0 0 0 0 0 0 0 1 -	EOI	Extra byte with EOI
	PPE	Buffered Read Verify is done
(P 1 0 1 1 1 1 1)	ATN	Untalk.

Description:

This command is identical to Buffered Read and Send Data.

Buffered Write and Receive Data

HP-IB Sequence,

Buffered Write command:

(P 0 1 A D D R S)	ATN	Primary listen
(P 1 1 0 1 0 0 1)	ATN	Secondary
	PPD	
(0 0 0 0 1 0 0 0)		Opcode for Buffered Write
(X X X X U U U U)	EOI	Unit number
	PPE	
(P 0 1 1 1 1 1 1)	ATN	Unlisten.

where: UUUU is the unit number.

Receive data command:

(P 0 1 A D D R S)	ATN	Primary listen
(P 1 1 0 0 0 0 0)	ATN	Secondary
	PPD	
(X X X X X X X X)		Data bytes
. . .		
(X X X X X X X X)	EOI	Last data byte
	PPE	
	. . .	Writing onto disc
	PPE	
(P 0 1 1 1 1 1 1)	ATN	Unlisten.

Description:

The Buffered Write and Receive Data commands are used to write one sector of data. This sequence must be followed or an I/O program error results.

The disc controller takes data transmitted on the HP-IB and stores it in an internal buffer before writing it on the disc. This buffering allows the host to transmit the bytes at any rate allowed by the 09133-69514 controller.

The 09133-69514 controller accepts the data bytes over the HP-IB until it has accepted 256 bytes, receives a byte tagged with EOI, or has been terminated by the host in some other manner. If less than 256 bytes are received, the remaining bytes are filled with zeros.

If more than one sector is to be written, any number of Buffered Write and Receive Data commands can be used in succession. The 09133-69514 controller increments the address automatically after each successful write. A write will fail if it follows another write which failed, so an error will not go unreported.

Effect on status,

No errors:
S1 - 0
Stat 2 - Unchanged
DSJ - 2.

Requirements for execution:

The requirements for execution are the same as those for a Buffered Read; see the Buffered Read and Send Data command.

Variation from 9895A:

No IBM format with sectors of 128 bytes is possible.

Variation from the HP OEM Controllers:

None.

Cold Load Read

HP-IB Sequence:

(P 0 1 A D D R S)	ATN	Primary listen	
(P 1 1 0 1 0 0 0)	ATN	Secondary	
	PPD		
(0 0 0 0 0 0 0 0)		Opcode	
(X X X X X X X X)	EOI	Head and sector	
	PPE		
(P 0 1 1 1 1 1 1)	ATN		Unlisten.

where: X is a don't care.

Description:

The Cold Load Read command is not supported by the 09133-69514 controller.

Effect on status:

S1 - Illegal opcode
Stat 2 - Unchanged
DSJ - 1.

Requirements for execution:

None.

Variation from 9895A:

The 09133-69514 controller does not support the Cold Load Read command

Variation from the HP OEM Controllers:

None.

Door Lock

HP-IB Sequence:

(P 0 1 A D D R S)	ATN	Primary listen
(P 1 1 0 1 1 0 0)	ATN	Secondary
	PPD	
(0 0 0 1 1 0 0 1)		Opcode
(X X X X U U U U)	EOI	Unit
	PPE	
(P 0 1 1 1 1 1 1)	ATN	Unlisten.

where: UUUU is the unit number.

Description:

No action is taken (no doors are locked), but status is updated to match 9895A operaton.

The requirements for execution are checked, and if these are met, the current unit number is updated and status is cleared as described below.

Effect on status:

S1 - 0
Stat 2 - unchanged
DSJ - 0.

Requirements for execution:

DSJ not 2,
Not first status.
Variation from 9895A:
No doors.

Variation from the HP OEM Controllers:

None.

Door Unlock

HP-IB Sequence:

(P 0 1 A D D R S)	ATN	Primary listen
(P 1 1 0 1 1 0 0)	ATN	Secondary
	PPD	
(0 0 0 1 1 0 1 0)		Opcode
(X X X X U U U U)	EOI	Unit
	PPE	
(P 0 1 1 1 1 1 1)	ATN	Unlisten.

where: UUUU is the unit number.

Description:

This command is accepted, but no action is taken; treatment is identical to Door Lock; see the Door Lock command.

Download

HP-IB Sequence:

(P 0 1 A D D R S)	ATN	Primary listen
(P 1 1 0 1 1 1 1)	ATN	Secondary
	PPD	
(X X X X X X X X)		1 to 256 bytes for 9895A
.		
.		
.		
(X X X X X X X X)	EOI	
	PPE	
(P 0 1 1 1 1 1 1)	ATN	Unlisten.

Description:

This command is unrecognized.

Effect on status:

Unrecognized secondary causes I/O program error.

Requirements for execution:

None.

Variation from 9895A:

The 09133-69514 controller does not support the Download command.

Variation from the HP OEM Controllers:

None.

Device Specified Jump (DSJ)

HP-IB Sequence:

(P 1 0 A D D R S)	ATN	Primary talk
(P 1 1 1 0 0 0 0)	ATN PPD	Secondary
- DSJ -	EOI	DSJ byte
(P 1 0 1 1 1 1 1)	ATN	Untalk.

where: DSJ is 0, 1 or 2.

Description:

The controller returns a byte indicating that the last operation completed normally or abnormally, or that the controller has just completed a power up or selftest. This command also provides a way to disable the parallel poll response. After accepting the DSJ secondary, the 09133-69514 controller disables parallel poll response (within 50 microseconds.) The DSJ values are as follows:

DSJ = 0	The last operation completed normally
DSJ = 1	The last operation ended abnormally; status indicates the current error
DSJ = 2	A power-up or selftest sequence completed DSJ = 2 is a holdoff state.

Effect on status:

S1 - unchanged
Stat 2 - unchanged
DSJ - If DSJ= 2 before this command, then DSJ0; else, unchanged.

Requirements for execution:

None.

Variation from 9895A:

No DSJ = 3 is possible.

Variation from the HP OEM Controllers:

None.

END

HP-IB Sequence:

(P 0 1 A D D R S)	ATN	Primary listen
(P 1 1 0 1 0 0 0)	ATN	Secondary
	PPD	
(0 0 0 1 0 1 0 1)		Opcode
(X X X X X X X X)	EOI	Data Byte
(P 0 1 1 1 1 1 1)	ATN	Unlisten.

Description:

If a First Status bit (F) is set for any unit (searching from unit 3 to unit 0), then do the following,

1. Set current unit to unit with First Status set
2. Set the A bit (Attention) for that unit
3. Set DSJ = 1, S1 = 1FH
4. Enable parallel poll

Otherwise, do the following instead:

1. Set S1 and DSJ to zero
2. Do not enable parallel poll.

This command is used on the 9895A flexible disc controller to notify the bus controller that a flexible disc has been removed or inserted.

Effect on status:

None.

Requirements for execution:

DSJ not 2.

Variation from 9895A:

None.

Variation from the HP OEM Controllers:

The HP OEM controller doesn't check DSJ holdoff.

Format

HP-IB Sequence:

(P 0 1 A D D R S)	ATN	Primary listen
(P 1 1 0 1 1 0 0)	ATN	Secondary
	PPD	
(0 0 0 1 1 0 0 0)		Opcode for Format
(X X X X U U U U)		Unit Number
(F X X X X X X X)		Override select bit
(X X X X X X X X)		Interleave
(X X X X X X X X)	EOI	Data Byte
	. . .	Format is in progress
	PPE	Format is done
(P 0 1 1 1 1 1 1)	ATN	Unlisten.

Computer Museum

where: UU is the unit number

F is the override old format bit

F = 1 means to override the old format; the 09133-69514 controller formats the unit, sparing the worst sectors on each track

F = 0 means to not override the old format; the 09133-69514 controller will not do any writing on the disc

The interleave can be any value and is not used by the 09133-69514 controller; on the 09133-69514 controller the interleave is always 9

The data byte can be any value and is not used by the 09133-69514 controller; the data pattern is always FFH.

Description:

The Format command is a part of the sequence of commands which changes a disc which is unformatted or has the wrong format into a disc with a usable format.

Formatting writes headers and data into all sectors of all tracks on a unit. The 0FFH data pattern is used.

If the F bit = 0, no formatting or writing on the disc is done.

If the F bit = 1, the 09133-69514 controller formats each track, reads back all sectors of the track, and repeats this process, keeping track of which sectors were bad and which took the most retries to recover the data. The track is then re-formatted sparing the 1 or 2 worst sectors. The number spared depends on the configuration.

The target address is set to 0,0,0 after the command is complete, whether the F bit was 0 or 1.

Effect on status,

No errors:

S1 - 0
Stat 2 - Unchanged
DSJ - 0.

Requirements for execution:

The correct number of parameter bytes must be received

The selected unit must be attached

DSJ not 2

First status bit not set for selected unit.

Variation from 9895A:

The 09133-69514 controller does not support variable interleave

The 9895A formats with a spiral offset; the 09133-69514 controller does not

The 9895A spares tracks and the 09133-69514 controller spares sectors

The 09133-69514 controller does nothing if F= 0

Because the 9895A has HP and IBM formats, it uses the Override Old Format Bit (F) differently than the 09133-69514 controller

Variation from the HP OEM Controllers

The 09133-69514 controller attempts to use the best sectors available by doing some sparing during the Format command.

HP-IB CRC

HP-IB Sequence (Talked version):

(P 1 0 A D D R S)	ATN	Primary talk	
(P 1 1 1 0 0 0 1)	ATN		Secondary
	PPD		
- 0 0 0 0 0 0 0 1 -	EOI		
	PPE.		

HP-IB Sequence (Listened version):

(P 0 1 A D D R S)	ATN	Primary listen
(P 1 1 1 0 0 0 1)	ATN	Secondary
	PPD	
(X X X X X X X X)		
. . .		Any number of data bytes
(X X X X X X X X)	EOI	may be sent
	PPE.	

Description:

This command is accepted without setting any error, but no action is taken.

Effect on status:

S1 - unchanged
Stat 2 - unchanged
DSJ - unchanged.

Requirements for execution:

None.

Variation from 9895A:

The 9895A sets I/O program error if any data bytes are sent in the listened version; this is not as described by 9895A documentation.

Variation from the HP OEM Controllers:

The HP OEM controllers source multiple bytes of 1 with EOI for the talk version.

Identify

HP-IB Sequence:

(P 1 0 1 1 1 1 1)	ATN	Primary UNTALK
(P 1 1 A D D R S)	ATN	My secondary
- ID1 -		First ID byte
- ID2 -	EOI	Second ID byte.

Description:

Note the non-standard sequence using a untalk followed by a secondary. The ADDRS in the secondary is the address normally recognized in primaries.

The controller will return the two identify bytes repeatedly as long as the host accepts them.

A listen address to any other address but the controller's can be sent after "my secondary" and is ignored. (This is for compatibility with the 250).
The Identify bytes are dependent on the configuration selected. See the configuration descriptions for specific values.

Effect on status:

None.

Requirements for execution:

None.

Variation from 9895A:

None.

Variation from the HP OEM Controllers:

None.

ID Triggered Read

HP-IB Sequence:

(P 0 1 A D D R S)	ATN	Primary listen
(P 1 1 0 1 0 1 1)	ATN	Secondary
	PPD	
(0 0 0 0 0 1 1 0)		Opcode
(X X X X X X X X)	EOI	
	PPE	
(P 0 1 1 1 1 1 1)	ATN	Unlisten.

where: X is a don't care.

Description:

This command is not supported.

Effect on status:

S1 - Illegal opcode
Stat 2 - Unchanged
DSJ - 1

Requirements for execution:

None.

Variation from 9895A:

The 09133-69514 controller does not support the ID Triggered Read command.

Variation from the HP OEM Controllers:

None.

Initialize and Receive Data

HP-IB Sequence,

Initialize command:

(P 0 1 A D D R S)	ATN	Primary listen
(P 1 1 0 1 0 0 0)	ATN	Secondary
	PPD	
(0 0 D 0 1 0 1 1)		Opcode for Initialize
(X X X X U U U U)	EOI	Unit number
	PPE	
(P 0 1 1 1 1 1 1)	ATN	Unlisten.

where: D is the D bit
UUUU is the unit number.

Receive Data command:

(P 0 1 A D D R S)	ATN	Primary listen
(P 1 1 0 0 0 0 0)	ATN	Secondary for Receive Data
	PPD	
(X X X X X X X X)		Data bytes
. . .		. . .
(X X X X X X X X)	EOI	Last data byte
	. . .	Performing the Initialization
	PPE	PPE after Initialize is done.
(P 0 1 1 1 1 1 1)	ATN	Unlisten.

Description:

The Initialize command must be followed by a Receive Data command. Any other command following the Initialize command result in an I/O program error.

If D = 1, the 09133-69514 controller will:

1. Format the track using the data byte 0E5H
2. Verify the track noting the worst sectors
3. Repeat steps one and two 25 times getting more data on which sectors contain the most hard errors or require the most number of retries to recover the data
4. Re-format the track replacing the worst sectors with spares, again using the data byte 0FFH.

The target address is not changed in this case.

If D = 0, the 09133-69514 controller does nothing except increment the target address.

The Initialize command does sparing of bad sectors. The interleave is always 9.
Effect on status,

No errors:
S1 - 0
Stat 2 - Unchanged
DSJ - 0

Requirements for execution:

The correct number of parameter bytes must be received

The selected unit must be attached and formatted

DSJ not 2

First status bit not set for selected unit

The target address (cylinder, head, and sector) must all be valid for the configuration.

Variation from 9895A:

The 9895A is quite different in that it spares tracks, not sectors. See the 9895A manual for an explanation of it's Initialize command.

The 9895A writes out the data to the target address; we always write the byte 0FFH.

Variation from the HP OEM Controllers:

The 09133-69514 controller handles sparing during Initialize in a manner much like that of the HP OEM controllers except for D=1, where the HP OEM controller increments the target address whereas the 09133-69514 controller and the 9895A do not.

Initiate Selftest

HP-IB Sequence:

(P 0 1 A D D R S)	ATN	Primary listen
(P 1 1 1 1 1 1 1)	ATN	Secondary
	PPD	
(X X X X X X X X)		Cylinder (ignored)
(X X X X X X X X)	EOI	Control (ignored)
. . .		Self tests are done here
	PPE	
(P 0 1 1 1 1 1 1)	ATN	Unlisten.

where: X is a don't care.

Description:

In this description, the general selftest strategy is described first, followed by additional detail on how this particular command fits into the strategy.

Selftests are performed under three conditions: at power-on (or processor reset), in response to the Initiate Selftest command, and during normal execution. Of these three modes of selftest, the power-on test is the most complete, followed by the selftest initiated in response to the command. The continual selftesting during normal command execution means that if a hardware error is detected during the execution of any command, a selftest error is set, along with appropriate status.

The power-on selftest begins by testing the processor, ROM, RAM, and the 8291A chip. A failure during any of these tests results in the processor attempting to stop execution altogether. In this case the processor hangs in a routine which blinks the selftest LED. An 8291 error means communication with the host is impossible, so continued execution is useless at best. A processor, RAM, or ROM error means that continued execution is dangerous. For example, a stuck bit in RAM or in a processor register could cause writes to be done to the wrong cylinder.

If this first part of the power-on selftest completes without error, the Inititate Selftest command is executed to complete the selftest and to initialize the system to its power-on state. The Initiate Selftest command causes the following to be done:

Test the WD1010 buffer

Test the WD1010 chip itself

Test the attached drive (restore, seek, scanid, write/read)

Check to see if the attached drive is consistent with the configuration setting
Set the TTTT, SS, and F bits for each unit to show its status (attached/not attached, formatted/not formatted)

Test the input and output ports

Reset the WD 1010 chip

Reset and initialize the 8291A chip

Update the HP-IB address from the switches

Set the current unit to zero

Clear all Stat 2 bits for all units (except TTTT, SS, and F which were set previously)

Clear all target addresses

Set S1 to zero

Set DSJ to 2.

If any of the tests fail, the selftest results show that failure and no other tests are tried.

The cylinder number and the control byte are ignored. A write/read test is done using all heads on the maximum cylinder of the disc (configuration dependent) if the drive is formatted.

The single red LED on the 09133-69514 controller is turned on during the selftest. If the selftest completes without error, the red LED is turned off. If the selftest fails, the red LED is left on or blinks depending on the error. The LED is turned off when the selftest results are read by the host.

Effect on status,

No errors:
S1 - 0
Stat 2 - Cleared; F,SS, and TTTT reset as appropriate
DSJ - 2.

Errors during test (Selftest failed):

S1 - Cleared
S2 - F,SS,TTTT reset as appropriate
*,E,C bits set to show error, if appropriate
DSJ - 2.

Requirements for execution:

None.

Variation from 9895A:

The 09133-69514 controller ignores cylinder number and write/read test selection.

Variation from the HP OEM Controllers:

A great deal; see the MSC Selftest explanation at the end of of this section.

Read Loopback Record

HP-IB Sequence:

(P 1 0 A D D R S)	ATN	Primary talk
(P 1 1 1 1 1 1 0)	ATN	Secondary
	PPD	
- X X X X X X X X -		
.		
.		
.		
- X X X X X X X X -	EOI	9 bytes
(P 1 0 1 1 1 1 1)	ATN	Untalk.

Description:

The controller sends up to 9 bytes of loopback data over the HP-IB bus. This is used by diagnostics to test the HP-IB data path. The bytes are sent back in the same order in which they were received (see the Write Loopback Record command.) The 9th byte is tagged with EOI.

Effect on status:

S1 - 0
Stat 2 - unchanged
DSJ - unchanged

Requirements for execution:

None.

Variation from 9895A:
The number of bytes stored is not 256, as in the 9895A.

Variation from the HP OEM Controllers:

The HP OEM controllers allowed up to 12 bytes to be stored. It also assumes that the number of bytes written is the number of bytes that will be read, and tags EOI accordingly. The 9895A and the 09133-69514 controllers, however, tag EOI only for the Nth byte (N = 256 for 9895A).

Read Selftest Results

HP-IB Sequence:

(P 1 0 A D D R S)	ATN	Primary talk
(P 1 1 1 1 1 1 1)	ATN	Secondary
	PPD	
- E 0 U U 0 H H H -		Selftest results
- ERROR CODE -	EOI	Selftest results
	PPE	
(P 1 0 1 1 1 1 1)	ATN	Untalk.

where: E = 1 means error has occurred
U U = unit on which error occurred
H H H = head number for which error occurred
ERROR CODE is the selftest results byte.

NOTE
If there are no errors, both returned bytes are zero.

Description:

The selftest is performed after an Initiate Selftest command, and is automatically performed at power up. The selftest results are also updated if an error occurs during normal operation or if something occurs which has diagnostic information, such as error correction being used. If you do a selftest and then read the selftest results, you get the selftest results. If you read selftest results long after the selftest was done, you either get the results of the last selftest, the results of the most recent hardware failure, or some diagnostic information.

Effect on status:

S1 - 0
Stat 2 - unchanged
DSJ - unchanged

Requirements for execution:

None.

Variation from 9895A:

The 09133-69514 controller defines the two bytes differently.

Variation from the HP OEM Controllers:

The 09133-69514 controller defines the two bytes differently.

Receive Data

HP-IB Sequence:

(P 0 1 A D D R S)	ATN	Primary listen
(P 1 1 0 0 0 0 0)	ATN	Secondary
	PPD	
(X X X X X X X X)		Data bytes
(X X X X X X X X)		. . .
. . .		. . .
. . .		. . .
(X X X X X X X X)	EOI	Last data byte
	PPE	PPE after writing completed.
(P 0 1 1 1 1 1 1)	ATN	Unlisten.

Description:

The Receive data command must follow a Buffered Write, Unbuffered Write or Initialize command. If the preceding command was not one of these, an I/O program error results and the command is not executed.

For more information about this command see the following commands:

Buffered Write and Receive Data
Unbuffered Write and Receive Data
Initialize and Receive Data.

Request Logical Address and Send Address

HP-IB Sequence:

Request Logical Address command:

(P 0 1 A D D R S)	ATN	Primary listen
(P 1 1 0 1 0 X 0)	ATN	Secondary (two possible)
	PPD	
(0 0 0 1 0 1 0 0)		Opcode
(X X X X X X X X)	EOI	Don't care
	PPE	
(P 0 1 1 1 1 1 1)	ATN	Unlisten.

Send Address or Status command:

(P 1 0 A D D R S)	ATN	Primary Talk
(P 1 1 0 1 0 0 0)	ATN	Secondary
	PPD	
- C C C C C C C C -		Cylinder - high
- C C C C C C C C -		Cylinder - low
- H H H H H H H H -		Head
- S S S S S S S S -		Sector
- 0 0 0 0 0 0 0 1 -	EOI	Extra byte with EOI
	PPE	
(P 1 0 1 1 1 1 1)	ATN	Untalk.

Description:

In response to this command pair, the 09133-69514 controller sends the four-byte current target address. The two possible secondaries (because of the Don't Care bit) have identical results.

Effect on status:

S1 - 0
Stat 2 - Unchanged
DSJ - 0.

Requirements for execution:

DSJ not 2.

Variation from 9895A:

None.

Variation from the HP OEM Controllers:

None.

Request Physical Address and Send Address

HP-IB Sequence,

Request Physical Address command:

(P 0 1 A D D R S)	ATN	Primary listen
(P 1 1 0 1 1 0 0)	ATN PPD	Secondary
(0 0 0 1 0 1 0 0)		Opcode
(X X X X X X X X)	EOI PPE	Don't care
(P 0 1 1 1 1 1 1)	ATN	Unlisten.

Send Address or Status command:

(P 1 0 A D D R S)	ATN	Primary Talk
(P 1 1 0 1 0 0 0)	ATN PPD	Secondary
- C C C C C C C C -		Cylinder--high
- C C C C C C C C -		Cylinder--low
- H H H H H H H H -		Head
- 0 0 0 0 0 0 0 0 -		Zeroes
- 0 0 0 0 0 0 0 1 -	EOI PPE	Extra byte tagged with EOI
(P 1 0 1 1 1 1 1)		ATN Untalk.

Description:

The controller sends the four-byte physical address. The physical address is the same as the logical address, except that the sector number byte is replaced with zeros.

Effect on status:

S1 - 0
Stat 2 - Unchanged
DSJ - 0.

Requirements for execution:

DSJ not 2.

Variation from 9895A:

The 09133-69514 controller physical and logical addresses are always the same.

Variation from the HP OEM Controllers:

None.

Request Status and Send Status

HP-IB Sequence,

Request Status command:

(P 0 1 A D D R S)	ATN	Primary listen
(P 1 1 0 1 0 X 0)	ATN	Secondary (two possible)
	PPD	
(X X X 0 0 0 1 1)		Opcode
(X X X X U U U U)	EOI	Unit
	PPE	
(P 0 1 1 1 1 1 1)	ATN	Unlisten.

where: X is a don't care
UUUU is the unit number.
Send Address or Status command:

(P 1 0 A D D R S)	ATN	Primary Talk
(P 1 1 0 1 0 0 0)	ATN	Secondary
	PPD	
- 0 0 D S S S S S -		
- 0 0 0 0 0 0 U U -		
- * 0 0 T T T T X -		
- A 0 0 E F C S S -		
- 0 0 0 0 0 0 0 1 -	EOI	Extra byte tagged with EOI.
	PPE	
(P 1 0 1 1 1 1 1)	ATN	Untalk.

Description:

In response to this command pair, the 09133-69514 controller sends four bytes of status.

If the unit number is out of range, then the four bytes returned are:

17H (S1 - unit unavailable)
bad unit number
0
0.

Although an S1 value of 17H is returned, S1 is set to zero upon completion of this command. Any previous S1 error is forgotten. DSJ is also set to 0. The logical address stays the same, with the unit being the last valid unit accessed.

Note that if a valid unit number is given as a parameter, the unit given becomes the next current unit. Stat 1 (first two bytes) is returned for the last valid unit accessed, but Stat 2 represents status for the unit given as a parameter.

Effect on status,

No errors:
S1 - 0
Stat 2 - Bits A,E,F,C are cleared for unit given as parameter.
DSJ - 0.

Computer Museum

Requirements for execution:

DSJ not 2

Unit number within allowed range for configuration.

Variation from 9895A:
None.
Variation from the HP OEM Controllers:

None.

SEEK

HP-IB Sequence:

(P 0 1 A D D R S)	ATN	Primary listen
(P 1 1 0 1 0 0 0)	ATN	Secondary
	PPD	
(0 0 0 0 0 0 1 0)		Opcode
(X X X X U U U U)		Unit number
(C C C C C C C C)		Cylinder High
(C C C C C C C C)		Cylinder Low
(0 0 0 0 0 0 H H)		Head
(S S S S S S S S)	EOI	Sector
(P 0 1 1 1 1 1 1)	ATN	Unlisten
	. . .	Seek in progress
	PPE	On seek completion.

where: UUUU is the unit number
CCCCCCCC is the cylinder number (two bytes)
HH is the head number
SSSSSSSS is the sector number.

Description:

The seek command updates a unit's target address and moves the head actuator to the new target cylinder. A seek usually precedes a data transfer operation or a series of consecutive data transfers.

The target address will only be set if it is valid for the configuration.

The 09133-69514 controller does not support overlapped seek operations. The seek is completed before parallel poll is re-enabled and another command may be executed.

Effect on status,

No errors:
S1 - 1FH
Stat 2 - A bit set
DSJ - 0.

Requirememts for execution:

The correct number of parameter bytes must be received

The selected unit must be attached and formatted

DSJ not 2
First status bit not set

The target address (cylinder,head,sector) must be valid for the configuration.

Variation from 9895A:

Because the 9895A has a removable media, some of the conditions for setting the S1 Drive Attention are different.

Variation from the HP OEM Controllers:

None.

Selected Device Clear

HP-IB Sequence:

(P 1 0 A D D R S)	ATN	Primary listen
(0 0 0 0 0 1 0 0)	ATN	Selected device clear
	PPD	
. . .		Clear done here
	PPE.	

Description:

The 09133-69514 controller supports this command in a limited fashion for compatibility with existing host drivers. Special hardware has been added to allow the previous syntax to be recognized. The syntax for an Amigo Clear, which includes a Selected Device Clear primary, can be recognized by the 09133-69514 controller without the additional hardware. For this reason, in all documentation and in interaction with people writing host drivers, we highly discourage the use of SDC commands except in the Amigo Clear syntax.

Future versions of the 09133-69514 controller may not include the hardware required to support SDC's.

Note also that other legal forms of the SDC command are possible that are not supported at all; now or ever.

See the universal clear command for a list of the operations done by the 09133-69514 controller during the Clear.

Send Address or Status

HP-IB Sequence:

(P10ADDRS)	ATN	Primary talk
(P1101000)	ATN	Secondary
	PPD	
-XXXXXXXX-		Byte 1
-XXXXXXXX-		Byte 2
-XXXXXXXX-		Byte 3
-XXXXXXXX-		Byte 4
-00000001-	EOI	Terminating byte
	PPE	
(P1011111)	ATN	Untalk.

Description:

This command results in an I/O Program error unless it immediately follows one of the following commands: Request Status, Request Logical Address, or Request Physical Address. For a description of the four bytes sent in response to each of these commands, see the particular commmand description.

A fifth byte of one tagged with EOI is always sent as shown previously.

Send Data

HP-IB Sequence:

(P10ADDRS)	ATN	Primary talk
(P1100000)	ATN	Secondary
	PPD	
-XXXXXXXX-		Data Bytes
...		...
-XXXXXXXX-	EOI	Last data byte
	PPE	
(P1011111)	ATN	Untalk.

Description:

The Send Data command follows a buffered or unbuffered Read Request or a buffered or unbuffered Read Verify. These commands must precede the Send Data command or an I/O program error is set.

For further information, see the following commands:

Buffered Read and Send Data
Buffered Read Verify and Send Data
Unbuffered Read and Send Data
Unbuffered Read Verify and Send Data.

Set Address Record

HP-IB Sequence:

(P 0 1 A D D R S)	ATN	Primary listen
(P 1 1 0 1 0 0 0)	ATN	Secondary
	PPD	
(0 0 0 0 1 1 0 0)		Opcode
(X X X X U U U U)		Unit number
(C C C C C C C C)		Cylinder High
(C C C C C C C C)		Cylinder Low
(0 0 0 0 0 0 H H)		Head
(S S S S S S S S)	EOI	Sector
(P 0 1 1 1 1 1 1)	ATN	Unlisten
	PPE.	

where: UUUU is the unit number
CCCCCCCC is the cylinder number (two bytes)
HH is the head number
SSSSSSSS is the Sector number.

Description:

The Set Address Record command is identical to the Seek command except that the actual seek is not done. The target address and status are set just as if a Seek command had been executed instead; the physical position of the heads remains unchanged.

See the Seek command description for details.

Set File Mask

HP-IB Sequence:

(P 0 1 A D D R S)	ATN	Primary listen
(P 1 1 0 1 0 0 0)	ATN	Secondary
	PPD	
(0 0 0 0 1 1 1 1)		Opcode
(X X X X X X X X)	EOI	
	PPE	
(P 0 1 1 1 1 1 1)	ATN	Unlisten.

where: X is a don't care.

Description:

This command was added by the HP OEM Controllers as a result of incorrect information about a particular host computer. It is useless, and is ignored.

Effect on status:

S1 - Illegal opcode
Stat 2 - Unchanged
DSJ - 1.

Requirements for execution:

None.

Variation from 9895A:

None.

Variation from the HP OEM Controllers:

Not supported.

Unbuffered Read and Send Data

Unbuffered Read command:

(P 0 1 A D D R S)	ATN	Primary listen
(P 1 1 0 1 0 0 0)	ATN PPD	Secondary
(X X X 0 0 1 0 1)		Opcode for Unbuffered Read
(X X X X U U U U)	EOI PPE	Unit number
(P 0 1 1 1 1 1 1)	ATN	Unlisten.

where: UUUU is the unit number.

Send Data command:

(P 1 0 A D D R S)	ATN	Primary talk
(P 1 1 0 0 0 0 0)	ATN PPD	Secondary for Send Data
	. . .	First sector being read First sector data is in buffer
- X X X X X X X X -		Data bytes being sent to host
. . .		. . .
- X X X X X X X X -		The 256th data byte
	. . .	Next sector being read Data is in buffer

The process of reading and sending data continues until the host terminates the transfer or the end of the unit is reached

- X X X X X X X X -		Data bytes being sent to host
. . .		. . .
- X X X X X X X X -		
(P 1 0 1 1 1 1 1)	ATN PPE.	Untalk (terminates transfer)

Description:

The unbuffered read allows more than one sector to be transferred from the disc to the bus controller using a single command.

To perform an unbuffered read, the Unbuffered Read command is given, followed by the Send Data command. The commands must be given in this order or an I/O program error results.

If the data is good, it continues to be transferred over the HP-IB bus in bursts of length 256 until the host terminates the transfer. If a hard data CRC error is encountered, the bad data is transferred, followed by a single byte of value 1 tagged with EOI. If a D bit is encountered, the ID field couldn't be found, the ID field was bad, or the Data Mark was bad, a single byte of value 1 tagged with EOI is transmitted to the host.

The target address is incremented for each good sector whether the host accepted the entire sector or not. If the data was bad, or couldn't be found, the target address points to the bad data and no more reads are performed.

If the target address is incremented into an invalid address, the command execution stops and a byte of value 1 tagged with EOI will be transmitted to the host. No error bits are set. This method is valid for terminating an Unbuffered Read.

The unbuffered read actually uses the internal buffer to store the data. The protocol is unbuffered in that the parallel poll response is not used to indicate when data is available. There is a pause in data flow to the HP-IB each time the buffer is refilled from the disc. This pause occurs at the beginning of the read and after every sector has been transferred. Depending on when the read is started and the sector interleaving, this pause may be up to 30 milliseconds.

Effect on status,

No errors:

S1 - 0
Stat 2 - Unchanged
DSJ - 0.

Requriements for execution:

The requirements for execution are identical to those of the Buffered Read command. See Buffered Read command.

Variation from 9895A:

The 09133-69514 controller always uses sectors with 256 bytes; the 9895A in IBM format can have sectors with 128 bytes.

The 9895A transfers the data if a D bit is encountered. Because of the way the WD1010 works, the 09133-69514 controller does not get any data and would have to pass dummy bytes. We send one byte tagged with EOI.

Variation from the HP OEM Controllers:

For a read of a target address which is not allowed, the HP OEM Controllers sets the D bit and sets S1 to 11H. We set the C,A,* bits and set S1 = 1FH.

Unbuffered Read Verify and Send Data

HP-IB Sequence,

Unbuffered Read Verify command:

(P 0 1 A D D R S)	ATN	Primary listen
(P 1 1 0 1 1 0 0)	ATN	Secondary
	PPD	
(0 0 0 0 0 1 0 1)		Opcode for Unbuffered Read Verify.
(X X X X U U U U)	EOI	Unit number
	PPE	
(P 0 1 1 1 1 1 1)	ATN	Unlisten.

where: UUUU is the unit number.

Send Data command:

(P 1 0 A D D R S)	ATN	Primary talk
(P 1 1 0 0 0 0 0)	ATN	Secondary for Send Data
	PPD	
	. . .	First read being performed
		Data is in buffer
- X X X X X X X X -		Data bytes being sent to host
. . .		. . .
- X X X X X X X X -		The 256th byte
	. . .	Next read being performed
		Data is in buffer

this process continues

- X X X X X X X X -		Data bytes being sent to host
. . .		. . .
- X X X X X X X X -	EOI	Last data byte
	PPE	Unbuffered Read Verify is done
(P 1 0 1 1 1 1 1)	ATN	Untalk.

Description:

This command is identical to Unbuffered Read and Send Data.

Unbuffered Write and Receive Data

HP-IB Sequence,

Unbuffered Write command:

(P 0 1 A D D R S)	ATN	Primary listen
(P 1 1 0 1 0 0 0)	ATN	Secondary
	PPD	
(0 0 0 0 1 0 0 0)		Opcode for Unbuffered Write
(X X X X U U U U)	EOI	Unit Number
	PPE	
(P 0 1 1 1 1 1 1)	ATN	Unlisten.

where: UU is the Unit Number.

Receive Data command:

(P 0 1 A D D R S)	ATN	Primary listen
(P 1 1 0 0 0 0 0)	ATN	Secondary
	PPD	
(X X X X X X X X)		Data bytes
. . .		. . .
(X X X X X X X X)		256th Data Byte
	. . .	Writing the first sector
		Write complete
(X X X X X X X X)		More data bytes
. . .		. . .

The process of receiving data and writing to the disc continues

. . .		
(X X X X X X X X)	EOI	Last data byte
	. . .	Last sector is written to disc
	. . .	
	PPE	PPE after all writing completed
(P 0 1 1 1 1 1 1)	ATN	Unlisten.

Description:

The Unbuffered Write allows more than one sector to be transferred from the bus controller to the disc using a single HP-IB command sequence.

To perform an Unbuffered Write requires that the Unbuffered Write Command be given, followed by the Receive Data command. This sequence must be followed or an I/O program error results. After the Unbuffered Write command, only a Receive Data command will be accepted.

The 09133-69514 controller accepts bytes over the bus. When it has received 256 bytes, it writes these to the disc, increments the target address, and accepts some more from the host. This is continued until one of the following happens:

1. The 09133-69514 controller receives a byte tagged with an EOI (or other termination condition)

2. The write can't be performed because the ID field couldn't be found or there was some other error making
   it impossible to do the write; the target address will remain pointing to the defective sector; status is set appropriately and the remaining data is accepted from the host but not written to the disc
3. The target address points to a non-existent cylinder; Status is set to show an error and the remaining data is accepted from the host but not written to the disc.

If only a partial sector is received when the host terminates the transfer, the remaining bytes in the sector are filled with zeros.

As in the Unbuffered Read, Unbuffered Write actually uses the internal buffer of the controller. The protocol is unbuffered in that the parallel poll is not used to indicate when data may be sent to the 09133-69514 controller. There is a pause in the data flow to the 09133-69514 controller each time the buffer is written to the disc. The pause occurs after each sector is transferred. Depending on when the write starts and the interleave, this is pause may be up to 30 milliseconds long.

Effect on status,

No errors:

S1 - 0
Stat 2 - Unchanged
DSJ - 0.

Requirements for execution:

The requirements for execution are identical to those of a Buffered Read; see the Buffered Read and Send Data command.

Variation from 9895A:

No IBM format with 128 byte sectors is possible with the 09133-69514 controller.

Variation from the HP OEM Controllers:

None.

Universal Clear

HP-IB Sequence:

(P 0 0 1 0 1 0 0)	ATN	Universal clear
	PPD	
. . .		Clear operations done here
	PPE.	

Description:

The Universal Clear places the controller into a known state; the following operations are performed -

HP-IB address is updated from the switches

The 8291A chip is reset and initialized

All drives are recalibrated to physical track zero

The target address is set to cylinder 0, head 0, sector 0 for all units
Status is updated as described below

The First Status bits are cleared; this is done for compatibility with Colorado Springs drivers

The current unit is set to zero.

Effect on status:

S1 - 0
Stat 2 - Clear A,C,E,F for all units
DSJ - 0.

Requirements for execution:

None.

Variation from 9895A:

9895A does not clear first status.

Variation from the HP OEM controllers:

The 9134A does not update the HP-IB address switches during a Clear command; the only way to update them is to cycle the power.

Verify

HP-IB Sequence:

(P 0 1 A D D R S)	ATN	Primary listen
(P 1 1 0 1 0 0 0)	ATN	Secondary
	PPD	
(0 0 0 0 0 1 1 1)		Opcode for Verify
(X X X X U U U U)		Unit Number
(X X X X X X X X)		MSB sector count
(X X X X X X X X)	EOI	LSB sector count
	. . .	Doing verify during this time
	PPE	Verify completed
(P 0 1 1 1 1 1 1)	ATN	Unlisten.

where: UUUU is the unit number.

Description:

The Verify command is a read which does not transfer data to the HP-IB. This is useful for performing a surface analysis of the disc or checking the integrity of the data of the disc.

Starting with the target sector, consecutive sectors are read until any of the following occurs:

Sector count given in command expires

A seek or read error occurs

A sector marked "defective" is detected

The end of the unit is reached.

Parallel poll response is re-enabled upon completion of the verify. If an error was detected , the target address points to the sector in which the error occurred. Otherwise, the target address points to the sector following the last sector read.

The sector count is a 16-bit unsigned binary number. It can be any value and is not checked for bounds. If it is too large the verify stops when we reach the maximum target address. If the count is zero, the entire disc is verified.

Auto-incrementing into an out-of-bounds cylinder does not result in an error.

Effect on status,

No errors:
S1 - 0
Stat 2 - Unchanged
DSJ - 0.

Requirements for execution:

The correct number of parameter bytes must be received

The selected unit must be attached and formatted

DSJ not 2

First status bit not set for selected unit

The target address (Cylinder, head, and sector) must be valid for the configuration.

Variation from 9895A:

The 9895A does the reads with reduced margin which is not possible with the WD1010. To simulate reduced margin, the 09133-69514 controller reports a hard CRC error on a sector if it takes too many retries to get the data.

Variation from the HP OEM Controllers:

The HP OEM Controllers simulates reduced margin by doing the verify and allowing only errors of burst length 6 bits or less to be corrected. Normally the HP OEM controller can correct single burst errors of up to 11 bits.

Write Loopback record

HP-IB Sequence:

(P 0 1 A D D R S)	ATN	Primary listen
(P 1 1 1 1 1 1 0)	ATN	Secondary
	PPD	
(X X X X X X X X)		
. . .		
(X X X X X X X X)	EOI	1 to 9 bytes
	PPE	
(P 0 1 1 1 1 1 1)	ATN	Unlisten.

Description:

The controller stores up to 9 bytes in its RAM. The last byte must be tagged with EOI. If more than 9 bytes are sent, the extra bytes are not stored.

Effect on status:

S1 - unchanged
Stat 2 - unchanged
DSJ - unchanged.

Requirements for execution:

None.

Variation from 9895A:

The number of bytes stored is not 256, as in the 9895A.

Variation from the HP OEM Controllers:

The HP OEM controllers allowed up to 12 bytes to be stored.

The 88134-69910, 09135-69515, and the 09135-69501 Controllers

This section completes the firmware description for the Microcomputer Systems Corporation (MSC) designed controllers (88134-69910, 09135-6915, and the 09135-69501). These controllers were used with the earlier 5 Mbyte Dual Platter Drives (09135-69600).

The logical configuration of this 5 Mbyte Dual drive can be either the D-code (4-Volume) or the L-Code (Single-Volume). The two types are very similar, differing primarily in the way logical units are related to the physical drive.

The D-code configurations cause a 5 Mbyte drive to appear, to the host, as a four-unit 9895A flexible disc. One physical drive is addressed as if it were four separate (and smaller) drives. The physical cylinder, sector, and head numbering of the drive being used are mapped into the cylinder, sector, and head numbering that the host would expect to see for each 9895A unit.

The controller also identifies itself to the host as a 9895A. This logical format allows hosts with existing 9895A drivers to use the Winchester drives without investing any time in writing new drivers.

The L-codes are similar to D-codes in that they also use the 9895A Amigo protocol. With L-code, however, a drive does not appear to the host to be identical to the 9895A. One physical drive becomes one logical unit, with cylinder, sector, and head numbering corresponding (usually) to the physical organization of the drive. This logical format allows 9895A drivers to be easily modified to use an L-code configuration, and allows drives of larger capacities to be used.

The following chart summarizes the differences between the various configurations.

NOTE

"Unit" refers to a logical unit, and "drive" refers to the physical disc drive. "Units per drive" is therefore the number of logically-addressed units on a single-disc drive.

The last physical cylinder is used to perform a write/read selftest, which would destroy any user data on that cylinder. For this reason, commands that read or write are not allowed to access the last physical cylinder (selftest cylinder) so that no user data can be written there. The cylinder range allowed for reads and writes is given in the table as "logical read/write cylinders." The full range of logical cylinders is available to other commands such as Format and Initialize.

	D-Code 5 Mbyte Dual Platter	L-Code 5 Mbyte Dual Platter
Identify bytes	00H, 81H	01H, 06H
Max. number of drives supported	1	1
Units per drive	4	1
Physical cylinders per drive	0 to 152	0 to 152
Logical cylinders per unit	0 to 76	0 to 152
Logical read/write cylinders per unit	0 to 75	0 to 151
Selftest cylinder, logical (each unit)	76	152
Selftest cylinder, physical	152	152
Physical heads	4	4
Logical heads	2	4
Physical sectors per track	32	32
Spare sectors per track	2	1
Usable sectors per track	30	31
Address mapping required?	yes	no

Computer Museum

Address Transformations

The host addresses a particular sector with a unit number, a cylinder number, a head number, and a sector number. This logical address for a sector is dentical to the physical address only for configurations in which each disc drive corresponds to a single logical unit, and in which the logical and physical ranges for cylinder, head, and sector numbers are the same.

D-Code Dual Platter Transformations

The 5 Mbyte Dual Platter hard disc used in the D-Code configuration has 153 cylinders, 4 heads, and 32 sectors per track. It is made to appear to be a 9895A which has four units, each having 77 cylinders, 2 heads, and 30 sectors per track. A command to access a unit, cylinder, head, and sector of the (logical) 9895A is mapped into a cylinder, head, and sector of the (physical) 5 Mbyte Dual Platter drive.

Note, for each unit, the 9895A cylinder number 76 maps into the last physical cylinder of the drive (152 on the 5 Mbyte Dual Platter). These cylinders are used for the write/read selftest, and the host is prevented from using the for data.

The following formulas map logical 9895A addresses into physical address.

Cylinder:

5 Mbyte Dual Platter cylinder = 38*(unit number) + (9895A cylinder)/2
if 9895A cylinder is even,
OR 38*(unit number) + (9895A cylinder-1)/2
if 9895A cylinder is cold

Head:

5 Mbyte Dual Platter head = 0 if 9895A head = 0 and unit number is even

= 1 if 9895A head = 1 and unit number is even
= 2 if 9895A head = 0 and unit number is odd
= 3 if 9895A head = 1 and unit number is odd

Sector:

No transformation is required for sector numbers.

The following table shows this mapping.

	Logical (9895A)		PHYSICAL (5 Mbyte Dual Platter)	
UNIT	HEAD	CYLINDER	HEAD	CYLINDER
0	0	0	0	0
0	1	0	1	0
	0	1	2	0
0	1	1	3	0
...	...	...	...	...
0	0	74	0	37
0	1	74	1	37
0	0	75	2	37
0	1	75	3	37
0	0	76	0	152
0	1	76	1	152
1	0	0	0	38
1	1	0	1	38
1	0	1	2	38
1	1	1	3	38
...	...	...	...	...
1	0	74	0	75
1	1	74	1	75
1	0	75	2	75
1	1	75	3	75
1	0	76	2	152
1	1	76	3	152
2	0	0	0	76
2	1	0	1	76
2	0	1	2	76
2	1	1	3	76
...	...	...	...	...
2	0	74	0	113
2	1	74	1	113
2	0	75	2	113
2	1	75	3	113
2	0	76	0	152
2	1	76	1	152
3	0	0	0	114
3	1	0	1	114
3	0	1	2	114
3	1	1	3	114
...	...	...	...	...
3	0	74	0	151
3	1	74	1	151
3	0	75	2	151
3	1	75	3	151
3	0	76	2	152
3	1	76	3	152

L-Code Dual Platter Address Transformation

The Dual Platter configuration uses identical logical and physical addresses. The 5 Mbyte Dual Platter has 153 cylinders and 4 heads. The following shows the mapping used:

LOGICAL (5 Mbyte Dual Platter)	
HEAD	CYLINDER
0	0
1	0
2	0
3	0
0	1
1	1
2	1
3	1
0	2
1	2
...	...
0	151
1	151
2	151
3	151
0	152
1	152
2	152
3	152

Initate Selftest

HP-IB Sequence:

(P 0 1 A D D R S)	ATN	Primary listen
(P 1 1 1 1 1 1 1)	ATN	Secondary
	PPD	
(C C C C C C C C)		Cylinder
(X X X X W X X X)	EOI	Control
	PPE	
(P 0 1 1 1 1 1 1)	ATN	Unlisten.

Description:

This command gives the user the capability to remotely initiate the selftest. The selftest results may be read back using the Read Selftest Results command. Selftest takes approximately 7 seconds to complete.

Two bytes are sent following the selftest secondary and contain the following information:

The first byte contains the cylinder to be tested and is only pertinent if the W bit is set in the second byte of the command; the W bit is interperted as follows:

0- No write/read test performed,
1- The write/read test is performed on the designated cylinder.

If the write/read test is selected, all data on the selected cylinder is lost; if the write/read test is not selected, the controller verifies cylinder 0, sector 0 of all units.

After the execution of the selftest, the controller is in the same state as a power-on condition would leave it. Selftest clears the Stat 1 bytes for all units. Also, the first status bits are set for all units. If, during the verify, the controller determines that the drive is unformatted, it sets the appropriate Sat 2 bytes for unformatted status. This status only changes if a Format command is issued to that particular unit. If the verify determines that the drive is formatted, but at some later time detects an unformatted drive (assuming that the controller isn't powered down or reset), the controller sets the E-bit in stat 2, but does not set the TTTT bits to "unformatted status". The only command that resets this status is the Format command. Other commands can be executed if this bit is set, but they will not reset the E-bit upon completion.

The selftest write test reformats the selected test cylinder. This reformatting destroys data and alternate sector assignments on the selected cylinder. After the write test is performed, the user should seek back to the test cylinder, and use the Initialize command with the D-bit set; repeating for all heads. This restores any alternate sector assignment. The Power Up Selftest and Initiate Selftest are the only commands which can return the Unknown Format status.

Effect on status,

No errors:
S1 - 0
Stat 2 - Cleared, the bits E, F, C, and * set, if appropriate
DSJ - 2.

Errors during test:

S1 - Cleared
S2 - Cleared, the bits E, F, C, and * set, if appropriate.

Error during write/read test:

Target address left pointing at sector in which error occurred; the drive is then recalibrated.

Illegal cylinder number:
S1 - Drive attention
Stat 2 - Bit C and A are set
DSJ - 1.

The parallel poll response is re-enabled after the operation is completed, normally or abnormally.

Read Selftest Results

HP-IB Sequence:

(P10ADDRS)	ATN	Primary Talk
(P1111111)	ATN	Secondary
	PPD	
(EHUUF000)		Selftest Results
(MOD-STAT)	EOI	Module Status
	PPE	
(P1011111)		Untalk.

where: E - Error bit - If on, then an error has occurred
H - Head number - Indicates which head the read or write test failed on
UU - Unit number - Indicates which unit was selected when the error occurred
F - Format of operation - Indicates HP (1) operation at the time of failure.

Description:

The controller returns the results of the last selftest it has performed. This is useful after the Initiate Selftest command or after the controller has been powered on (it performs a selftest at power-on). After receiving the selftest secondary, the controller makes two bytes of the selftest results available. The second byte is tagged with an EOI. The first byte is only valid if the preceding command was the Initiate Selftest command or if the controller was just powered up. The module status byte is always available by reading selftest results without preceding the command with an Initiate Selftest command, and module status contains the status of the last disc-oriented command executed.

Module Status (MOD-STAT)

Hexadecimal Code	Meaning
00	No error
01	Invalid command from controller processor
02	Drive not ready
03	Seek timeout (2 seconds)
04	Invalid track 00 indication from disc drive
05	All ID fields bad on track
06	Target sector not found
07	No sector found and ID ECC error on target sector
08	Position error (seek error)
09	Defective module or support signals
0A	Drive fault active
0B	Index/Sector timeout
0C	Command parameter error from controller processor
0D	Uncorrectable ECC error
** 1X	Correctable ECC error
20	Write alternate error
21	Invalid alternate sector assignment
22	Alternate alrady assigned
23	Direct access to alternate sector
24	Defective processor
25	Defective buffer memory
26	Defective ECC circuitry
27	Defective program memory
28	Illegal sector poulse during diagnostic
29	Illegal interleave table parameter
30	Module timeout (during selftest)

** X is the length of the burst error which can be 1 to B
to note if the correction span was 1 to 11 bits.

The 09133-69508 Controller

The information in this appendix which applies to the 09133-69514 controller also applies to the 09133-69508 controller with the following exceptions:

Configurations:

The configurations which are currently supported in the 9133V/XV and 9134XV products are as follows:

Physical:	5-Mbyte Single Platter	15-Mbyte Triple Platter
Logical:		
Single volume (5)	X	
Four volume (5)	X	
Single volume (15)		X

The chart on page A-4 applies to the 5-Mbyte single and four volume configurations directly. The 15-Mbyte configuration is identical to the 10-Mbyte column for the 09133-69514 controller except that the Identify Bytes are 01H,0FH, and the physical and logical number of heads are both 6.

Spare Manual
RL 13227
TS 2178

HEWLETT PACKARD

MANUAL UPDATE 5957-6571

UPDATE FOR THE 5 1/4-INCH WINCHESTER DISC DRIVE SERVICE MANUAL (PART NUMBER 09134-90032)

This update is for the tabbed section of the manual labeled HP 9133D and 9134D. The update covers information on the HP 9133/34 H and L products.

To update your manual, remove the old tab and text from the manual and replace it with this update.

The updated section contains a revision date below the page numbers.

General Information

CHAPTER 1

Introduction

The HP 9133/34D,H and L products (Figure 1-1) are random access data storage devices containing a 5 1/4-inch Winchester drive providing 15, 20 and 40 Mbytes of storage capacity respectively.

The HP 9133/34D,H and L products use the SUBSET 80 command set.

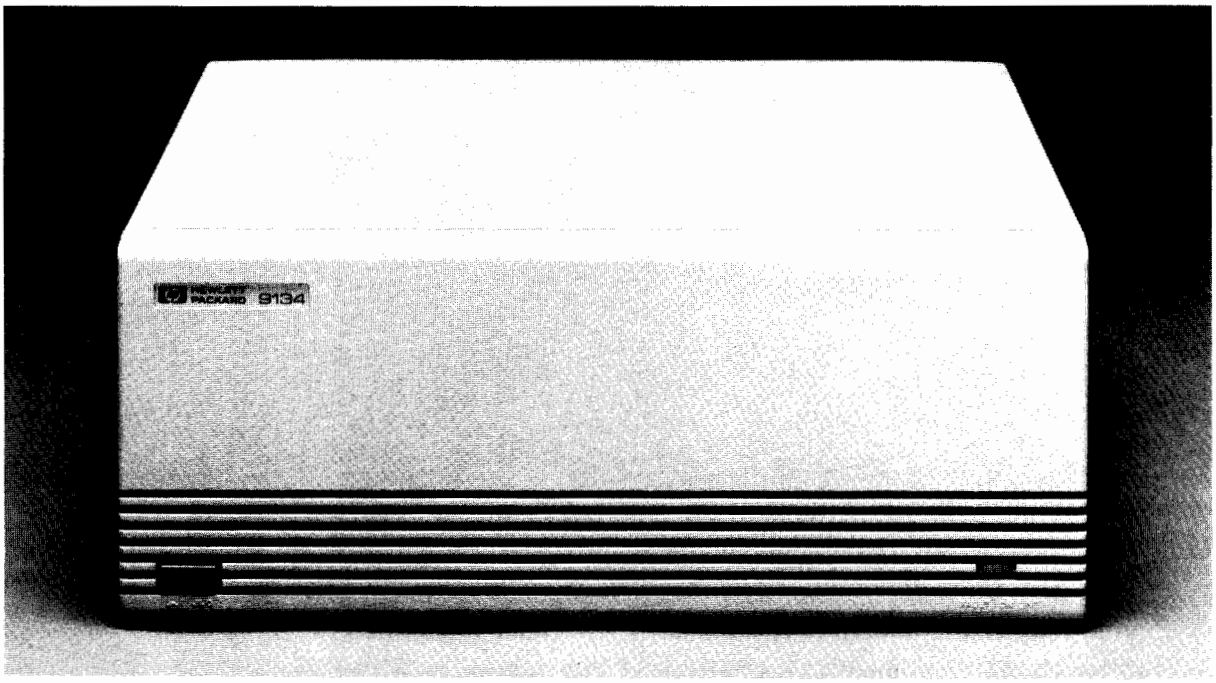

Figure 1-1. HP 9134D,H and L Disc Memory.

The date which appears below the page number represents the revision date for that page. Each page revised will contain a date in this area.

Part Number 5957-6571

Specifications

PERFORMANCE CHARACTERISTICS

	15 Mbyte(D) Winchester	20 Mbyte(H) Winchester	40 Mbyte(L) Winchester
Maximum Formatted Capacity:			
HP 150			
Bytes Per Unit	14.8 MB	20.0 MB	40.02 MB
Bytes per Sector	256	256	256
Sectors per Track	32	32	32
Series 200 (BASIC and Pascal)			
Bytes Per Unit	14.8 MB	20.0 MB	40.02 MB
Bytes Per Sector	256	256	256
Sectors per Track	32	32	32
Series 200 (HPUX)			
Bytes Per Unit	16.6 MB	22.56 MB	45.02 MB
Bytes Per Sector	1024	1024	1024
Sectors per Track	9	9	9
Tracks per Surface	303	612	977
Surfaces per Disc	2	4	5
Tracks per inch	135	580	960
Recording Format	MFM	MFM	MFM
Max Sustained Transfer Rate*	145 KB/s	140 KB/s	140 KB/s
Average Access Time	85 ms	85 ms	40 ms
Maximum Access Time	205 ms	205 ms	80 ms
Rotational Speed	3600 rpm	3600 rpm	3600 rpm

* Mainframe and interleave dependent.

ENVIRONMENTAL RANGES

The following chart shows the acceptable environment for the HP 9133 and HP 9134 series products.

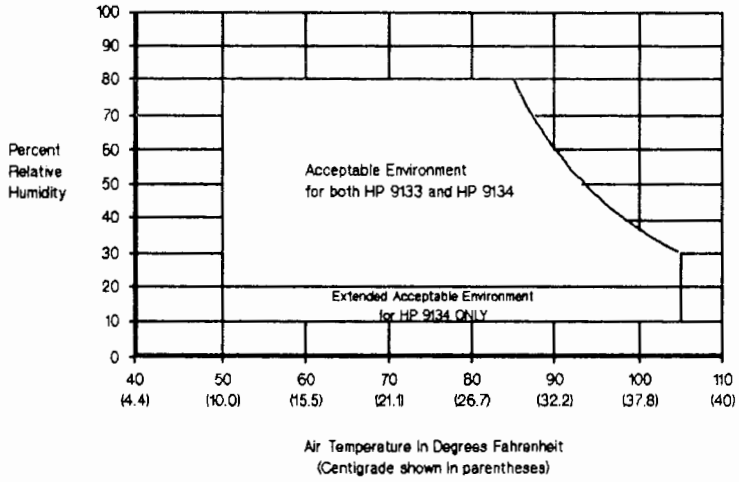

Computer Museum

		9133D,H,L	9134D,H,L
Altitude			
Operating		0 to 4572m (0 to 15000 ft)	0 to 4572m (0 to 15000 ft)
Non-Operating		-304 to 1524m (-1000 to 50000 ft)	-304 to 1524m (-1000 to 50000 ft)

PHYSICAL CHARACTERISTICS

Size			
Height		132 mm (4.9 in)	132 mm (4.9 in)
Width		325 mm (12.8 in)	325 mm (12.8 in)
Depth		285 mm (11.2 in)	285 mm (11.2 in)
Weight			
Net	(L)	10.5 kg (23.0 lbs)	9.5 kg (21 lbs)
	(H)	9.1 kg (20.0 lbs)	8.2 kg (18 lbs)
	(D)	10.0 kg (22.0 lbs)	8.6 kg (19 lbs)
Shipping	(L)	13.5 kg (32.0 lbs)	13.6 kg (30 lbs)
	(H)	13.2 kg (29.0 lbs)	12.3 kg (27 lbs)
	(D)	16.8 kg (37.0 lbs)	15.5 kg (34 lbs)

POWER REQUIREMENTS

Voltage (selected by rear panel switch)	86-127VAC 195-253VAC	86-127VAC 195-253VAC
Frequency	48-66 Hz	48-66Hz
Power	125W	125W

Equipment Supplied

The following equipment is supplied with each HP 9133/34 D,H and L product.

Description	Quantity	HP Part Number
AC Power Cord	1	Dependent on location
Operator's Manual	1	09133-90070

CAUTION

The HP 9133/34 D,H and L are precision instruments. Mechanical shock can misalign the READ/WRITE HEAD, resulting in READ ERRORS and/or DAMAGED DISCS whether the disc is operating or not.

Cleaning the Case

Refer to the operators manual supplied with the unit for complete instructions on cleaning procedures.

CAUTION

Chemical spray-on cleaners used for appliances and other household and industrial applications may damage the case finish. Do not use detergents that contain ammonia, benzenes, chlorides, or abrasives.

Installation

CHAPTER 2

Introduction

Refer to Installation chapter of the 9133/34 V and XV section of this manual for Installation information. Following is additional information which applies to the HP 9133/34D,H and L.

Controls and Indicators

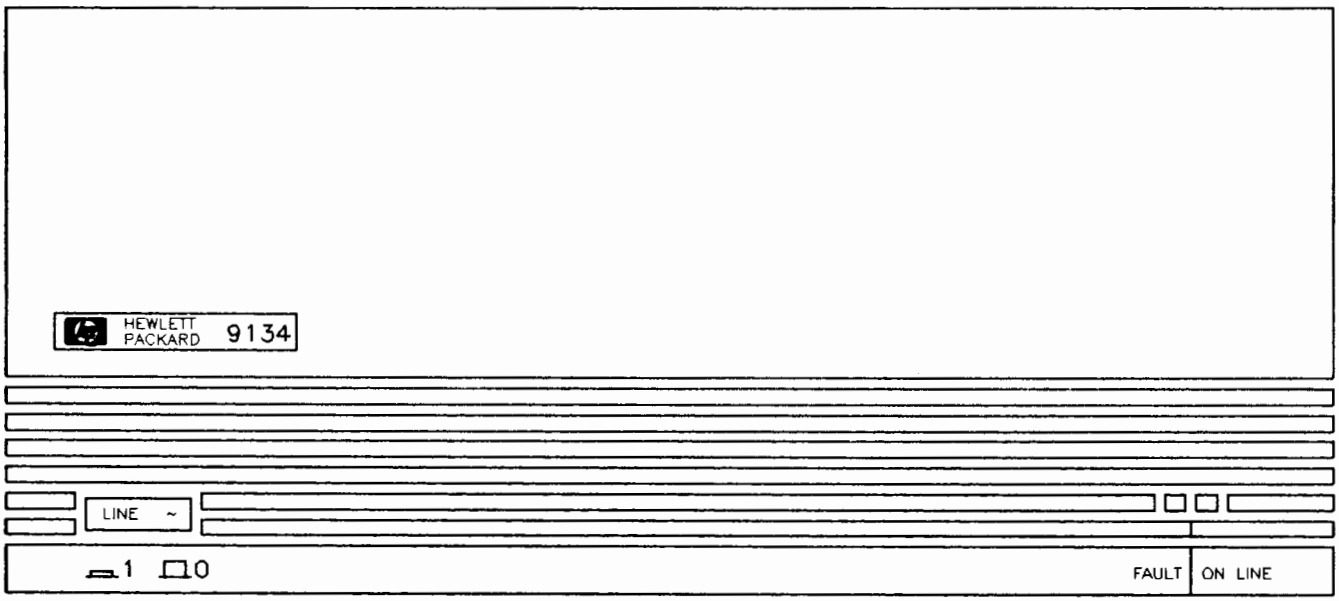

Figure 2-1. Front panel controls and indicators.

Figure 2-1 above shows the controls and indicators available on the front pannel of the HP 9133/34D,H and L. Figure 2-2 shows the location of switches which are used to configure the units.

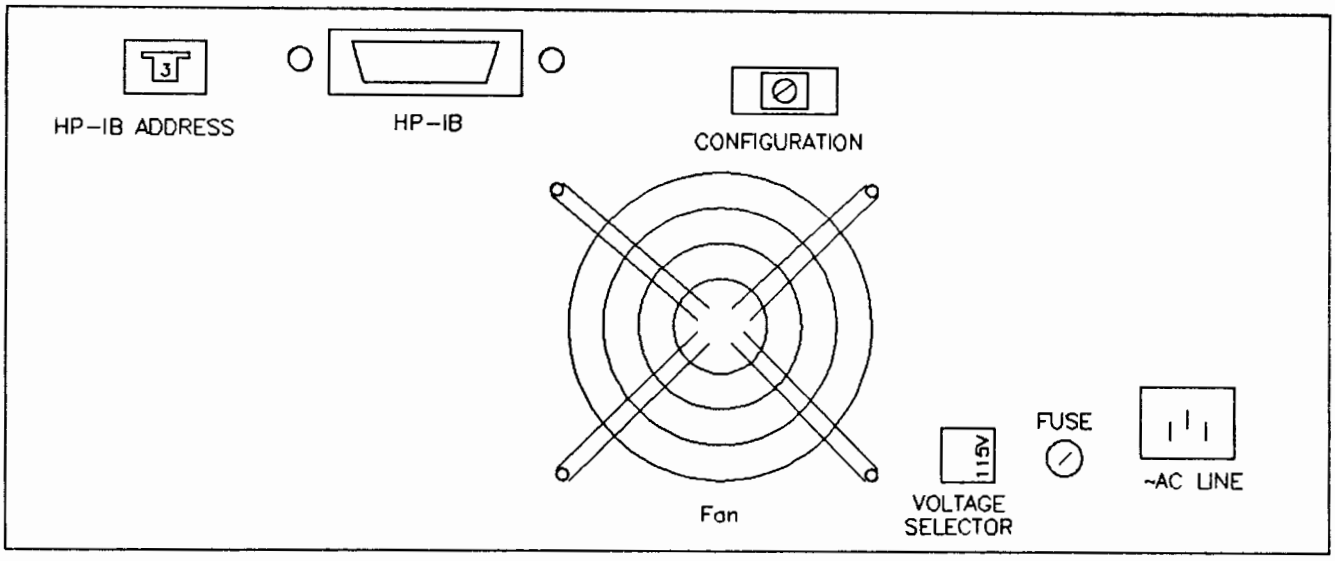

Figure 2-2. HP 9133/34 D,H and L rear panel.

Configuration

Volume Configuration (for series 200 systems only)

The HP 9133/34D,H and L hard discs can be divided into multiple volumes of different sizes. The following charts (Figures 2-3, 2-4 and 2-5), show the different selections available. The configuration setting refers to the setting of the configuration switch on the rear of the unit. See Figure 2-6 for internal unit configuration.

Config. Setting	Number of Volumes	Size of Volumes 256 bytes/sector	1024 bytes/sector
0	One	14.84 Mbyte/volume	16.64 Mbyte/volume
1	One	14.84 Mbyte/volume	16.64 Mbyte/volume
2	Two	7.37 Mbyte/volume	8.23 Mbyte/volume
3	Three	4.91 Mbyte/volume	5.47 Mbyte/volume
4	Four	3.64 Mbyte/volume	4.03 Mbyte/volume
5	One	12.29 Mbyte/volume	13.76 Mbyte/volume
	One	2.51 Mbyte/volume	2.76 Mbyte/volume
6	Six	2.41 Mbyte/volume	2.65 Mbyte/volume
7	One	9.83 Mbyte/volume	11.00 Mbyte/volume
	Two	2.46 Mbyte/volume	2.70 Mbyte/volume
8	Eight	1.77 Mbyte/volume	1.93 Mbyte/volume
9	One	7.32 Mbyte/volume	8.18 Mbyte/volume
	Three	2.46 Mbyte/volume	2.70 Mbyte/volume

Figure 2-3. Volume configuration settings (9133/34 D).

Config. Setting	Number of Volumes	Size of Volumes 256 bytes/sector	1024 bytes/sector
0	One	19.92 Mbyte/volume	22.33 Mbyte/volume
1	One	19.92 Mbyte/volume	22.33 Mbyte/volume
2	Two	9.92 Mbyte/volume	11.09 Mbyte/volume
3	Three	6.61 Mbyte/volume	7.37 Mbyte/volume
4	Four	4.49 Mbyte/volume	5.49 Mbyte/volume
5	Five	3.93 Mbyte/volume	4.34 Mbyte/volume
6	Six	3.27 Mbyte/volume	3.61 Mbyte/volume
7	Seven	2.81 Mbyte/volume	3.09 Mbyte/volume
8	Eight	2.45 Mbyte/volume	2.69 Mbyte/volume
9	One	19.92 Mbyte/volume	22.33 Mbyte/volume

Figure 2-4. Volume configuration settings (9133/34 H).

Config. Setting	Number of Volumes	Size of Volumes 256 bytes/sector	1024 bytes/sector
0	One	39.85 Mbyte/volume	44.74 Mbyte/volume
1	One	39.85 Mbyte/volume	44.74 Mbyte/volume
2	Two	19.90 Mbyte/volume	22.30 Mbyte/volume
3	Three	13.23 Mbyte/volume	14.79 Mbyte/volume
4	Four	9.91 Mbyte/volume	11.06 Mbyte/volume
5	Five	7.90 Mbyte/volume	8.80 Mbyte/volume
6	Six	6.59 Mbyte/volume	7.32 Mbyte/volume
7	Seven	5.65 Mbyte/volume	6.26 Mbyte/volume
8	Eight	4.91 Mbyte/volume	5.44 Mbyte/volume
9	drive split into two units, each of one volume		
	One	19.90 Mbyte/Volume	22.30 Mbytes/Volume
	One	19.90 Mbyte/Volume	22.30 Mbytes/Volume

Figure 2-5. Volume configuration settings (9133/34 L).

NOTE

For 9133L, 40 Megabyte Drive:

Configuration switch = 9 (2 units)

	Unit 0	Unit 1	Unit 2
HP-IB 0-7	hard disc	hard disc	flexible disc
HP-IB 8,9	flexible disc	hard disc	hard disc

Unit Configuration

The following figure shows the proper jumper settings for the type of hard disc used.

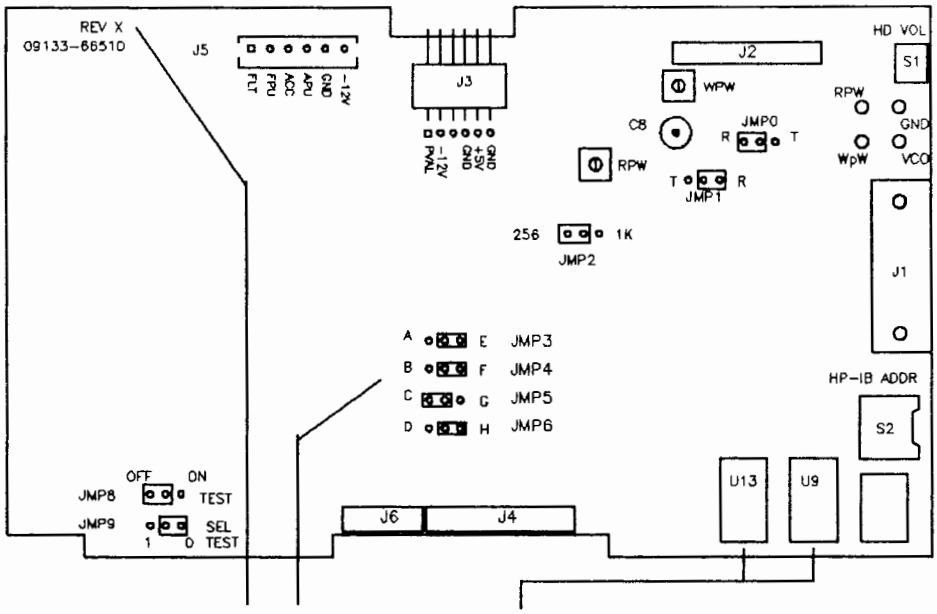

Product	S/N Prefix	Rev	JMP3–JMP6	Required Firmware
9133D	2419A/2511A	B	EFCH	Any 09133-8910X/-8920X
9133D	2419A/2511A	C	EFCD	09133-89105/-89205 and above
9133D	2513A and above	B	ABCH	09133-89105/-89205 and above
9133D	2513A and above	C	ABCD	09133-89105/-89205 and above
9134D	2425A	B	EFGH	Any 09133-8910X/-8920X
9134D	2425A	C	EFGD	09133-89105/-89205 and above
9134D	2514A and above	B	ABGH	09133-89105/-89205 and above
9134D	2514A and above	C	ABGD	09133-89105/-89205 and above
9133H	ALL	B	AFCH	09133-89105/-89205 and above
9133H	ALL	C	AFCD	09133-89105/-89205 and above
9134H	ALL	B	AFGH	09133-89105/-89205 and above
9134H	ALL	C	AFGD	09133-89105/-89205 and above
9133L	ALL	B	EBCH	09133-89108/-89208 and above
9133L	ALL	C	EBCD	09133-89108/-89208 and above
9134L	ALL	B	EBGH	09133-89108/-89208 and above
9134L	ALL	C	EBGD	09133-89108/-89208 and above

NOTE: JMP2 is shown in the position for a standard product.
Option 001 will have JMP2 in the 1K position.

Figure 2-6. Controller board configuration.

Fuses

The AC line fuse used in the HP 9133/34D,H and L products is for both 115 and 230Vac.

Interface Information

CHAPTER 3

Introduction

Refer to the HP 9133/34 V and XV section of this manual for interface information on the HP 9133/34D,H and L. Following is information which applies to the HP 9133/34 D,H and L.

Setting the HP-IB Address

Figure 3-1 shows the location of the HP-IB address switch. This is a thumbwheel switch with numbers 0 through 9. To select the proper address, turn the thumbwheel untill the number you want appears in the window.

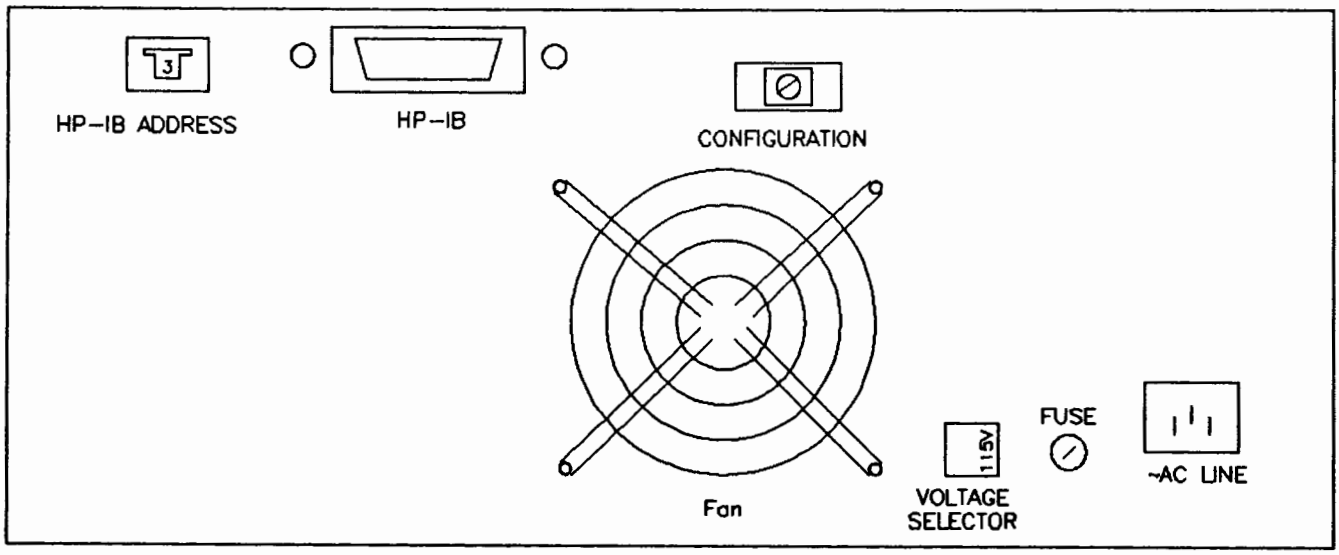

Figure 3-1. HP 9133/34D,H and L rear panel.

Troubleshooting

CHAPTER 4

Repair Philosophy

The 5 1/4-inch Winchester disc drive assembly is serviced on the exchange program. This includes the drive, and the drive electronics PCA. The 20 and 40 Mbyte drives are exchanged as complete assemblies.

The selftest procedures are given to help isolate problems in the field.

Controller assembly detailed information is not presented.

Exchange Assemblies

PART NUMBER	DESCRIPTION
40 Mbyte Winchester	-- 09133-69108
20 Mbyte Winchester	-- 09133-69106
15 Mbyte Winchester	-- 09133-69104
Winchester Drive Electronics	-- 09133-69105
Controller Board	-- 09133-69520

Non-Exchange Assemblies

Fan Assembly	-- 09133-68501
Winchester Disc Cntl Cable	-- 09133-61623
Winchester Disc R/W Cable	-- 09133-61624
Power Supply	-- 09133-67120
Fuse 3A 250V	-- 2110-0003

Selftest

HP 9133/34 D and H SELFTESTS

The selftest routines can be initiated in the following 3 ways:

1. **At Power-On**:A selftest of the processor, ROM, HP-IB chip, microprocessor RAM, and buffer RAM is performed. Read/Write tests are then performed on both drives, followed by spindle speed and ECC chip tests. (A disc must be inserted to test the 3 1/2-inch drive.)

2. **Host Computer Initiated**:The Diagnostic command from the host initiates the selftest routine that is performed at power-on.

3. **Switch/Jumper Selected**:The Test Jumper (JMP8) starts the test that is selected by the 4-bit HP-IB Address Switch and Select Test Jumper (JMP9). If JMP8 is left in the on position (0), the test will be

repeated. When JMP8 is taken out of the test position, the unit finishes the selected test, goes through the power-on sequence, and is then ready for HP-IB commands. Use Figure 4-3 for location of JMP8 and JMP9.

When a test is performed, the LED is first blinked once (to show that the LED works). If the test is successful, the LED blinks 5 times. If the test fails, the LED stays on for 5 seconds, and then goes off.

SELECTABLE SELFTESTS

NOTE

The RAM test (Test 0) will clear all RAM-loaded parameters, some of which are needed for other tests. Once the RAM test is performed, the RAM must be refreshed by powering the unit off, then on again in order to perform any of the other tests. The RAM test is repeatable without refreshing the RAM.

Tests other than the RAM Test can be selected randomly with the power on.

SELFTEST PROCEDURE

1. Select the desired test. Use the Selfest table in Figure 4-1 and the Test Description table in Figure 4-2.

2. Observe the LED. The unit will do all or part of the power-on selftest and will then start the selected test. When the test is completed, the selftest LED should blink 5 times. If it doesn't, the test failed.

3. Repeat steps 1 and 2 for any additional tests. Refresh the RAM (see the above note) if the RAM test was performed and a test OTHER THAN the RAM test is desired.

HP-IB ADDRESS SWITCH (S2)	SELECT TEST JUMPER (JMP9)	SELECTED TEST NUMBER
0	0	0
1	0	1
2	0	2
3	0	3
4	0	4
5	0	5
6	0	6
7	0	7
0	1	8
1	1	9
2	1	10
3	1	11
4	1	12
5	1	13
6	1	14
7	1	15

Figure 4-1. Selftest table.

SELFTEST SELECTION

LED Indications

Start 1. LED ON 4 seconds
2. LED OFF 0.5 seconds
3. LED ON during test

	TEST PASSES	TEST FAILS
4.	LED ON/OFF 5 times	LED stays ON.

NOTE

A disc must be in the drive to perform tests 4,6,8,10, and 12 (HP 9133 series only). Ensure that the disc is an unprotected and initialized scratch disc.

TEST DESCRIPTION

TEST	DURATION (s)	DESCRIPTION
0 RAM	35	All possible patterns are written in all locations of both RAMS.
1 ROM	10	A checksum calculation is performed.

2	HP-IB	10	Two of the registers on the HP-IB chip are written to and their contents verified.
3	FDC chip	10	Two of the registers on the FDC chip are written to and their contents verified.
4	Floppy Seek	10	Commands are given to the FDC to move the head on and off track 0. The track 0 indicator is checked to see that movement occurred.
5	Winchester Seek	10	Seek commands step the Winchester on and off cylinder 0 in order to test the track 0 indicator.
6	Floppy Speed	10	The head is stepped to track 35 and loaded. The period of the index pulse is measured and compared against the specification. No test is performed if there is no disc in the drive.
7	Winchester Speed	10	The spindle speed of the drive is checked and compared with the allowed range.
8	Floppy Write Verify	85	Every sector on the disc is written and the data is verified. All user data on the disc is lost.
9	Winchester Write Verify	25	All sectors on the selftest cylinder are written and read. Each byte including the ECC is checked. Error correction is also checked. No user data is affected.
10	Floppy Verify	45	All sectors in the data area of the disc are checked for CRC errors. No user data is affected.
11	Winch. Verify	330	All sectors in the data area of the disc are checked for CRC errors. No user data is affected.
12	Floppy Format	80	The disc is re-initialized with a 011 data pattern.
13	HDC Check	10	All read/write registers on the HDC chip are checked. HDC = Hard Disc Controller.
14	WD1100 Check	10	Writes data pattern to all registers with all combinations and verifies the data. Rev B controllers only.
15	WD1100 Buffer RAM	10	Tests the WD data buffer RAM (Rev B controllers only)

Figure 4-2. Test description table.

ADDITIONAL HINTS

If the unit does not respond to commands after power-on, the fault LED can be used to locate a failing section of the PCA. The LED will respond in one of the following ways:

- LED blinks off once every 6 seconds	ROM checksum is wrong
- LED blinks off 2 times/6 seconds	Processor ram is bad
- LED blinks off 3 times/6 seconds	Buffer ram is bad
- LED blinks off 4 times/6 seconds	Configuration jumpers A through H set wrong
- LED blinks off 5 times/6 seconds	8291 is bad
- LED on 6 seconds blinks off 6 times	6809 is bad

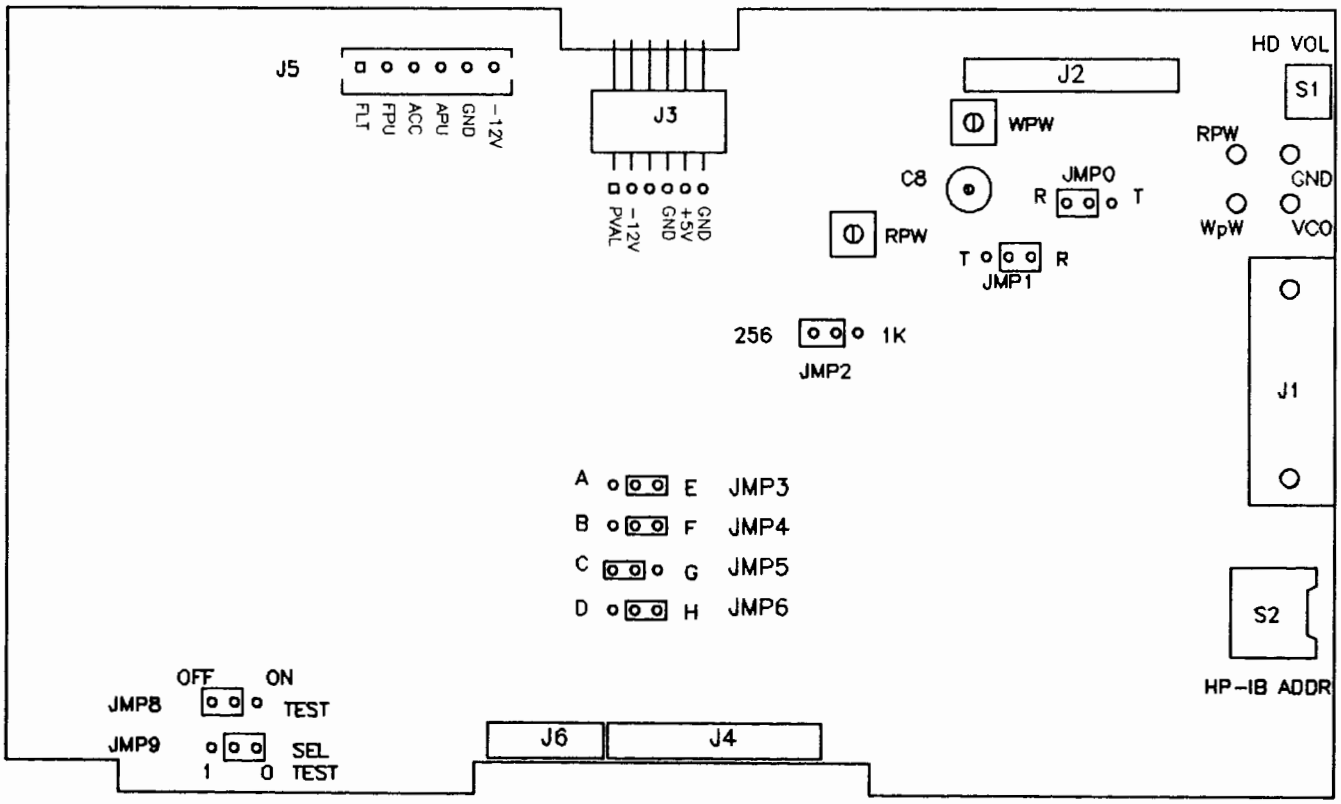

Figure 4-3. Controller jumper location.

Assembly Access

CHAPTER 5

Introduction

Refer to the 9133/34 V and XV section of this manual for Assembly Access information.

The following is additional information which pertains to the HP 9133/34 D,H and L.

Controller PCA Removal

To remove the controller board proceed as follows: (The procedure below assumes that you are facing the front of the unit.)

1. Detach cables J2 thru J6.
2. Remove the 3 mounting screws from the left side of the board.
3. Remove the HP-IB connector nuts from the rear of the chassis.
4. Lift the board clear of the chassis.
5. During reassembly, note that the board slides into lanced board guides on the right side of the chassis.

HP 9133/34H and L Drive Removal

The HP 9133/34H and L have a different mounting bracket for the Winchester drive assembly. Following is a list of part numbers that are associated with the bracket and drive. Figure 5-1 shows the bracket, drive and ground strap.

Bracket	09133-01203
Bracket screws	2360-0454
Ground strap	09133-61620 (H only)
Ground strap screws	
to bracket	0515-1085
to chassis	2360-0113

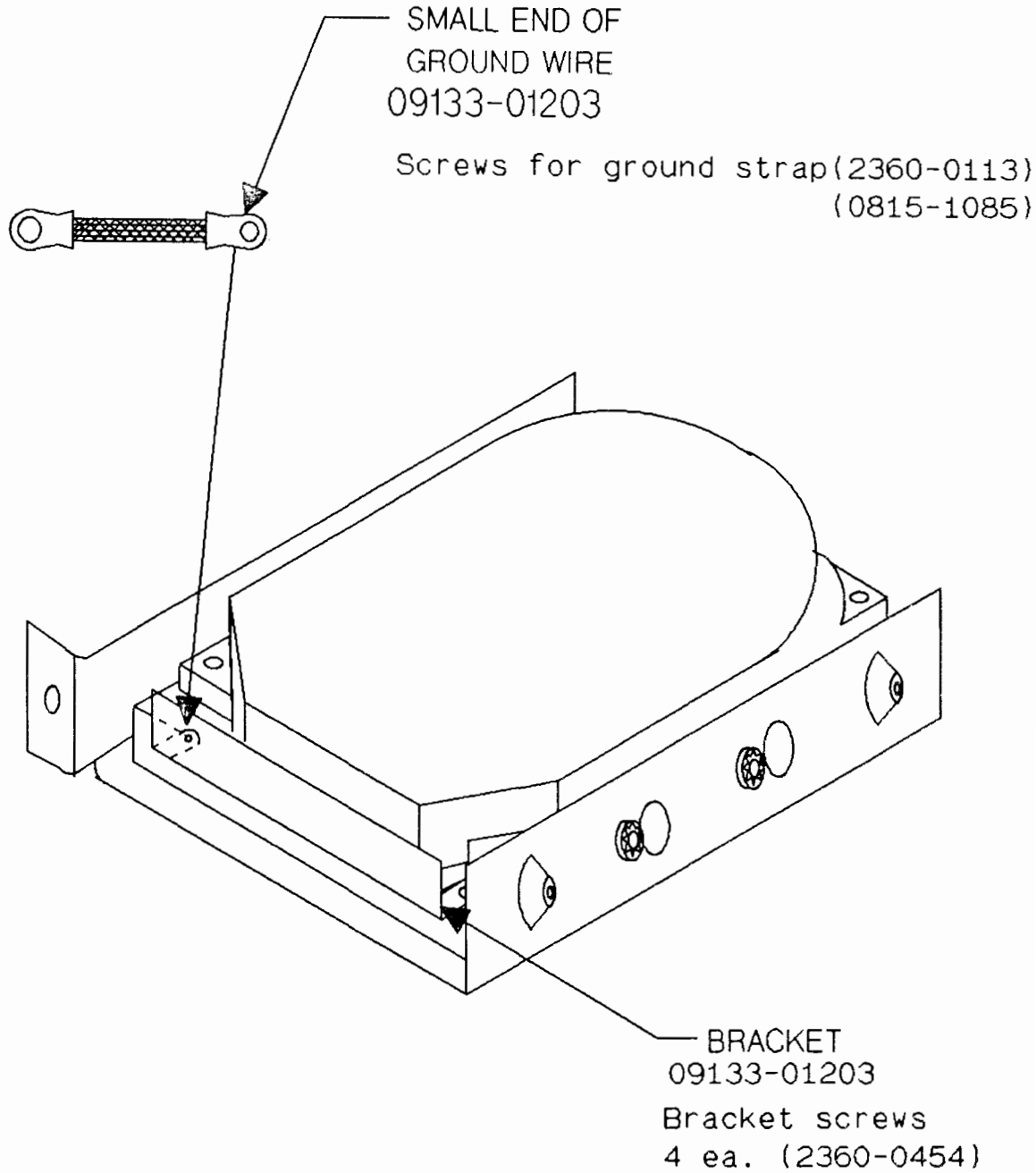

Figure 5-1. 9133H and L Winchester mounting bracket.

9133/34D,H and L PARTS LIST

LEVEL	REFERENCE DESIGNATOR	PART NUMBER	DESCRIPTION
1	A1	09133-69520	CONTROLLER PCA
.2	C8	0121-0552	C-V 7-60PF VAC
.2	C1-7,10-22,25,26, C28-30	0160-4571	C-F .1UF + 80
.2	C31	0160-4803	C-F 68PF 5% 100V
.2	C32	0160-4807	C-F 33PF 5%100V
.2	C37	0160-4809	C-F 390PF 5%
.2	C35,36	0160-4832	C-F .01UF 10%
.2	C38	0160-4833	C-F .022UF 10%
.2	C9,23	0160-4835	C-F .1UF 10% 50V
.2	C39	0160-5861	C-F 100 PF 1%
.2	C24	0180-0291	C-F 1UF 35V 10%
.2	C27	0180-1746	C-F 15UF 20V
.2	R14	0683-1015	R-F 100 OHM .05
.2	R13,15,16	0683-1035	R-F 10K .05 1/4W
.2	R5,6,7,22	0683-3615	R-F 360 OHM .5
.2	R9	0683-4725	R-F 4.7K .05
.2	R8	0698-3438	R-F 147 1% .125W
.2	R21,23	0698-3700	R-F .125W 715 1%
.2	R18	0757-0161	R-F 604 OHM 1%
.2	R17	0757-0274	R-F 1.21K 1%
.2	R1,3,20	0757-0280	R-F 1K 1% .125W
.2	R19	0757-0400	R-F 90.9OHM .01
.2	R11,12	0757-0437	R-F 4.75K 1%
.2	U9	09133-89105	PROM-1
.2	U13	09133-89205	PROM-2
.2	U29	1200-0817	SOCKET 40 PIN
.2	U9,13	1200-0861	SKT-IC 28-CONT
.2	J1	1251-7651	CN24 M AMP CHAMP
.2	J5	1251-8089	CN 6.100 ST HDR
.2	J6	1251-8681	20 PIN CONNECTOR
.2	J2	1251-8682	CN 26.1 SQ POST
.2	J4	1251-8683	CONNECTOR,34 PIN
.2	JMP1-JMP9	1252-0058	CN3.1 SQ POST
.2	JMP1-JMP9	1258-0141	JUMPER-REM
.2	RP1	1810-0083	NTWK-R 13X1K DIP
.2	RP3	1810-0182	NTWK-R24XMULTDIP
.2	RP2	1810-0235	NTWK-R15X2.2KDIP
.2	RP4	1810-0286	NTWK-R 15X10KDIP
.2	U57	1813-0067	XTAL-CLK-OSC
.2	U11	1813-0194	XTAL-CLK-OSC
.2	U55	1813-0346	DLAY LINE 60NSEC
.2	U4,17	1818-1611	IC-STATIC RAM
.2	U5	1820-0471	IC-SN7406N
.2	U37,58,59	1820-0621	TTL BUFF 7438N
.2	U63	1820-0693	IC SN74S74
.2	U19,23,49,53	1820-1112	IC SN74LS74AN
.2	U47,51	1820-1144	IC 74LS02

.2	U46	1820-1196	IC SN74LS174N
.2	U21,26,35,50	1820-1197	IC SN74LS00N
.2	U27,39	1820-1199	IC 74LS04
.2	U31,32,44	1820-1201	IC SN74LS08N
.2	U54	1820-1202	IC 74LS10N
.2	U24,43,25,34,45,48	1820-1208	IC 74LS32
.2	U38	1820-1216	IC SN74LS138
.2	U18	1820-1281	IC SN74LS139N
.2	U56	1820-1285	IC SN74LS54N
.2	U1,40	1820-1416	IC SN74LS14N
.2	U20,22	1820-1433	IC SN74LS164N
.2	U28	1820-1568	IC SN74LS125AN
.2	U30,41	1820-1730	IC SN74LS273N
.2	U61	1820-1782	IC 26S02
.2	U7,33,42	1820-2024	IC SN74LS244
.2	U8	1820-2075	IC SN74LS245N
.2	U15,16	1820-2096	IC SN74LS393N
.2	U62	1820-2203	IC AM26LS32PC
.2	U14	1820-2536	IC SN74LS352N
.2	U6	1820-2549	IC 8291AP
.2	U12	1820-2624	IC 68B09
.2	U64	1820-2749	IC AM26LS31PC
.2	U29	1820-3168	IC WD1010
.2	U52	1820-3318	IC SN74ALS273N
.2	U2	1820-3431	IC DS75160AN
.2	U3	1820-3513	IC DS75161AN
.2	U10	1820-3659	WD-2793-02 FDC
.2	U60	1820-3705	DP8460N-4
.2	CR1	1901-0050	SWITCHING DIODE
.2	R2,4	2100-3210	TRIMMER RESISTOR 10K 1%
.2	R10	2100-3874	VARIABLE RESISTOR 5K 10%
.2		2200-0107	SCREW 4-40
.2	S1	3100-1662	10 POSITION SWITCH
.2	S2	3100-1951	THUMBWHEEL SWITSH -10

FUSES

1	2110-0003	FUSE-3AMPS NB

EXCHANGE ASSEMBLIES

09133-69108	40 Mbyte WINCHESTER
09133-69106	20 Mbyte WINCHESTER
09133-69104	15 Mbyte WINCHESTER
09133-69105	WINCHESTER DRIVE ELECTRONICS
09133-69520	CONTROLLER PCA

NON-EXCHANGE ASSEMBLIES

09133-68501	FAN ASSEMBLY
09133-61623	DISC CONTROLLER CABLE

	09133-61624	DISC R?W CABLE
	09133-67110	POWER SUPPLY
	09133-08866	TOP COVER/SHIELD ASSEMBLY
	2110-0003	FUSE 3A 250V

MISCELLANEOUS PARTS

1	8120-1378	CABLE-POWER
1	0403-0427	BUMPER FOOT
1	0515-0825	SCR M4X.7 X8MM
1	0624-0458	SCR-TPG 8-16
1	0624-0525	SCR-TPG 10-14
1	07940-00026	FAN GUARD
1	09121-48303	FOOT-MOLDED
1	09133-00602	FRT SHIELD-33
1	09133-09100	SPRING-RETAINER
1	09133-20101	CHASSIS - 9133
1	09133-40201	FRT PNL- 9133
1	09133-40202	SWITCH SHAFT
1	09133-42501	LIGHT PIPE
1	09133-61606	LED/PWR CABLE
1	09133-61621	PWR HARNESS
1	09133-68501	FAN ASSEMBLY
1	09144-45404	POWER GUARD
1	1450-0625	LED HOLDER
1	5041-1203	POWER BUTTON

CASE PARTS

Drive Mounting Hardware

FLEXIBLE DISC DRIVE		WINCHESTER DISC DRIVE	
09133-01201	BRACKET	09133-01204	BRACKET
0515-1079	SCREW (BRACKET TO DRIVE)	2360-0113	SCREW (DRIVE TO BRACKET)
0515-1085	SCREW (BRACKET TO CHASSIS)	0511-1085	SCREW (BRACKET TO CHASSIS)
0515-1079	SCREW (CHASSIS TO DRIVE)		

Top Cover Mounting Hardware

3050-0010	FLAT WASHER
0515-0353	SCREW
0151-1085	SCREW

HP-IB Mounting Hardware

0380-1717	HEX STANDOFF
2190-0843	LOCK WASHER

Controller PCA Mounting Hardware

0515-1085	SCREW

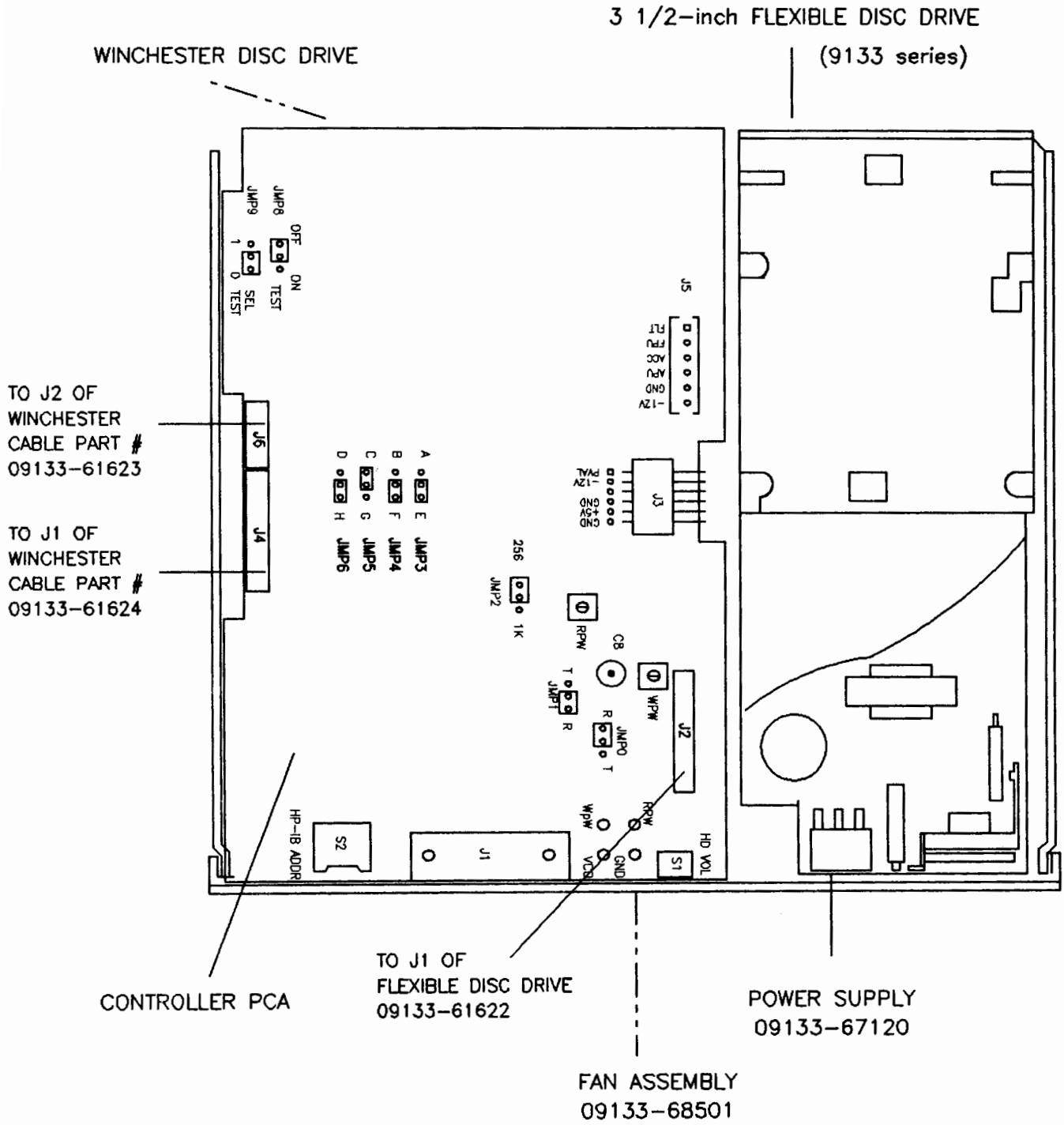

Location of Field Replaceable Assemblies (FRA)

Spare Manual
RL13227

SERVICE MANUAL

TS 2178

HP's 3 1/2-Inch Flexible Disc Drive Service Documentation

Computer Museum

Hewlett-Packard Greeley Division
700 71st Ave. Greeley, CO 80634

Table of Contents

Section I The 3 1/2-inch Disc Drive

Chapter 1 General Information

Introduction 1-1
Description 1-1
Maintenance and Handling 1-2
Disc Drive 1-2
Flexible Disc Media 1-2
Disc Guard and Auto Shutter 1-3
Initializing and Initializing Errors 1-3
Operating Cleanliness 1-4
Handling Flexible Disc Media 1-4
Write Protect 1-7
Media Monitor 1-7
Controls and Indicators 1-8
Front Panel 1-8
Rear Panel 1-8

Chapter 2 3 1/2-inch Drive Theory of Operation

Introduction 2-1
Electromechanical Components 2-2
Drive Mechanism 2-2
Read/Write Head 2-2
Head Positioning Mechanism 2-2
Drive Electronics 2-3
Input Signal Descriptions 2-3
Output Signal Descriptions 2-4
Drive Electronics Interface Timing 2-5
Controller Assembly 2-5
Interface Chip 2-6
Microprocessor 2-6
Flexible Disc Controller 2-7
Loop Management 2-7
Recording Format 2-7
Media 2-7
Tracks 2-8
Recording 2-8

Track Numbering 2-8
Track Format 2-8

Chapter 3 Assembly Access
Introduction 3-1
Main Cover Replacement 3-1
Front Panel Replacement 3-2
Load Pad Replacement 3-2
Drive Electronics Assembly Removal 3-4

Chapter 4 Selftests and Adjustments
Introduction 4-1
Selftests 4-1
Power-on Selftest 4-1
User Confidence Selftest (9121 Only) 4-2
Remote Selftest 4-2
Service Selftest 4-2
Adjustments 4-3
Equipment Required 4-3
Exerciser Tape 4-3
Head Cleaning 4-4
Motor Speed 4-4
Head Radial Alignment 4-5
Head Compliance 4-7
Load Pad Position and Head Load Force 4-7
Read Amplifier Gain and Offset 4-9
Other Checks 4-11
Amount of Disc Access 4-11
PLL Free-run Frequency 4-12

Section II 9121D/S

Chapter 1 General Information
Introduction 1-1
Product Description 1-1
Technical Specifications 1-2
Equipment Supplied 1-4
Unpacking Your HP 9121D/S Disc Memories 1-4
Cleaning the Case 1-5

Chapter 2 Installation
Introduction 2-1
Setting the Line Voltage Select Switches 2-1
Fuses 2-2
Power Cords 2-2
The HP-IB Interface 2-3
Selecting the Device Address 2-4
Controls and Indicators 2-5
Applying Power 2-5

Loading the Flexible Disc 2-6
Manual Shutter 2-6
Auto Shutter 2-6
Basic System Operation 2-6
Write Protect Error On Initialization 2-7
Data Errors 2-7

Chapter 3 Interface Information
Introduction 3-1
Overview of the HP-Interface Bus 3-1

Chapter 4 Troubleshooting
Introduction 4-1
Repair Philosophy 4-1
Exchange Assemblies 4-1
Non-exchange Assemblies 4-1
Support Packages Contents Lists 4-2
Product Support Package (PSP) 4-2
Field Support Inventory Package (FSI) 4-2
Recommended Field Support Inventory 4-2
Controller Electronics and Power Supply Assembly 4-2
Power Supply 4-2
Troubleshooting the Power Supply 4-4

Chapter 5 Assembly Access
Introduction 5-1
Safety Considerations 5-1
General 5-1
Safety Symbols 5-1
Safety Earth Ground 5-2
Before Applying Power 5-2
Servicing 5-2
Top Cover Removal 5-4
Drive Removal 5-4
Fan Removal 5-5
Printed Circuit Assembly Removal 5-5
9121D/S Parts Lists 5-5

Computer Museum

Section III HP 9133A/B Disc Memories

Chapter 1 General Description
Introduction 1-1
Product Description 1-1
Technical Specifications 1-2
Equipment Supplied 1-3
Unpacking Your HP 9133A Disc Memory 1-4
Cleaning the Case 1-4

Chapter 2 Installation

Introduction 2-1
Setting the Line Voltage Select Switches 2-1
Fuses 2-1
Power Cords 2-2
Interfacing the HP 9133A to Your System 2-2
Selecting the Device Address 2-2
The HP-IB Interface 2-3
Controls and Indicators 2-4
Applying Power 2-5
Loading and Unloading the Flexible Disc 2-5
Manual Shutter 2-5
Auto Shutter 2-5
Basic System Operation 2-6
Write Protect Error On Initialization 2-6
Data Errors 2-6

Chapter 3 Interface Information

Introduction 3-1
Overview of the HP-Interface Bus 3-1

Chapter 4 Troubleshooting

Introduction 4-1
Repair Philosophy 4-1
Exchange Assemblies 4-1
Support Packages Contents Lists 4-2
Product Support Package (PSP) 4-2
Field Support Inventory Package (FSI) 4-2
Recommended Field Service Inventory 4-2
Controller Assembly 4-2
Power Supply 4-2

Chapter 5 Assembly Access

Introduction 5-1
Safety Considerations 5-1
General 5-1
Safety Symbols 5-1
Safety Earth Ground 5-2
Before Applying Power 5-2
Servicing 5-2
Top Cover Removal 5-2
Controller Assembly Removal 5-4
Sheet Metal Housing Removal 5-4
Drive Removal 5-5
HP 9133 Parts Lists 5-6

Section IV HP 9133V and 9133XV Disc Memories

Chapter 1 General Description

Introduction 1-1

Product Description 1-1
Technical Specifications 1-2

Chapter 2 Installation
Introduction 2-1
Setting the Line VOLTAGE SELECT Switch 2-1
Fuse 2-2
Power Cords 2-2
Interfacing to Your System 2-3
Selecting the Device Address 2-3
The HP-IB Interface 2-4
HP-IB Interface Restrictions 2-4

Chapter 3 Basic Operating Procedures
Introduction 3-1
Drive Operation 3-1
Controls and Indicators 3-1
Power-on Selftest 3-2
User Confidence Selftest (Flexible Disc Drive) 3-3
Additional Flexible Disc FAULT Indications 3-3
Initial Power-on and Operating Procedure 3-3
Initial Checkout 3-4
Flexible Disc Procedures 3-4
Flexible Disc Description and Write Protection 3-4
Write Protect Error on Initialization 3-5
Inserting and Removing the Flexible Disc 3-5
Media Monitor 3-6
Media Wear Indication 3-6

Chapter 4 Troubleshooting
Introduction 4-1
Repair Philosophy 4-1
Exchange Assemblies 4-1
Support Packages Contents Lists 4-1
Product Support Package (PSP) – 09121-67100 4-1
Field Inventory Parts Package (FSI) – 09121-67197 4-2
Reccommended Field Service Inventory 4-2
Controller Assembly 4-2

Chapter 5 Assembly Access
Introduction 5-1
Safety Considerations 5-1
General 5-1
Safety Symbols 5-1
Safety Earth Ground 5-2
Before Applying Power 5-2
Servicing 5-2
Assembly Designations 5-4

Top Cover Assembly Removal 5-4
Front Panel Assembly Removal 5-4
Controller PCA Removal 5-5
3 1/2-Inch Drive Removal 5-6
Field Replaceable Units 5-6
Parts List 5-6

Appendix A
Introduction A-1
Command Compatibility A-2
9121D/S and HP82901/2 Compatibility A-2
Command Sequences A-2
Parallel Poll Response A-3
Cylinder and Track Numbering A-3
Target Addressing A-4
The D Bit A-4
Holdoffs A-5
Commands A-6
Command Table A-6
Sense Commands A-7
Identify A-7
DSJ A-8
Read Selftest Results A-8
Read Loopback Record A-9
Request Status A-10
Request (Logical) Disc Address A-14
Request (Physical) Disc Address A-15
Send Wear A-16
Control Commands A-17
Universal Device Clear A-17
HP-300 Clear A-18
Initiate Selftest A-19
Write Loopback Record A-20
Download A-20
Seek A-21
End A-23
HP-IB CRC Secondary A-23
Disc Read Commands A-24
Buffered Read A-24
Unbuffered Read A-26
Verify A-27
Buffered Read Verify A-28
Unbuffered Read Verify A-29
Cold Load Read A-30
Disc Write Commands A-31
Buffered Write A-31
Initialize A-33
Format A-35

Section I
The 3 1/2-inch Disc Drive

Update for 9133V/XV Disc Memory

Section I of this manual applies to the 3 1/2-inch disc drive in the HP 9133V/XV with the following exceptions and changes.

1. Page 4-1 under Selftests

   See Section IV page 3-3 for a description of the User Confidence Selftest and selftest indications.

2. Page 4-5 paragraph 2

   The frequency counter may also be connected to the 'INDEX' test point on the controller assembly in the 9133V/XV. See page 4-2 in Section IV for the location of this test point.

3. Page 4-5 under 'Head Radial Alignment'

   Oscilloscope connections may also be made to test points on the controller assembly in the 9133V/XV. See page 4-2 in section IV for test point locations.

   Channel B: Connect to the 'INDEX' test point

4. Page 4-9 under 'Read Amplifier Gain and Offset'

   Oscilloscope connections may also be made to test points on the controller assembly in the 9133V/XV. See page 4-2 in Section IV for test point locations.

   Channel A: Connect to the 'READ DATA' test point

5. Page 4-12 under 'PLL Free-Run Frequency'

   Connect the frequency counter to pin 26 of U20 on the 09133-69509 PCA on the controller assembly in the 9133V/XV. Adjust R27 to adjust the frequency if necessary.

Chapter 1
General Information

Introduction

This manual describes the operation, maintenance, and repair of HP's 3 1/2-inch disc drive. The disc drive module is used as the kernel of this manual. Care, maintenance, adjustments, and repair of this module are covered in the first section.

The 3 1/2-inch disc drive is used in several products, such as, the 9121D/S, the 9133A, etc. These different configurations and associated components are explained in their respectively tabbed sections.

The following topics are discussed in this chapter:

- Description
- Maintenance and Handling
  - Disc Drive
  - Flexible Disc Media
  - Disc Guard and Auto shutter
  - Initializing and Initializing Errors
  - Operating Cleanliness
  - Handling Flexible Disc Media
  - Write Protect
  - Media Monitor
- Controls and Indicators
  - Front Panel
  - Rear Panel

Description

The 3 1/2-inch Disc Drive is HP's new Micro Flexible Disc Drive. This drive offers extreme compactness and is lightweight, 4.0 inches wide, 2.0 inches high, 5.1 inches deep, and weighs just 1.5 lbs.

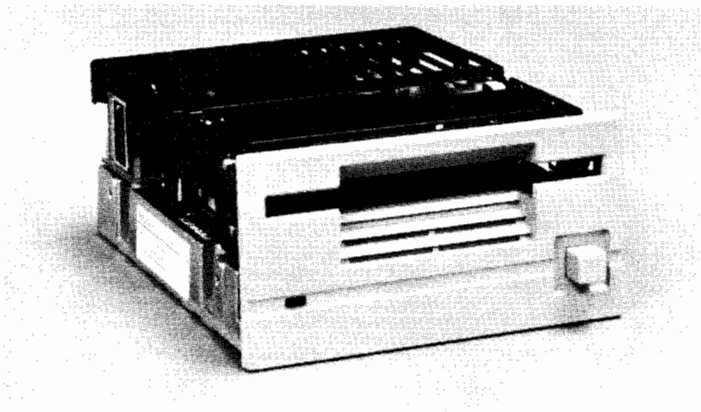

Figure 1-1. The HP 3 1/2-inch Disc Drive

Maintenance and Handling

Disc Drive

The HP 3 1/2-inch Disc Drive does not require regular maintenance. However, the load pad will wear out over a period of time and must be replaced. This is a complicated process and should only be attempted by a trained service person. The maintenance schedule for the load pad depends upon the use of the drive. A normally used drive requires head load pad replacement every 5 years; whereas, a heavily used drive requires the replacement every 1 to 2 years.

The terms used above (normally and heavily) refer to head/media contact time or the time the front panel LED is on. Normally refers to useage of less than 20 minutes a day; whereas, used heavily refers to use of more than 2 hours a day.

Load pad replacement is described in the "Assembly Access" section. The load pad adjustment along with other important adjustments are described in "Selftest and Adjustments".

The performance and life of the flexible disc read/write head and the flexible disc media depend directly on how carefully they are handled.

Be sure to follow the disc care and handling guidelines presented on the following pages and the operating environment restrictions presented in the Specifications Section.

Flexible Disc Media

The removable storage medium used in the 3 1/2-inch Disc Drive is a flexible mylar disc coated with a thin layer of magnetic oxide. The disc is enclosed in a protective plastic jacket with a slot for head access to the recording surface. The rigid plastic shell provides extra protection and reduces disc-to-case friction (see Figure 1-2). A metal centering hub ensures rapid and accurate positioning when the disc is inserted in the drive.

Each disc may contain 286 Kbytes of formatted data. Since some storage is used for a directory, the exact amount available for user storage depends upon the controller and the number of files stored. Refer to the appropriate computer mass storage programming or reference manual for details.

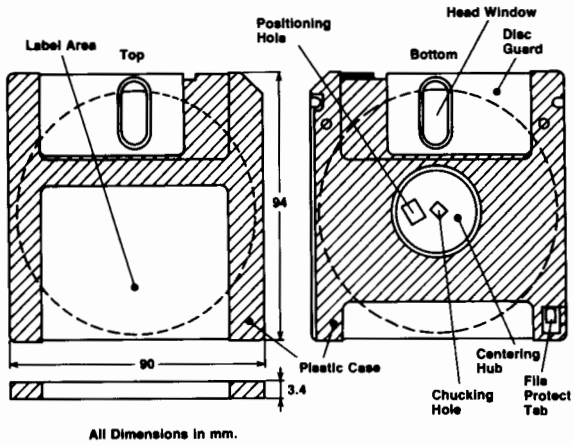

Figure 1-2. The Micro-Flexible Disc

Disc Guard and Auto Shutter

The disc guard which slides back and forth across the front of the disc protects the recording surface from foreign object contamination. This guard must be positioned exposing the disc to read or write data onto the disc.

Some of the drives feature the "Auto Shutter" which automatically opens and closes the guard as the disc is inserted and removed from the drive. The drives with the Auto Shutter require the spring loaded disc guard for proper operation of the Auto Shutter. However, either disc type (spring loaded or manually operated disc guard) will work in either type of disc drive.

A field upgrade kit adding the auto shutter is available under P/N 09121-88875.This kit contains the auto shutter mechanism and instructions for installation and alignment.

Initializing and Initializing Errors

Each flexible disc must be initialized before it can be used for data storage. The initialization procedure marks each disc sector, checks for defective tracks, and establishes file directories.

Note

Before the head comes in contact with the medium to initialize a new disc, the motor speed is checked. The motor speed must be within a specified tolerance before the disc is initialized. If the tolerance is not met, a write protect error is given and the disc is not initialized. Discard the disc as its spinning friction is too high.

The motor speed should be checked and/or adjusted before discarding the disc. See the section titled "Selftest and Adjustments".

Refer to your computer programming or reference manual for the correct initialization procedure.

CAUTION

DISC DRIVE PERFORMANCE AND RELIABILITY ARE DEPENDENT ON THE TYPE OF MEDIA USED. DISC DRIVE SPECIFICATIONS CAN BE ASSURED ONLY WHEN USING HP MEDIA. THE USE OF IMPROPER MEDIA CAN RESULT IN PREMATURE DISC FAILURE OR DAMAGE TO THE DISC DRIVE.

ON SOME DISC PRODUCTS, HP MAY QUALIFY OTHER NON-HP MEDIA. WHEN TESTED, THIS MEDIA MET HP SPECIFICATIONS. HOWEVER, HP DOES NOT WARRANT OR SUPPORT THIS MEDIA AND CANNOT CONTROL CHANGES IN ITS SPECIFICATIONS OR QUALITY. THE SELECTION AND USE OF SUCH PRODUCTS IS THE CUSTOMER'S RESPONSIBILITY. HP RESERVES THE RIGHT TO EXCLUDE FROM WARRANTY AND MAINTENANCE AGREEMENT COVERAGE ANY REPAIRS WHICH HP REASONABLY DETERMINES OR BELIEVES WERE CAUSED BY THE USE OF MEDIA NOT PROVIDED BY HP. HP WILL UPON REQUEST PROVIDE SUCH REPAIRS ON A TIME AND MATERIAL BASIS.

WARRANTY AND MAINTENANCE AGREEMENT COVERAGE OF REPAIRS NOT CAUSED BY THE USE OF NON-HP MEDIA IS UNAFFECTED.

Operating Cleanliness

The critical elements involved in the read/write process are shown in Figure 1-3. The read/write head must maintain contact with the disc during read and write operations. Also shown are various types of contaminants and their size relationships. A contaminant particle hard enough and of the right size may scratch the media oxide coating or the head surface. Even if not hard enough to scratch, it may be large enough to lift the head from the surface, causing data errors or damage to the media.

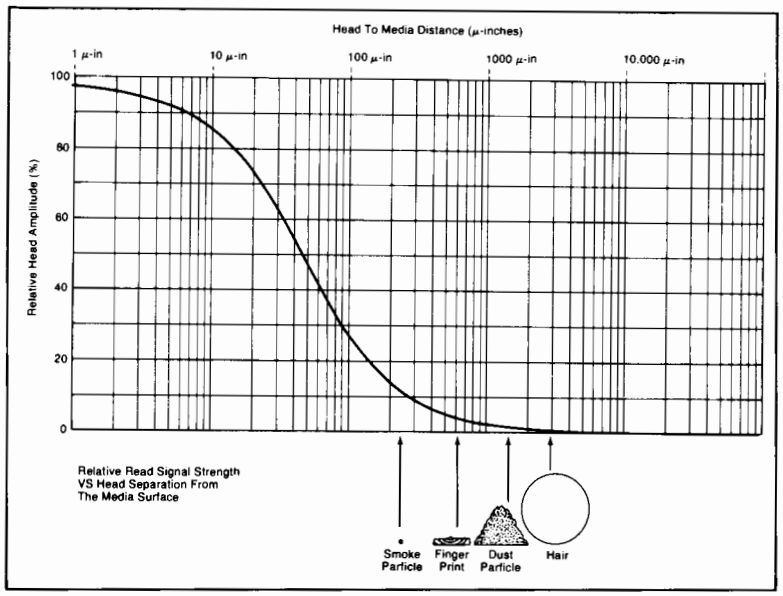

Figure 1-3. Head/Media Critical Elements

Handling Flexible Disc Media

The flexible disc is basically maintenance free, but it is delicate and MUST BE HANDLED CAREFULLY. Remember, the disc contains your valuable data and programs, and should be treated accordingly. A good rule of thumb is to treat your disc as you would a valuable record album. Here are some specific Do's and Don'ts to avoid loss of data or damage to your discs.

EVEN A LITTLE CARELESSNESS IN DISC HANDLING CAN DRAMATICALLY REDUCE THE LIFE OF THE DISC.

Do's

Back Up Discs Frequently

There is always a chance of losing data when mass storage devices are accessed. There are many causes in any computer system - a programming bug, operator error, power failure, or hardware failure. In the case of flexible discs, additional conditions must be considered - media failure from contamination or wearout. ONE SURE PROTECTION AGAINST DATA LOSS IS FREQUENT BACKUP OF YOUR FILES.

Use A Felt Tip Pen To Label Your Disc

Use a soft felt tip pen to label your disc, and be careful to write only in the label area.

Replace Discs Frequently

Although discs are designed to provide many hours of useful life, they will eventually wear out. The life of a disc is VERY dependent on how carefully it is handled and how much it is used.

The following guidelines refer to head/media contact time or the time the front panel LED is on. The terms use here (normally and heavily) also refer to load pad replacement mentioned earlier in this section. A disc used normally (less than 20 minutes a day) should last half a year. A disc that is used heavily (more than 2 hours a day) should not be expected to last more than 2 months. Discs should be replaced whenever they begin to show signs of circular marring. See the following section titled "Media Monitor".

Don't

Do Not Touch The Surface Of The Disc

The thickness of a fingerprint is enough to lift the head off the disc and cause errors. The oils in a fingerprint will also collect dust which can cause a disc to wear out sooner than it normally would.

Do Not Bend Or Fold The Disc

The disc is flexible but will not operate if it is creased. Using ball point pens, rubber bands, paper clips, etc. can crease the disc or damage the plastic case.

Do Not Try To Clean A Disc

The inside surface of the disc jacket is covered with a special material that cleans the disc as it rotates. Any other method of cleaning may cause solvent damage to the media or scratch the disc, causing loss of data. If a disc becomes dirty or scratched, immediately transfer the data to a new disc and discard the old disc.

Slide the Disc Guard Over The Head Window When Not In Use

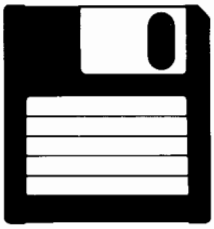

This is the single most important thing to remember about handling your disc because it prolongs disc life by protecting it from dust, finger prints, and scratches. NEVER ATTEMPT TO BLOW DUST FROM THE DISC, the lubrication contained in the plastic jacket also serves to keep the disc clean. Between uses discs should be stored upright in a dust free container. The box in which the discs are shipped, or a similar container, is a good choice.

Operate Your System In A Clean Environment

Airborne contaminants and particles accidently dropped onto the disc will cause your disc to wear out prematurely and may cause unreliable data storage and retrieval operations. Some of the most common contaminants are DUST, SMOKE, ASHES, ERASER CRUMBS, and BREADCRUMBS. NEVER ATTEMPT TO BLOW SMALL PARTICLES FROM THE DISC. Chemical vapors may also cause premature wearout.

Maintain Proper Temperature And Humidity

The proper operating range is 10° C (50° F) to 45° C (115° F) and 20% to 80% relative humidity. While temperature is usually easy to control, it may be necessary to make special provisions to keep the humidity in the proper range. Although the disc will continue to operate outside the normal humidity range, it will wear out more quickly and will have a higher error rate.

Avoid Magnetic Fields

The data is stored on the disc magnetically, and can be erased by an external magnetic field. Avoid placing a disc near power transformers, magnets, large disc memories or motors.

Remove Disc From Drive When Not In Use

Remove the disc completely from the drive when access is not needed for an extended period of time.

Write Protect

The micro-flexible disc is write unprotected when you receive it. To prepare the disc for write protected operation do the following (see Figure 1-4):

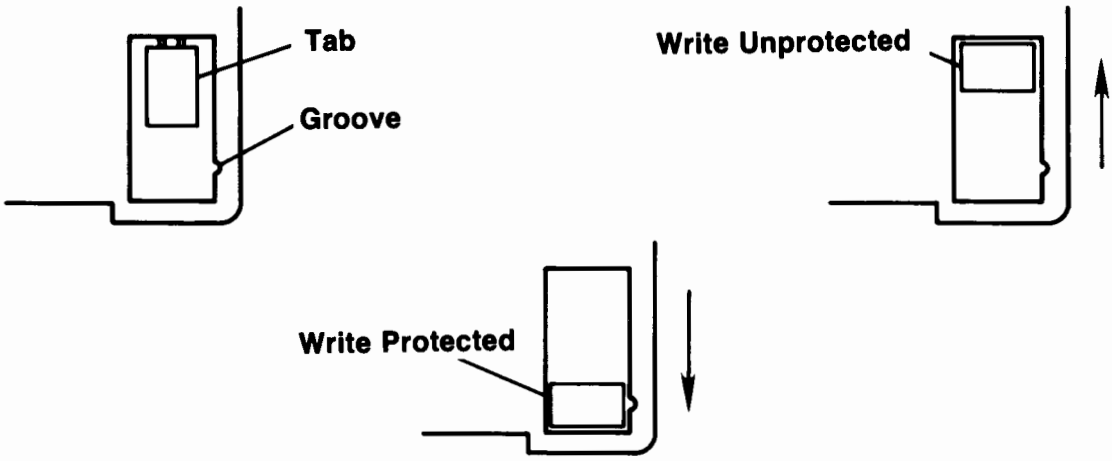

Figure 1-4. Disc Write Protect

1. Score the attachment point of the write protect tab with a sharp object
2. Break off the write protect tab
3. Align the protrusion on the tab with the groove in the disc
4. Depress the tab into the groove - tab should fit snugly

Write protection is accomplished by sliding the tab away from the center of the disc.

Media Monitor

As the flexible disc becomes worn, the friction between the disc and the read/write head increases. Because the same read/write head accesses the data from all your discs, it is very important that this friction be kept to a minimum level. To insure long wear life of the read/write head, you should make the following visual media check each time you insert a disc into your drive.

Checking for disc wear is a simple visual inspection of the disc surface before you insert the disc into the drive. When viewing the disc surface you should look for any signs of circular marring. This is done by sliding open the disc guard revealing the disc surface. If you see any sign of circular marring on either side of the exposed surface, the disc should be immediately copied and discarded. Circular marring generally occurs first on the upper (label side) surface of the disc.

A good disc should always reflect a hatchmark type of pattern. Compare a new (never used) disc to a disc you have used for a few hours. There should be no visible difference.

An internal test has been implemented to provide you with an upper limit indication for disc use. When a disc reaches this limit, the head loaded indicator (front panel LED) blinks on and off. This indication is continued until you remove the disc or until the host computer sends a command to the drive. The drive accepts and performs the command from the host, after

which it resumes the disc "worn out" indication. AT THIS TIME, YOU SHOULD COPY YOUR DATA TO ANOTHER DISC. If the use of this disc is not discontinued, the disc will eventually be write-protected. If this "auto" write protected disc is ejected and reinserted into a drive, it will be un-write protected for a short period of time, after which the "worn out" indication will start again and the disc will again be write protected.

Visually inspecting the disc prior to inserting it into the drive and taking the appropriate action when you receive the "worn out" indication will insure the long life of the read/write head.

Controls and Indicators

Front Panel

The disc eject button is used to remove a disc from the drive. Depression of this button ejects the disc. See the following figure.

The activity light indicates that the read/write head is loaded and a read or write operation is in effect. DO NOT PRESS THE DISC EJECT BUTTON WHEN THE ACTIVITY LIGHT IS ON.

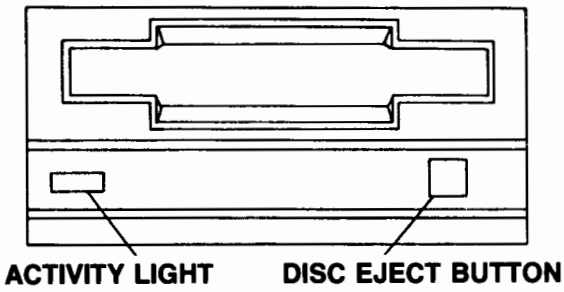

Figure 1-5. Front Panel Controls

Rear Panel

The drive select switch SW1 is located at the rear of the drive. This switch designates drive 0 or drive 1 depending on its setting. See Figure 1-6 for location and switch settings.

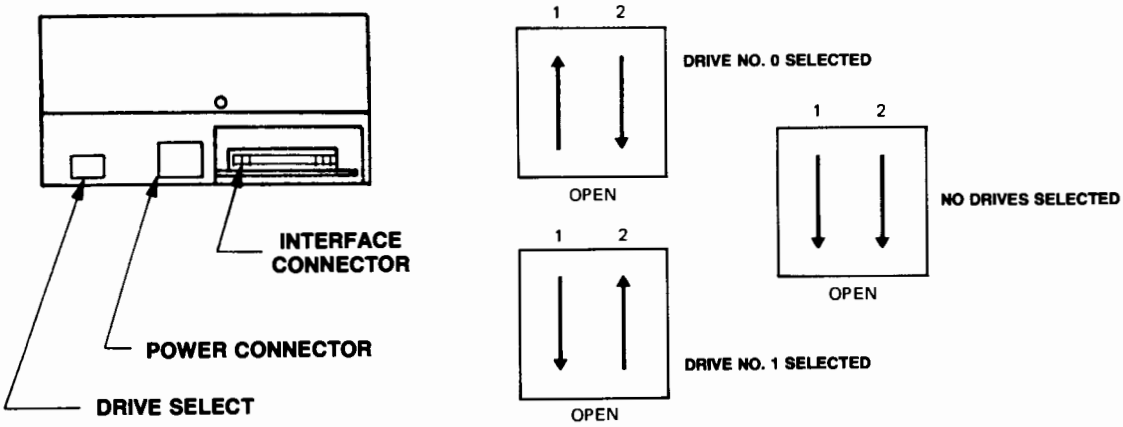

Figure 1-6. Drive Select Switch

Chapter 2
3 1/2-inch Drive Theory of Operation

Introduction

A complete disc drive peripheral consists of a power supply, controller electronics assembly, drive electronics assembly, and drive electromechanical components. See Figure 2-1.

HP's 3 1/2-inch Disc Drive appears in various packaging and configurations (9121D/S, 9133A, etc). In these configurations, the drive electronics and electromechanical components remain the same. The controller electronics assembly and power supply are totally different in appearance. For this reason, the actual controller assembly (limited information) and power supply for each configuration are presented under the tabbed section. Since the controller assembly theory of operation must be the same to operate the same drive it is presented here with the drive electronics and electromechanical components.

Here are the topics discussed in this chapter:

- Electromechanical Components
  - Drive Mechanism
  - Read/Write Head
  - Head Positioning Mechanism
- Drive Electronics
  - Input Signal Description
  - Output Signal Description
  - Drive Electronics Interface Timing
- Controller Assembly
  - Interface Chip
  - Microprocessor
  - Flexible Disc Controller
  - Loop Management
- Recording Format
  - Media
  - Tracks
  - Recording
  - Track Numbering
  - Track Format

Figure 2-1 represents the mechanical and electrical components of a disc drive.

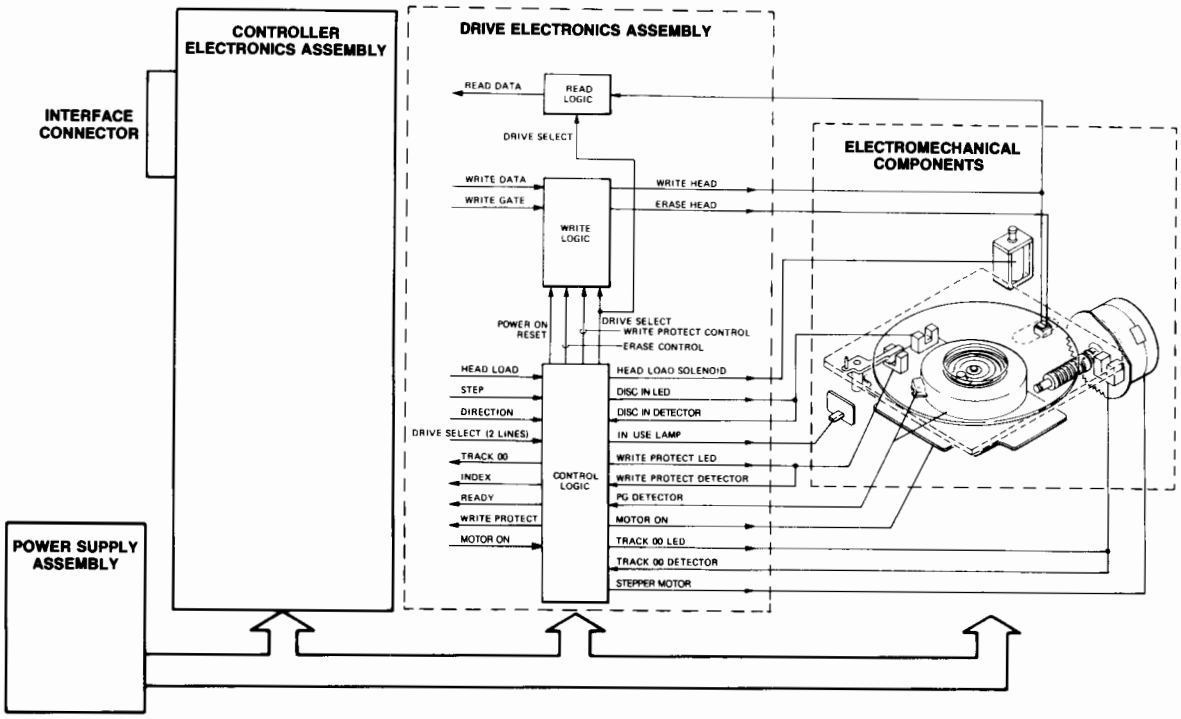

Figure 2-1. Drive Components and Assemblies

Electromechanical Components

The electromechanical components of the drive consists of a drive mechanism, read/write head, a head positioning mechanism, and control interlocks.

Drive Mechanism

The drive mechanism is composed of a long life brushless DC motor. The rotating speed of the motor is 600 rpm which requires 1 second starting time. The index pulse (sensor mounted to the side of the motor) is generated using a photo sensor and Hall Effect sensor combination. Disc rotation is achieved via a spring loaded bearing (attached to the motor) that fits into a receiving portion of the metal centering hub on the disc. This metal centering hub also ensures excellent track positioning accuracy with little wear.

Read/Write Head

The read/write head is a single-element ceramic device with tunnel erase elements to provide erase areas between the tracks. The head is mounted on a carriage assembly that is positioned by a stepper motor. The flexible disc is inserted through the disc access door on the front of the disc drive. During a read/write operation, the head is in direct contact with the flexible disc.

Head Positioning Mechanism

A mechanism that includes a stepper motor and needle screw positions the read/write carriage assembly to the flexible disc. The stepper motor, driven by pulse signals from the drive PCB, increments the head one track per three pulses. The HP-IB channel supplies the controller PCB with head positioning commands which in turn supplies positioning data to the drive PCB.

Drive Electronics

The drive electronics includes read and write circuits, control circuits for head positioning, and read, write, and erase enabling circuits.

The drive electronics circuitry is contained on the drive PCB which is attached to the bottom of the disc drive frame. The drive PCB is connected between the controller PCB and the various electromechanical components of the disc drive thereby providing the necessary interface for disc drive operation. The drive PCB recognizes when the disc drive is selected and initiates the proper head positioning actions. For write operations, the drive PCB turns on write and erase current generators and provides the correct write current transitions. During read operations, data obtained from the flexible disc is amplified, conditioned, and sent to the controller PCB. The drive PCB also contains interlock circuits that prevent drive write operations if the flexible disc is write protected. In addition, the drive PCB makes available status information.

The drive has 13 interface signals going to and from the Drive Electronics assembly. Eight of these signals are input to the drive, and five signals are output from the drive. These signals are listed next:

Input Signals to the Drive Electronics Assembly and Pin Numbers

Drive Select (two lines)	2,4
Direction Select	6
Step	8
Head Load	14
Write Data	10
Write Gate	12
Motor On	1

Output Signals from the Drive Electronics Assembly and Pin Numbers

Index	18
Track 0	20
Write Protect	22
Ready	26
Read Data	24

Input Signal Descriptions

Drive Select 1,2 - A logical 0 on this line selects the designated drive for operation.

Direction Select - This line defines the direction of the head movement when the step line is activated. A logical "1" on this line defines the direction as "out", and when the step line is activated the head moves to the outside of the disc. A logical 0 on this line defines the direction as "in", and when step is active the head moves toward the disc center.

Step - This line causes the read/write head to move in the direction defined by the Direction Select signal line. The transition from logical 0 to logical 1 initiates the stepping motion. Three steps or pulses are required to move one track.

Head Load - This line causes the read/write head to contact the disc surface. If the drive is not selected this line is disabled. When a disc is inserted into the drive, the head is momentarily loaded, automatically by the drive, to properly seat the disc on the spindle.

Write Data - This line is used for data that is to be written on the disc. A transition from logical one to logical zero changes the polarity of the read/write head current and causes a data bit to be written on the disc. This data line is active when the following signals are in the indicated states:

Signal	Logical State
Write Gate	0
Ready	0
Write Protect	1

Motor On - A logical 0 on this line will turn on the motor, assuming the drive is selected and a disc is inserted; a logical 1 turns off the motor.

Output Signal Descriptions

Index - This signal line is used to indicate a reference position on a track. The line is usually a logical one; it becomes logical zero when the drive senses the index mark. The trailing edge of the signal should be used to determine position. This line becomes a logical one when the drive is not selected.

Track 0 - This line indicates that the read/write head is located at track 0 (the outermost track). Logical zero on this line is the indication. A logical one indicates that the read/ write head is not at track 0. When the drive is powered up, the read/write head is positioned at track 0, and when the drive is not selected this line becomes a logical 1.

Write Protect - Write protect indicates a write protected disc. A logical zero on this line indicates that the disc is write protected and you cannot write on the disc. A logical one on this line indicates the disc is not write protected and you can write data on the disc. If no disc is resident in the drive, this signal appears as a logical zero. If the drive is not selected, this signal is set to a logical one.

Ready - This line is a logical zero if the following conditions are all true:

A disc is inserted.
The motor is rotating.
This drive unit is selected.

At all other times, this signal line is a logical one.

Read Data - This line contains the data and clock signal together. This signal line is normally a logical one and gets pulsed when data is read. The falling edge of the pulses are interrupted as data.

Drive Electronics Interface Timing

The following figure shows the timing relationship for the signals going to and from the drive electronics assembly.

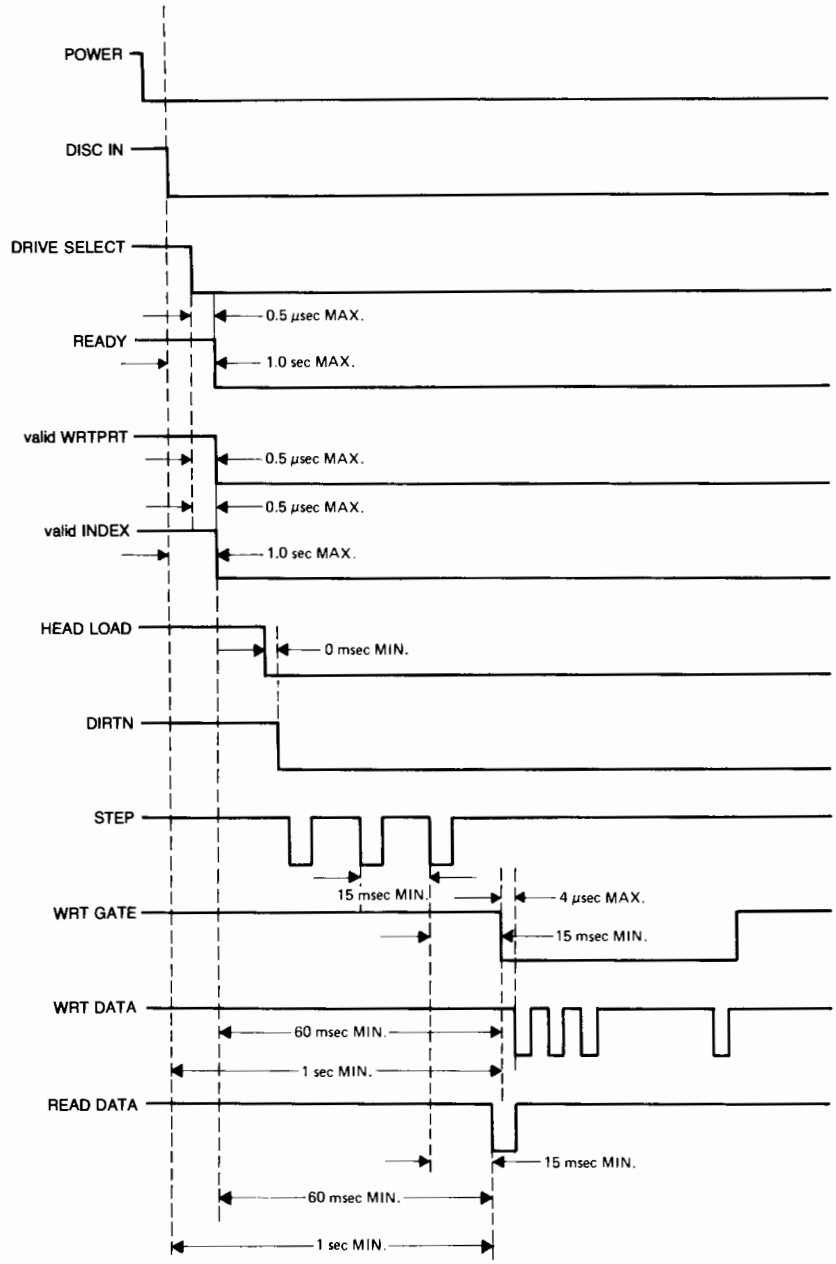

Figure 2-2. Drive Electronics Timing

Controller Assembly

The Controller assembly is described here with a functional diagram. Physical location of the major components are presented in each of the product tabbed sections.

The Controller section of the printed circuit board interfaces between the Drive Electronics and the HP-IB interface. It consists of an interface chip, microprocessor which accesses 8 Kbytes of ROM and 1 Kbytes of RAM, and a Flexible Disc Controller. The flexible disc controller interfaces between the microprocessor and the disc drive itself. The flexible disc controller controls the following: data modulation, precompensation, cyclic redundancy check (CRC), address mark detection, and various registers. Additionally, a discriminator and phase lock loop complete the controller assembly functions. See the following figure.

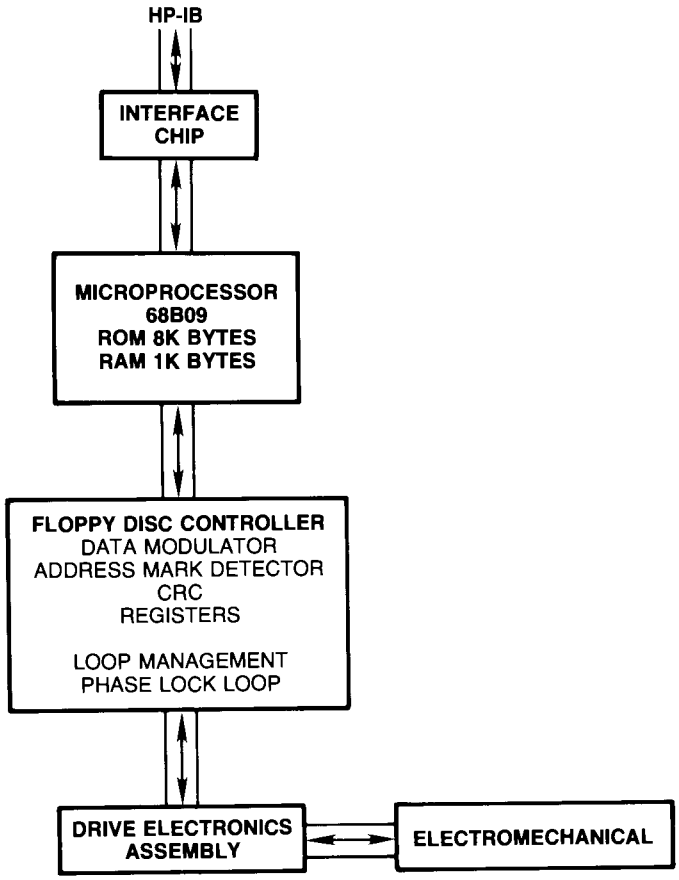

Figure 2-3. Controller Assembly

Interface Chip

The interface chip interfaces between the microprocessor and the host controller. It provides the handshake protocol, talker/listener addressing, serial and parallel poll responses, generates service requests, and provides data transfer. Data transfer is provided using 16 data registers: 8 registers for the microprocessor to write to and 8 registers to read from.

Microprocessor

The microprocessor (68B09) accesses 8 Kbytes of ROM and 1 Kbytes of RAM. The ROM contains the 59 Amigo command interpretations along with the selftest code. The RAM is used as a scratch pad for the microprocessor and a data buffer for data going to and from the disc.

Flexible Disc Controller

As mentioned earlier, the flexible disc controller functions are: data modulation, precompensation, cyclic redundancy check (CRC), address mark detection, and register control.

System circuitry modulates data to be written onto the disc in Modified Frequency Modulation (MFM) format.

Transitions which are written close together tend to appear shifted apart when read back. This effect is known as bit shift. Because of the small bit cell used, bit shift is noticeable. To compensate for this bit shift, certain MFM transitions are written closer together or farther apart (125 nanoseconds). This action is called precompensation. Precompensation is applied beginning with track 44.

The CRC generates or compares the 16 bit cyclic redundancy check digit in the ID and data fields to check for errors.

The following registers are controlled by the flexible disc controller:

Command -	Contains the current command being executed
Status -	Holds the current status information
Data -	Contains parallel data
Data Shift -	Holds serial data
Track -	Holds track number of current head position (data is compared with data in ID field during read, write verify)
Sector -	Contains target sector number

Loop Management

The loop management contains a discriminator and phase lock loop. The discriminator counts bits to determine the location of a sync field as apposed to a data field. Once a sync field is detected, the phase lock loop is locked and the serial data (transitions and clocks) is sent to the flexible disc controller. Here the data is decoded and converted into 8-bit bytes.

After the data is converted to 8-bit bytes, it is stored in RAM until a complete sector (256 bytes) is obtained. The CRC is then read and checked. If it matches the CRC written with the data, the data is sent to the HP-IB.

Recording Format

This section describes the recording format used in the HP Micro-Flexible Disc Drive. The 3 1/2-inch drive supports the HP standard micro-flexible disc format (hereafter referred to as the HP format).

Media

A single-sided flexible disc is used as the recording medium. The disc is composed of flexible recording material and is enclosed in a square plastic jacket.

Tracks

There are 70 physical tracks on each side of the disc, with a spacing of 0.0074 inch between tracks (135 tracks per inch). The outermost track is track 0 and the innermost track is track 69.

Recording

Information is stored on the disc as a series of magnetic flux reversals. Since a single head is used to read from and write on the disc, a self-clocking code (MFM) is used to store and read the information.

The portion of the disc or the duration of the time used to store a single bit is referred to as a bit cell. The first part of the bit cell is called the clock window and the remainder of the bit cell is called the data window. A flux reversal in the clock window is called a clock transition and a flux reversal in the data window is called a data transition. A bit cell that contains a data transition stores a 1 and a bit cell with no data transition stores a 0.

Track Numbering

Each track has a physical address as described previously. There is also a logical track address associated with each "good" track. The logical track address is written in the ID field of each sector on the track. If a flexible disc has no "bad" tracks, the logical address of a track is the same as the physical address.

A disc with n bad tracks can be made to look like a 70 - n track disc with no bad tracks. To do this, the logical track address stored in the ID field of each sector of every bad track is set to FFH. Tracks of this type are known as invisible tracks. All non-invisible tracks are then sequentially assigned logical track numbers. Logical track 0 is the outermost good track, not necessarily physical track 0.

The HP format uses a double-density encoding scheme known as modified frequency modulation (MFM). The rules for MFM coding are as follows:

- A 0 bit cell has no data transition.
- A 1 bit cell has a data transition.
- A 0 bit cell has a clock transition if there is no data or clock transition in the preceding bit cell.
- A 1 bit cell never has a clock transition.

Track Format

Each track is divided into sectors, with 256 data bytes per sector. The data contained in one sector is the smallest amount of information written at one time. The disc is soft-sectored, that is, there is no hardware indication of where each sector starts. Instead, the beginning of each sector is indicated by information recorded on the disc.

In order to allow soft-sectoring, each sector is divided into two fields. First, there is an ID field which contains information to identify the sector. Next, there is a data field which contains the actual data. The ID field is written only when the disc is formatted, not during a data sector write operation. Thus, an ID field serves as a fixed marker for the beginning of each sector. The entire data field is rewritten each time a write operation occurs to the sector.

The makeup of the ID and data fields is similar. Both fields start with a series of sync-up bytes. These bytes end with a long string of identical bits. During a read, this bit string allows the decoder circuitry on the controller PCB time to synchronize itself with the data on the disc. Next comes a preaddress mark field and an address mark byte that indicates the beginning of an ID or data field. The data stored in this byte indicates the type of field. In order that no other byte can be mistaken for the preaddress field, these bytes contain an abnormal pattern of clock transitions.

Following the address marks comes a series of information bytes. In an ID field, these bytes indicate the logical cylinder, head, and sector address of the sector. In a data field, these bytes are the data being stored in the sector.

At the end of each field are two cyclic redundancy check (CRC) bytes. These bytes allow the detection of most errors that occur in the storage and recovery of information from the disc.

There are gaps between each field on a track. The gaps allow for variations in disc rotational speed, and time for the hardware to prepare for the next field.

The sectors are accessed consecutively according to their logical address. However, the sectors may occur in any physical order around the track. This allows the sectors to be interleaved to optimize system performance.

Table 2-1. Track Format

	NUMBER OF BYTES	HEX VALUE	DESCRIPTION
	32	4E	Post-index gap
16X	12	00	ID Address Mark Sync
	3	A1	(Note 1)
	1	FE	ID Address Mark
	1	XX	Cylinder Number (Note 2)
	1	XX	Head Number (Note 3)
	1	XX	Sector Number (Note 4)
	1	XX	Sector Length (Note 5)
	12	XX	CRC (Note 6)
	22	4E	ID Gap
	12	00	Data Address Mark Sync
	3	A1	(Note 1)
	1	FB	Data Address Mark
	256	XX	Data
	2	XX	CRC (Note 6)
	46 (Note 7)	4E	Sector Post-/Pre-amble
	204 (Note 8)	4E	Pre-index Gap

1. Missing clock transition between bits 4 and 5.
2. Cylinder numbering begins at 0.
   Invisible tracks have cylinder number = FFH.
3. This will be 0. (lower head)
   Invisible tracks have head number = FFH.
   Defective tracks have bit 5 of head number set to 1. This is the D bit.

4. Sector numbering begins at 0.
   Invisible tracks have sector number = FFH.
5. Length = 2 exp (7 + sector length); where sector length = 0,1,2,3
6. Sixteen bit Cyclic Redundancy Check. The polynomial is G(X) = X exp 16 + X exp 12 + X exp 5 + X exp 1. The CRC register is initialized to ones and includes all information starting with the address mark and up to the CRC characters.
7. The intersector gaps allow for ±3.5% motor speed variation.
8. Minimum PRE-INDEX GAP size based on ±3% motor speed variation. Additional bytes (4E) are written until the index pulse occurs.

Chapter 3
Assembly Access

Introduction

This section describes the assembly removal for the 3 1/2-inch drive. Just the items necessary to access the adjustments and checkpoints are removed. The following section covers the removal and replacement of the main cover, front panel, load pad, and the drive electronics PCB. For information on the removal of the entire drive, see the removal section under the tabbed section pertaining to your device.

The following topics are covered in this section:

Main Cover Replacement
Front Panel Replacement
Load Pad Replacement
Drive Electronics Assembly Removal

Main Cover Replacement

The main cover is held secure using three flanges and one securing screw. Removing the screw and lifting the end of the main cover allows the flanges to be disengaged and the cover removed. See the following figure. Reverse the procedure for installation.

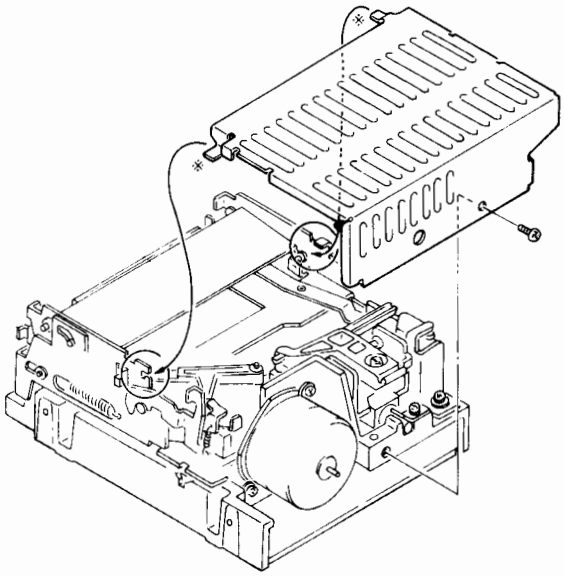

Figure 3-1. Main Cover Replacement

Front Panel Replacement

The front panel contains the eject button, disc access light, and the slot allowing the disc access to the drive mechanism. This panel is held in place using two screws and nut plates. The screws are accessed from the bottom side of the drive. See the following figure. The nut plates are placed in slots in the front panel. Sufficiently loosing the screws allows the nut plates to be slipped from the front panel, thus staying attached to the drive. The eject button and loading spring are removed with the front panel, whereas, the LED (disc access light) remains attached to the drive.

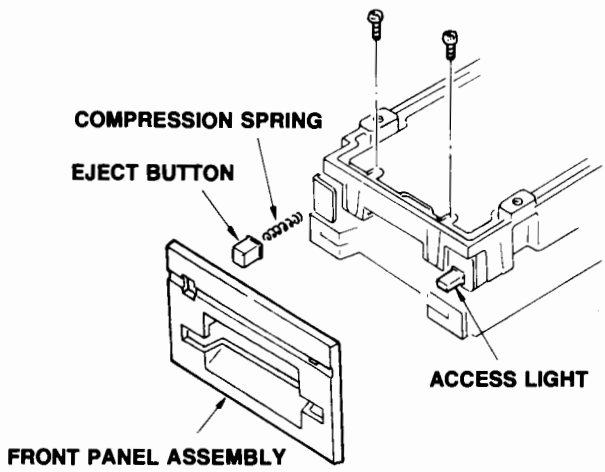

Figure 3-2. Front Panel Replacement

Load Pad Replacement

Replacing the load pad first requires that the main cover is removed. See the previous section titled "Main Cover Replacement" for that information.

Once the main cover is removed, lift and hold the load pad arm. Use care so as not to exert any unnatural force against the arm. Remove the old load pad using a tweezers. See Figure 3-3.

New load pads are available in a stamped felt material P/N 09121-88811. Bending the felt in a U shape allows you to access the individual load pads with a tweezers. Remove a load pad by catching it as lightly as possible on both sides with the tweezers and peeling it from the felt. Be careful so as not to crush or permanently distort the load pad. With the load pad between the tweezers insert it directly into the recessed area of the load pad arm. Center it into the recessed area making sure to seat the load pad evenly. See Figure 3-4.

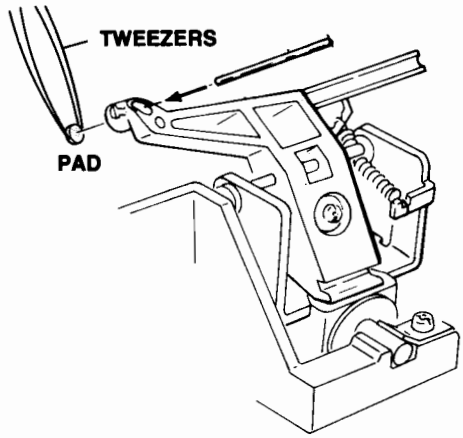

Figure 3-3. Removing the Load Pad

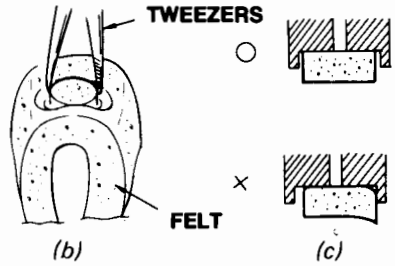

Figure 3-4 Load Pad Replacement

Holding the load pad arm slightly above the read/write head, check that the new load pad is parallel with the read/write head.

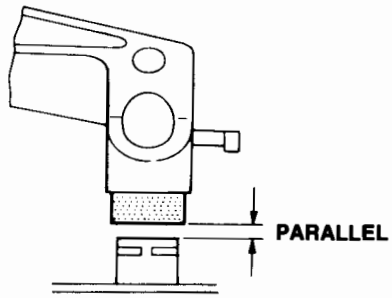

Figure 3-5. Load Pad and Head Reference

Drive Electronics Assembly Removal

Removing the drive electronics assembly requires the drive be placed upright on either side. Remove the three screws holding the assembly to the casting. Note the position of the noise shield as it must be reinstalled in the same manner. Also, note the slot in the casting in which the assembly is inserted. See the following figure.

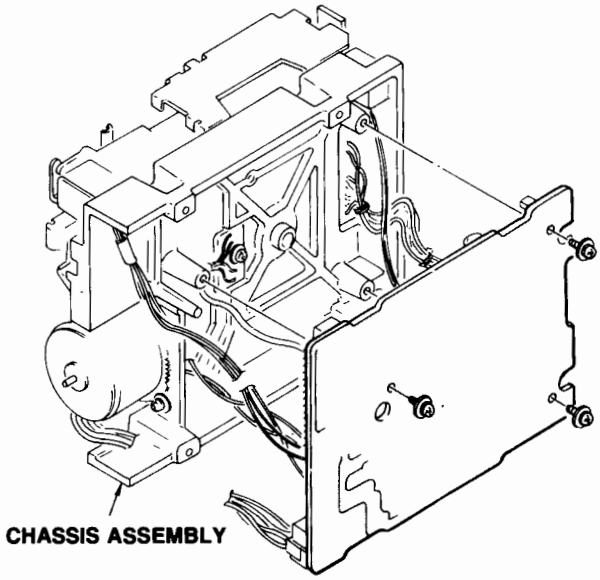

Figure 3-6. Drive Electronics Assembly Removal

If for any reason the drive electronics assembly is completely removed, refer to the following figure for cable placement.

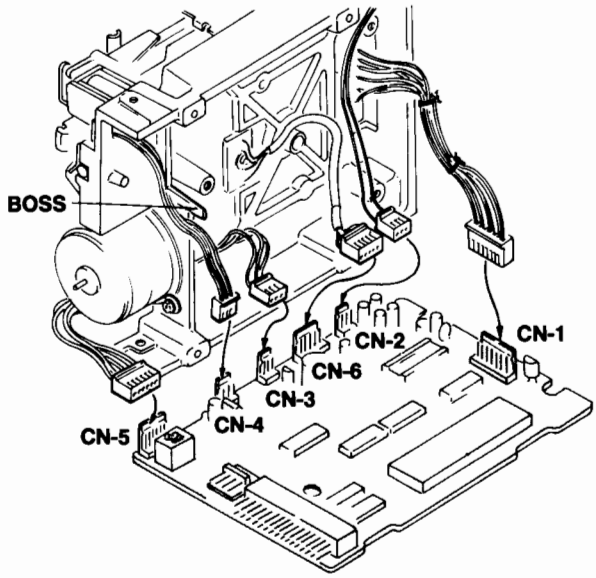

Figure 3-7. Drive Electronics Assembly Cable Location

Chapter 4
Selftests and Adjustments

Introduction

This section explains the selftests and adjustments available for ensuring the proper operation of the 3 1/2-inch drive. All selftests must be run with the drive installed in the disc memory. The selftests and adjustment procedures are the same for the 3 1/2-inch drive in all installations.

An Exerciser Tape, inserted into an HP 85 Personal Computer that is connected to your disc memory, is used to position the drive for all the adjustments except load pad position and head load force.

The following topics are discussed in this section:

- Selftests
  - Power-on Selftest
  - User Confidence Selftest (9121 Only)
  - Remote Selftest
  - Service Selftest
- Adjustments
  - Equipment Required
  - Exerciser Tape
  - Head Cleaning
- Motor Speed
- Head Radial Alignment
- Head Compliance
- Load Pad Position and Head Load Force
- Read Amplifier Gain and Offset
- Other Checks
  - Amount of Disc Access
  - PLL Free-run Frequency

Selftests

There are three selftest modes on the 9121 and the 9133; power-on, remote, and service selftests. An additional user confidence selftest mode is accessible on the 9121 using the address switches. This user confidence test is available on the 9133 after the top cover is removed. See "User Confidence Selftest".

Power-on Selftest

The power-on selftest exercises the RAM, the FDC (flexible disc controller) chip, and calculates a checksum for the ROM. The processor goes no farther, waiting for service, if RAM or ROM tests fail. Next tested is the FDC. If this test fails, the selftest LED turns on and does not flash. The processor continues to initialize the system and allows the host to talk to the disc drive if possible. The confidence test LED flashes five times if all tests are passed successfully.

The confidence test LED is visible through the slots in the front of the 9121D/S and visible through a rear panel hole on the 9133.

User Confidence Selftest

The user confidence selftest (9121 only) is initiated by toggling the left-hand-most address switch on the back panel from up to down to up.

The user confidence selftest for the 9133 is initiated by removing the top cover and shorting the "CT" Confidence Test pins on the Controller assembly. See the component locator for that assembly under the 9133 tabbed section.

If each drive contains a disc that is NOT write protected, a complete selftest is performed: a RAM, ROM, HP-IB, FDC, seek, motor speed, format, and read verify test. The RAM test reads and writes checkerboard patterns into the RAM. The ROM test calculates a checksum for the ROM and compares that to a precalculated value. The HP-IB test reads and writes to selected registers on the HP-IB chip and then sets the chip up to talk to itself and echo data back to the processor. No testing of the interface to the host occurs. All HP-IB cables must be disconnected from the disc memory for the test to operate correctly. The FDC test reads and writes to selected registers on the chip. The seek test steps the head to track 69 and then back to track 0, testing for movement on each drive. The motor speed test measures the index period and compares it to the drive specifications. The format test formats the discs in each drive.

WARNING

ALL DATA ON THESE DISCS IS DESTROYED AND IS UNRECOVERABLE.

The read test verifies the CRCs on the discs. If all these tests are passed successfully, the confidence test LED flashes ten times. If any test fails, no flashing occurs and the LED turns on for 5 seconds.

If the media inserted in drive 0 is write protected, then the formats test is skipped. If all the other tests are passed successfully, the confidence test LED flashes ten times. If no media is inserted in drive 0, then the seek motor speed, format, and read tests are skipped. If the other tests are passed the confidence test LED flashes ten times. If a failure occurs, the LED turns on for 5 seconds.

If the back panel switch is left in the down position, the behavior of the 9121D/S is unpredictable.

After this user confidence test, the drives are reset and the 9121D/S appears, to the host, to have just been powered-on.

Remote Selftest

The remote selftest is the test initiated by the host controller with the proper HP-IB passed command. It is basically the same as the full user confidence test without the HP-IB test. Results of the test are available over the HP-IB. See the Initiate Selftest command description in this document for more details.

Service Selftest

The service test uses the HP-IB address switches to select one test to be run.

Address	Test	#Flashes
0	RAM	1
1	ROM	2
2	HP-IB	3
3	FDC	4
4	Drive Seek	5
5	Motor Speed	6
6	Format	7
7	Read/Verify	8

Each test is initiated by shorting the selftest pins on the PC board. See the printed circuit board drawing in each tabbed section for pin location. If continuous testing is desired, the Loop pins should be shorted as well. At the start of each test, the confidence test LED is on for about five seconds. If the selected test is successful, the LED flashes the number of times indicated by the previous table. If the test fails the LED will be lit for 5 seconds.

Adjustments

The following list of equipment is needed to complete all of the adjustment procedures:

Equipment Required

9121D/S or 9133
HP-85 with ROM drawer, I/O ROM, 16K Memory Module, and an HP-IB interface
Amigo Protocol Exerciser and Service Package (HP Part No. 5061-2808)
Oscilloscope, 1740A or equivalent Frequency counter which can measure 100 msec period and 1MHz frequency
3 1/2-inch alignment disc (09121-89400)
3 1/2-inch level disc (09121-89401)
3 1/2-inch cleaning disc (09121-89405)
3 1/2-inch regular disc (92191A = box of 10)
Load pad (09121-88811)
Tension gauge, calibrated in grams (8750-0051)
Pad weight (09121-88810)
Radial alignment tool (8710-1518)
1 Pozidrive screwdriver
2 Posidrive screwdriver
3/16 Slotted screwdriver
Small pocket screwdriver
Small needle-nose pliers
Tweezers
3 1/2-inch Disc Drive Service Manual (09121-90030)
Four power cords
One HP-IB cable

The Exerciser Tape

Connect the HP-IB cable to the disc memory and insert the tape into the HP-85. Turn on power to the HP-85 and the disc memory. Respond to the screen prompts to obtain an interpretation of the selftest and status bytes for the disc memory. Select the AUTO mode of the exerciser. This mode of the Exerciser tape allows you to execute a preset sequence of operations.

Select the SERV softkey to load the service routines program.

NOTE

In the following oscilloscope set-up instructions, the amplitude settings assume that 10:1 probes are being used. If 1:1 probes must be used, multiply these settings by 10.

Head Cleaning

After the service program has loaded, select the Head Clean function. Use the special cleaning disc for this operation. Be aware that this function actually performs a Format operation, so if a regular disc is inserted in the drive all data on it will be lost. This routine will last approximately 30 seconds.

Motor Speed

The motor speed is automatically checked and displayed when this function is selected. If the motor speed is out of spec this appears on the Display. To adjust the motor speed the front panel of the drive must be removed. See the disassembly chapter for information on drive removal.

CAUTION

ALWAYS DISCONNECT LINE POWER WHEN REPOSITIONING THE DISC DRIVES FOR THESE TESTS.

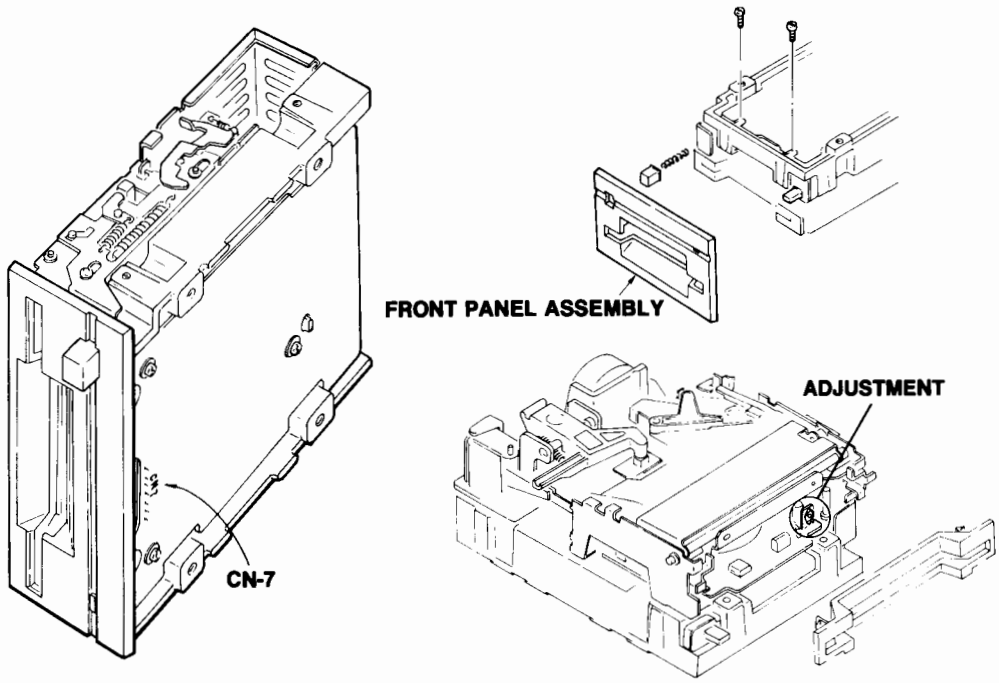

Figure 4-1. Motor Speed Adjustment

Rest the drive mechanism on its side to allow access to the test point connector CN7 on the front of the drive electronics assembly. See Figure 4-1. Reconnect the line cord and turn on power to the drive.

Connect the frequency counter to pin 3 on CN7. Select the ALIGN service routine, then the Motor Speed function in the Service Program. This portion of the ALIGN routine loads the head on track 35 of a standard disc. With the disc inserted and the head loaded, the frequency counter should measure a period of 100msec, ±1.5 msec. If this measurement is not within spec, the motor speed adjustment potentiometer must be adjusted. See Figure 4-1.

CAUTION

ALWAYS MAKE THIS ADJUSTMENT WITH A PLASTIC ADJUSTING TOOL. IT IS POSSIBLE TO SHORT ACROSS THE POTENTIOMETER WHEN MAKING THE ADJUSTMENT.

NOTE

The head should be loaded on track 35 while performing this adjustment in order to obtain the optimum motor speed.

Head Radial Alignment

Select the Radial Alignment check routine. This routine allows a cat's eye pattern to be used to check the radial alignment of the head. The cat's eye is produced using the sum of signals written on two non-concentric circular tracks of sine waves recorded on the alignment disc.

Oscilloscope connections for this procedure are given next:

Channel A: Connect to pin 8 of CN7 (Read Amp Output) on the drive electronics PCA; 0.02 V/div; AC coupled

Channel B: Connect to CN7, pin 3 (Index Pulse); 0.2 V/div: AC coupled

Trigger: Internal on Channel B

Time Base: 10msec/div

Mode: Normal

Display: Channel A

Insert the Alignment disc and apply power to the disc memory.

Measure the amplitudes of the adjacent cat's eyes. Their ratio should be between 0.8 and 1.2. See Figure 4-2. Press k1 to seek head to Track 69 (the outermost track) and then back to Track 32. Take the ratio of the cat's eyes again. The two ratios should not differ by more than 30%. This procedure checks the hysteresis in the head positioning mechanism.

If the ratios differ by more than 30%, the following adjustment must be made.

Remove the Drive Electronics Assembly – See Figure 3-6 and Figure 4-2.

Loosen the steppermotor screws labeled A in Figure 4-2.

Insert the Alignment Tool (8710-1518) as shown and rotate the steppermotor until the cat's eye ratio is within ±5% of each other.

Tighten the screws labeled A during the adjustment and recheck the ratios.

Reassemble the drive.

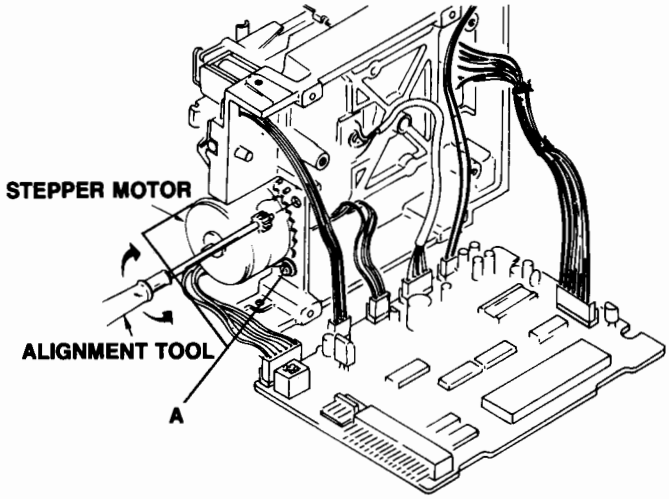

Figure 4-2. Radial Alignment Adjustment

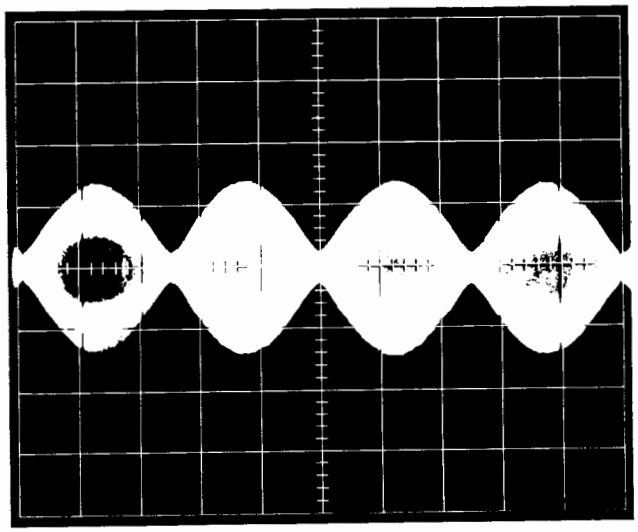

Figure 4-3. Head Radial Alignment

Move the Channel A probe to CN7, pin 4. Switch Channel A to DC-coupled, 0.1 V/div. Press k1 to seek to Track 1. The DC level at pin 4 should now be over 3 V. Press k1 again to seek to Track 0. The DC level should now be less than 0.5 V. This procedure checks the operation of the Track 0 sensor. It should always be performed whenever the Head Radial Alignment is adjusted. If you are unable to obtain these results, change the drive.

Head Compliance

Select the Head Compliance check function. This routine causes a 2F signal to be written on Track 69 of the Level Disc and allows you to check the resulting read signal level. Set up the scope as in the Index-to-Phase section, but display Channel A only. Measure the amplitude of the signal envelope. Place the pad weight on the load pad arm. (See Figure 4-4). Again measure the amplitude of the envelope. This level must meet the following two conditions:

1) It should not be greater than the first level (before the weight was put on).
2) It should not decrease from the first level by more than 5%.

If these conditions are not met, perform the procedures in the section titled "Load Pad Position and Head Load Force", then check head compliance again. If the conditions are still not met, replace the load pad.

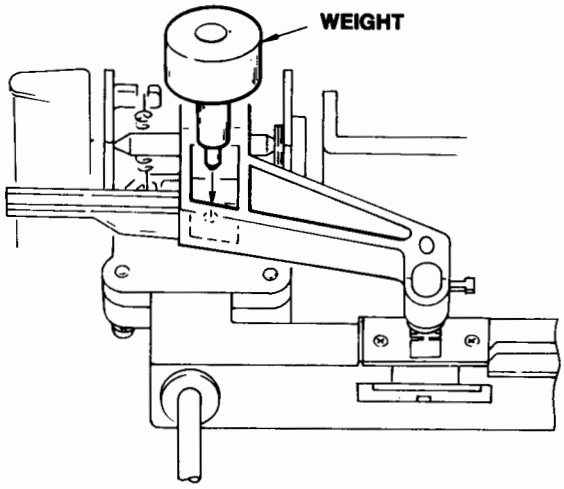

Figure 4-4. Head Compliance

Load Pad Position and Head Load Force

Turn off power to the drive. Remove the disc drive from the disc memory. Remove the main cover from the drive mechanism. With no media inserted, set the drive mechanism to disc-in mode by releasing the latch on the upper right rear of the mechanism. (See Figure 4-5.)

Look at the load pad from the front and from the side of the mechanism. The pad should appear centered in its mounting hole in the load pad arm when sighting along both directions. Also the pad should meet the head squarely. If it is offset when viewed from the front, loosen

the screw on the top of the pad arm and reposition the arm. If it is offset when viewed from the side, remove the three slotted screws which hold the drive electronics PCA onto the drive mechanism, then loosen the two slotted screws which are accessible through cutouts in the bottom of the drive casting. Reposition the pad arm, tighten the screws, and repeat the checks.

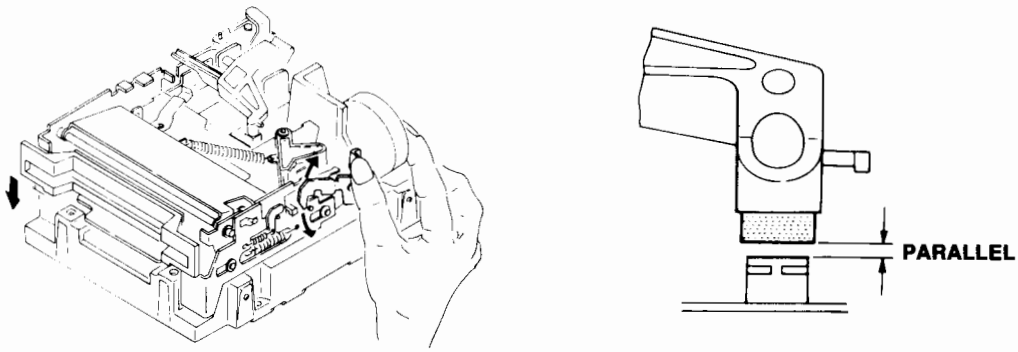

Figure 4-5. Load Pad Position

To check the head load force, attach the string loop from the tension gauge around the small arm near the load pad. See Figure 4-6. Press the head load arm(the plastic arm attached to the head load solenoid) down to load the pad against the head. Lift the load pad arm by lifting the tension gauge straight upward. When the pad just begins to lift off the head, note the reading on the tension gauge. This force should be 11 $\pm$1 gram.

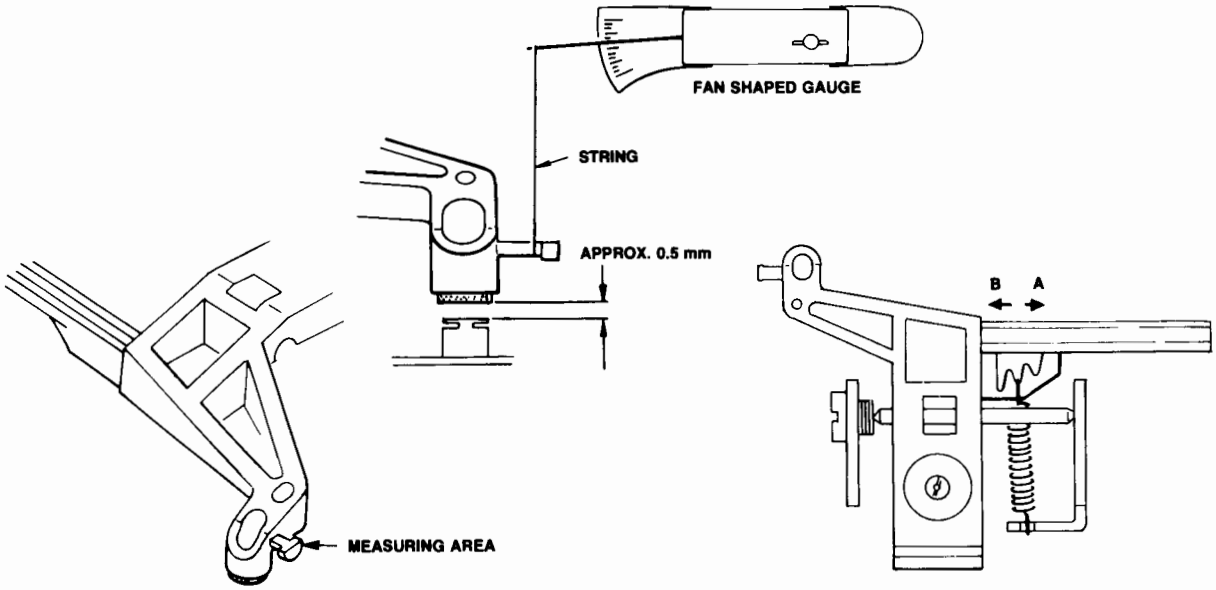

Figure 4-6. Head Load Force

If the required force is too great, move the spring on tne load pad arm to the notch toward the inside of the drive mechanism. If the force was too small, move the spring to the notch toward the outside of the drive. Check the force again. Before any media is used in the drive the head must be cleaned because the head may have been contaminated by its contact with the load pad. Place the cover back on the drive mechanism, press the eject media button, and reconnect the drive electronics PCA. Select the Head Clean function in the Service Program and follow the directions in the routine.

Read Amplifier Gain and Offset

Select the Read Amp function in the service program. Connect scope as follows:

Channel A: Connect to CN7, pin 6 (Read Data); 0.5 V/div; AC coupled

Channel B: Connect to CN7, pin 8 (Read Amp Output); 0.02 V/div; AC coupled

Trigger: Internal trigger on Channel B
Mode: Normal

Time Base: 1 usec/div

Display: Channel B

Apply power to the disc memory, insert the Level disc, and follow the instructions in the routine. After writing the 2F signal on Track 0, check for a sine wave of 4 usec period and 0.5 V p-p, ±0.30 V amplitude on the scope. See Figure 4-7.

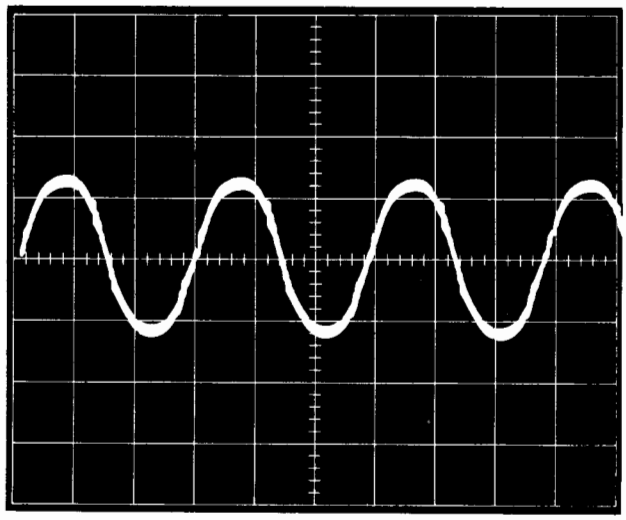

Figure 4-7. 2F: 1 usec./div Signal

Next, the drive writes a 1F signal on Track 0. Switch the time base to 2 usec/div; the scope should then show a complex wave of 8 usec and 0.8 V. See Figure 4-8.

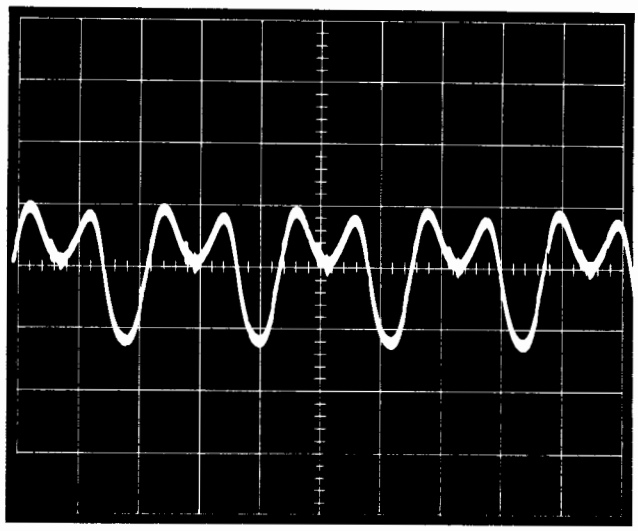

Figure 4-8. 1F: 2 usec./div Signal

Next, a worst case data pattern is written on the disc. The Channel B signal should be a complex wave of 6 usec and 1 V. See Figure 4-9.

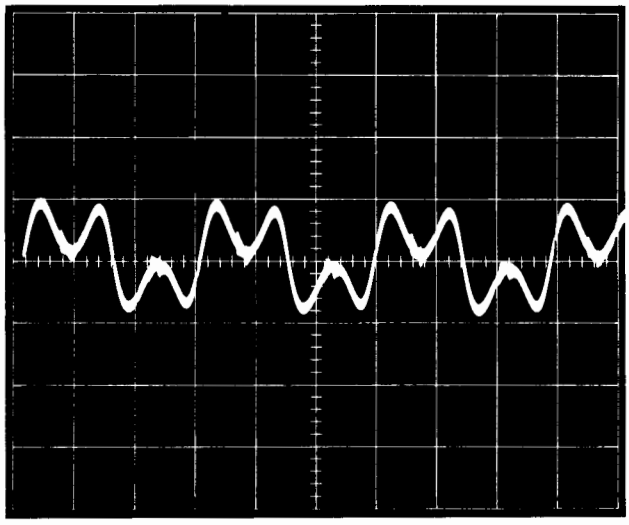

Figure 4-9. Worst Case Signal

Next a 2F signal is written on Track 0. The scope should show a sine wave of 4 usec and 1.5 V. Next a 2F signal is written on Track 69. The scope should show a sine wave of 4 usec and 0.8 V. Before pressing k1 to continue the routine, switch to Chopped Display and expand the time base to 0.5 usec/div. See Figure 4-10. Check the period of the Read Data pulses on Channel A. This period should be 2.0 usec ± 30 nsec. If necessary, adjust RV-3 on the drive electronics PCA to bring the signal into spec. Return the time base to 1 usec/div, and continue the program by pressing k1. The worst-case ± data pattern will then be written on Track 69.

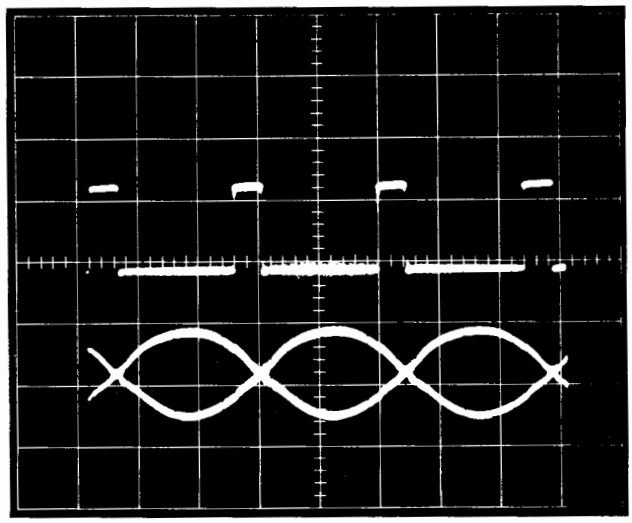

Figure 4-10. Read Data Pulses

Check the separation of the closer-spaced data pulses on Channel A. This spacing should be less than 2.5 usec. See Figure 4-11.

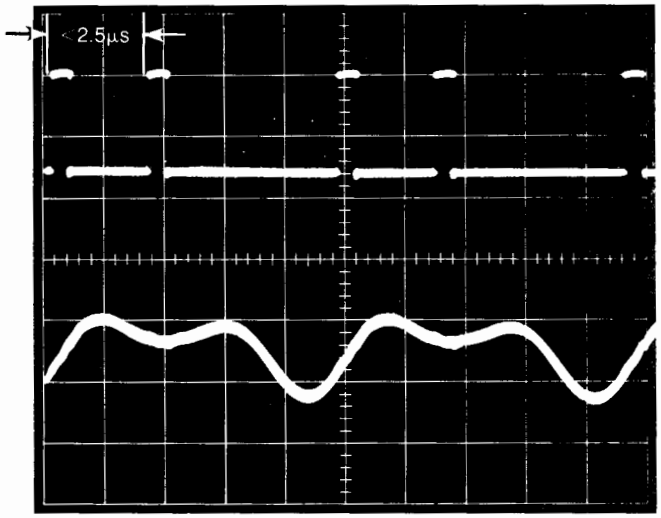

Figure 4-11. Checking separation

Other Checks

Amount of Disc Access

Select the # Spins function in the ALIGN routine in the service program. This function reads and displays the number of disc access revolutions recorded on the disc. This is the number of head loaded revolutions. The upper limit on this "Media Monitor" internal test is 1 500 000 revolutions. With a disc which has been formatted but not fully initialized, this number will be invalid.

PLL Free-Run Frequency

Connect the frequency counter to pin 12 of U33 forthe 9121D/S and pin 12 of U37 for the 9133. See the Controller Assembly (Tabbed Sections) for this location. While the drive or drives are idle, a frequency of 1.00 MHz, + /-10 kHz should be obtained. If necessary, adjust trimpot R3 (at the front of the PCA) to adjust this frequency.

This check should be performed whenever read errors or disc interchangeability problems occur.

Computer Museum

Section II
9121D/S

This section contains information on the 3 1/2-inch Flexible Disc Drive installation in the HP 9121D/S. The following chapters are contained in this section.

Chapter 1 General Information
Chapter 2 Installation
Chapter 3 Interface Information
Chapter 4 Troubleshooting
Chapter 5 Assembly Access

All selftests and adjustments for this product are explained in Section I.

Chapter 1
General Information

Introduction

This chapter contains general information on the HP 9121D/S Disc Drive. Included in this section is the following:

Product Description
Specifications
Equipment Supplied
Unpacking Your HP 9121D/S Disc Memories
Cleaning the Case

Product Description

The HP 9121D/S Disc Memories (Figures 1-1) are random access data storage devices. The HP 9121S contains a single 3 1/2-inch disc drive providing 286.72 Kbytes of storage capacity. The HP 9121D contains two 3 1/2-inch disc drives providing a total storage capacity of 573.44 Kbytes.

The 9121D/S Drives have been designed to emulate the HP 82900 Series Disc Drives. The 82900s are HP's 5 1/4-inch Flexible Disc Drives. Thus, HP computers that support the 82900 Flexible Disc Drives will support the 9121D/S. Refer to the Mass Storage Manual of your computer for programming information for the HP 82900 5 1/4-inch Flexible Disc Drive.

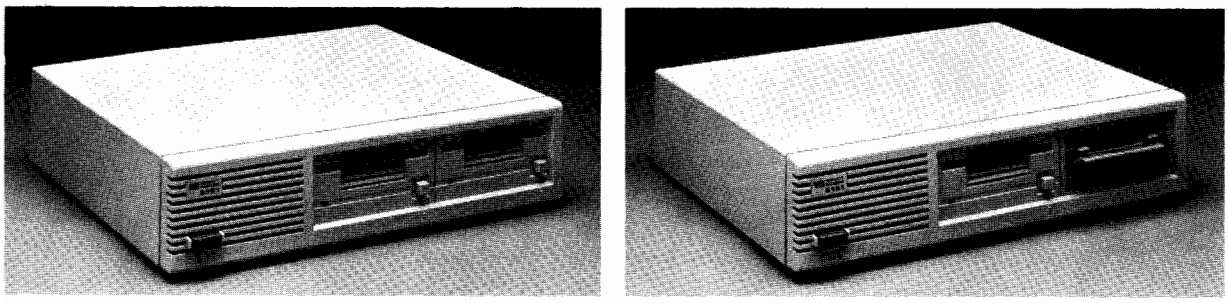

Figure 1-1. HP 9121D/S Flexible Disc Memories

Technical Specifications

Listed next are the electrical and physical specifications for the HP 9121D/S disc memories.

	HP 9121S	HP 9121D
Number of drives	1	2
Net Weight	3.6 kg (8.5 lbs)	4.5 kg (10 lbs)
Height	76 mm (2.99 in.)	
Depth	285 mm (11.2 in.)	
Width	325 mm (12.8 in.)	
Interface	HP-IB	
HP Double Density format		
Encoding:	MFM	
Rotational Speed:	600 RPM	
Bit Density @ 600 RPM:	Track 69 (Inside track)	7610 BPI
Track Density:	135 tracks per inch	
Tracks per Surface:	70	
Surfaces used per disc:	1	
Capacity		
Bytes/Sector:	256	
Sectors/Track:	16	
Tracks:	70	
Bytes/Drives (Formatted):	286.72 Kbytes	

NOTE

All of HP's computers spare 4 complete tracks. This reduces the useable user space to 256*16*66 (bytes/sector times sector/track times unspared tracks). This total equals 270.34 Kbytes. Additionally, directories further reduces useable user space. This, as implemented by HP, generally takes track 0. Actual useable space then is somewhere less than 270.34 Kbytes.

Access Time		
Track-to-Track Seek:	15 ms/track, plus	15 ms settling
Maximum Track-to-Track Seek (70 tracks):	1070 ms	
Average Track-to-Track:	370 ms	
Maximum Rotational Latency:	100 ms	
Average Rotational Latency:	50 ms	
(Seek plus Latency plus Motor on time):	2.170 s	
Average Data Access Time:	420 ms	

Data Transfer Rates:

Interleave	Burst Rate (1) (Bytes/sec)	Avg. Transfer Rate (2) (Bytes/sec)
1	3.2K	2.6K
2	60.9K	17.1K
3	40.8K	12.1K
4	20.6K	9.2K
5	14.8K	7.6K
6	11.6K	6.4K
7	9.5K	5.5K
8	7.0K	4.8K
9	6.2K	4.3K
10	5.5K	3.9K
11	5.0K	3.5K
11	5.0K	3.5K
13	3.9K	3.0K
14	3.6K	2.8K
15	3.4K	2.6K

Maximum burst transfer rate of the 9121D/S is 64.5 Kbytes/s for writing and 67 Kbytes/s for reading.

(1) Minimum average burst rate required to utilize this interleave efficiently without introducing extra disc rotational latencies.

(2) Average data rate for a multiple-track read or write.

Power Requirements

86-125 volts or 195-250 volts @67 watts RMS
48-66 Hertz
Fuse 1A, 250V for 86-125V operation
Fuse .5A, 250V for 195-250V operation

Environmental Specs

Operating Limits

Temperature:	10° C to 45° C (50° F to 115° F)
Humidity:	20 to 80% with maximum wet bulb temperature (non-condensing) not to exceed 29° C (85° F).
Altitude:	0 to 4572 m (0 to 15 000 ft)

Non-operating Limits
(Storage and Transit)

Temperature:	-40° C to 60° C (-40° F to 140° F)
Altitude:	-304 to 15240 m (-1000 to 50 000 ft)

NOTE

The flexible disc in the HP 9121D/S Disc Memory is designed for operation in a typical office environment. Use of the equipment in an environment containing dirt, dust, or corrosive substances will cause the flexible disc drives and media life to be drastically reduced.

Equipment Supplied

The following equipment is supplied with each HP 9121D/S disc memory.

Table 1-1. Equipment Supplied

Description	Quantity		HP Part Number
Power Cable	1		Dependent on location (see Chapter 2)
* Operator's Manual	1		09121-90000
Fuse	1	96 to 125VAC 1.0 Amp	2110-0001
		or	
	1	195 to 250VAC .5 Amp	2110-0012
		Dependent on Location	

* This manual is available in the following languages:

German -- 09121-90006
French -- 09121-90007
Spanish -- 09121-90008
Italian -- 09121-90009

A package of ten discs has been set up as a product. This product is orderable using the 92191A product number.

A field upgrade kit adding the auto shutter is available under P/N 09121-88875.This kit contains the auto shutter mechanism and instructions for installation and alignment.

A new shielded top cover is available for those early versions of the 9121D/S whose owners are placing computer CRTs on top of the drives. This top cover is ordered using P/N 09121-88866. This shielded top cover is now included with all drives. It began with serial umber 2229A03802 for the 9121D and 2244A00341 for the 9121S.

Unpacking Your HP 9121D/S Disc Memories

Your disc memory was carefully inspected before shipment. Remove the unit from the shipping carton and carefully inspect the unit for any physical damage that may have occurred during shipment. If you find any damage, you should immediately notify your dealer and file a claim with any carriers involved.

CAUTION

THE DISC MEMORY IS A PRECISION INSTRUMENT. MECHANICAL SHOCK CAN MISALIGN THE READ/WRITE HEAD, RESULTING IN READ ERRORS AND/OR DAMAGED DISCS WHETHER THE DISC IS OPERATING OR NOT.

If the disc memory is moved, be careful when picking it up and setting it down.

Carefully repack the disc memory in a shipping carton before transporting it to another site.

NOTE

Evidence of excessive shock will void the warranty.

Please check to insure that you have received all of the standard equipment. If any items are incorrect or missing, please contact the dealer from whom you purchased the unit.

Cleaning the Case

The disc memory case consists of a pearl grey plastic material and is not painted. The rear panel has been painted with a durable, long lasting, non-toxic paint. This design will preserve the appearance of your disc memory for many years. When you want to clean the case, following the next instructions will sustain the quality finish. If the case finish should become damaged, consult your local Hewlett-Packard sales and service office for touch-up paints that are available.

CAUTION

CHEMICAL SPRAY-ON CLEANERS USED FOR APPLIANCES AND OTHER HOUSEHOLD AND INDUSTRIAL APPLICATIONS MAY DAMAGE THE CASE FINISH. THESE OR OTHER CHEMICAL CLEANERS SHOULD NOT BE USED.

Before cleaning the disc memory case, disconnect the power cord and any interconnecting cables. Dampen a clean, soft, lint-free cloth in a solution of clean water and mild soap. Wipe the soiled areas of the case, ensuring that no cleaning solution gets inside the unit. For cleaning more heavily soiled areas, a 50%-50% solution of clean water and isopropyl alcohol may be used. Wipe the case areas that had cleaning solution applied with a clean, soft, lint free cloth dampened in clean water, then dry the case with a dry, soft, clean cloth. A non-abrasive eraser may be used to remove pen and pencil marks.

CAUTION

DO NOT USE DETERGENTS THAT CONTAIN AMMONIA, BENZENES, CHLORIDES, OR ABRASIVES.

Chapter 2
Installation

Introduction

This section provides the installation and initial power-on procedures for the HP 9121D/S. The topics covered in this section are as follows:

Setting the Line Voltage Select Switches
Fuses
Power Cords
The HP-IB Interface
Selecting the Device Address
Controls and Indicators
Applying Power
Loading the Flexible Disc
  Manual Shutter
  Auto Shutter
Basic System Operation
  Write Protect Error On Initialization
  Data Errors

Setting the Line Voltage Select Switches

The voltage select switches on the rear panel must be set to the nominal line voltage for the area in which it is operating, Figure 2-1 shows the setting of the voltage select switches for the various line voltages.

CAUTION

ALWAYS TURN THE AC POWER SWITCH OFF OR DISCONNECT THE AC LINE CORD BEFORE CHANGING THE LINE VOLTAGE SELECT SWITCH POSITION. CHANGING THE LINE VOLTAGE SELECT SWITCH SETTING WHILE AC POWER IS ON COULD DAMAGE THE DISC MEMORY.

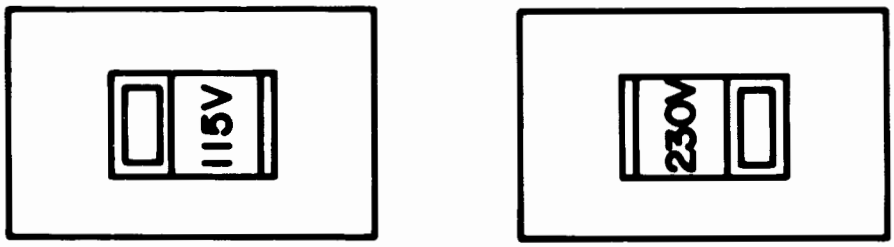

86-125 Vac 195-250Vac

Figure 2-1. Line Voltage Select Switches

Fuses

A different fuse is required for each of the two voltage ranges of 110-120 and 220-240 VAC. Table 2-1 gives the correct fuse ratings and part numbers. The fuse included in your 9121D/S depends upon where the equipment is to be delivered.

Table 2-1. Fuses

	Voltage Range	Fuse Rating	HP Part Number
HP 9121D/S	96 & 125VAC	1.A 250 VAC-Normal Blow	2110-0001
HP 9121D/S	196 & 250VAC	.5A 250 VAC-Normal Blow	2110-0012

One fuse is provided in the unit and it depends upon where the equipment is to be delivered. When servicing the drive, check to ensure that the correct fuse is installed.

WARNING
ALWAYS DISCONNECT THE DISC MEMORY FROM ANY AC LINE BEFORE CHANGING FUSES.

Power Cords

Power cords supplied by HP have polarities matched to the power input socket on the equipment (Figure 2-2).

- L = Line or active conductor (also called "live" or "hot")
- N = Neutral or identified conductor
- E = Earth or safety ground

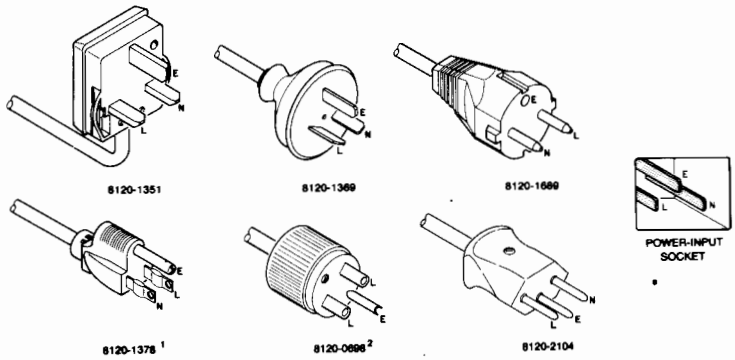

[1]UL and CSA approved for use in the United States of America and Canada with equipment set for either 100 or 120 Vac operation.

[2]UL and CSA approved for use in the United States of America and Canada with equipment set for either 200 or 240 Vac operation.

Figure 2-2. Available Power Cords

WARNING
IF IT IS NECESSARY TO REPLACE THE POWER CORD, THE REPLACEMENT CORD MUST HAVE THE SAME POLARITY AS THE ORIGINAL AS WELL AS THE EARTH OR SAFETY GROUND CONDUCTOR. OTHERWISE, A SAFETY HAZARD MIGHT EXIST IF AN INTERNAL FAILURE OCCURS.

The cord packaged with the equipment depends upon where the equipment is to be delivered.

The HP-IB Interface

The HP 9121D/S are connected to the computer via the Hewlett-Packard Interface Bus (HP-IB). Refer to the figure below for a list of the HP-IB interface cables used with HP computers.

Length	Accessory Number
1 metre	10833A
2 metres	10833B
4 metres	10833C
.5 metre	10833D

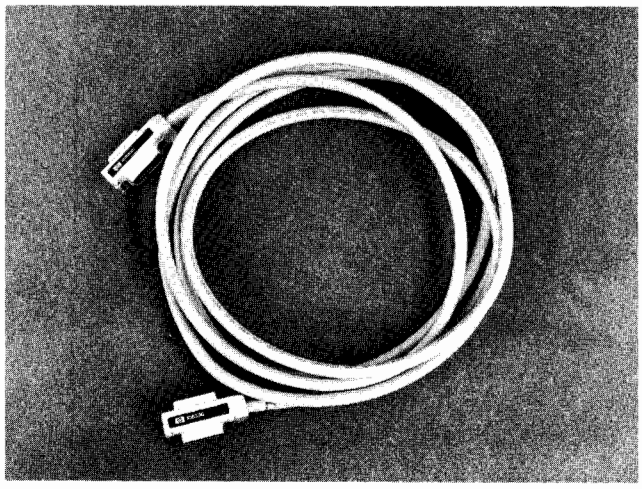

Figure 2-3. HP-IB Interface Cables

HP-IB Interface Restrictions:

1. All the AC line switches must be turned "OFF" when connecting (and disconnecting) devices to your system.
2. The total length of cable permitted in one bus system must be less than or equal to two metres times the number of devices connected together (the interface card is counted as one device).
3. The total length of the cable must not exceed 20 metres. For example, a system containing six devices can be connected together with cables that have a total length less than or equal to 12 metres (six devices x 2m/device = 12 metres). The individual lengths of cable may be distributed in any manner desired as long as the total length does not exceed the allowed maximum. If more than 10 devices are to be connected together, cables shorter than two metres must be used between some of the devices to keep the total cable length less than 20 metres.

4. The maximum number of devices that can be connected together in one bus system is 15.
   There are no restrictions to the way cables may be connected together; however, it is recommended that no more than four piggyback connectors be stacked together on one device. The resulting structure could exert enough force on the connector mounting to damage it.

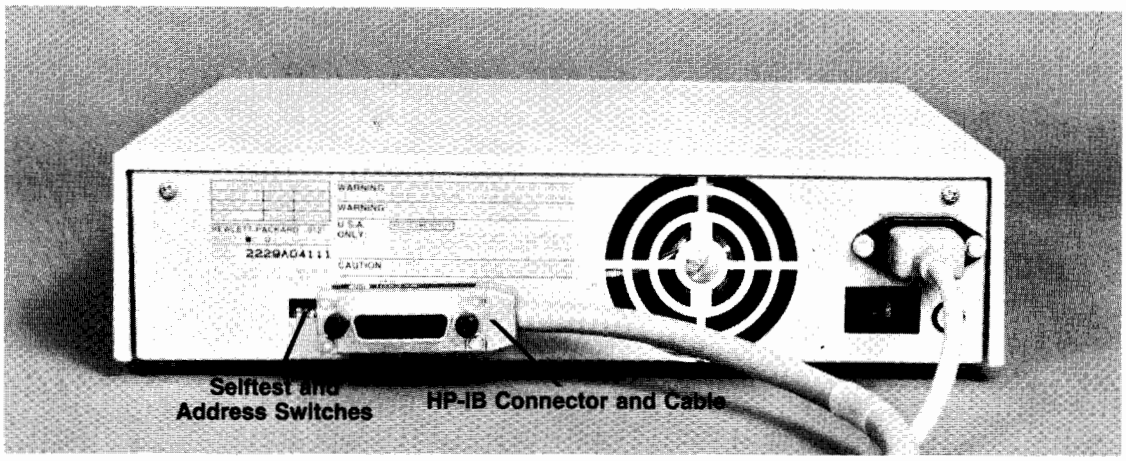

Figure 2-4. Interface Connection

Selecting the Device Address

Each device in an HP-IB system must be set to a unique device address. The 9121D contains two separate drives, but is one device and requires one address. See the mass storage information of your controller for addressing information concerning drive 0 and drive 1. See Figure 2-5 for switch locations.

Prior to setting the device address switches, turn the disc memory AC line switches OFF.

The switches can be set to any one of eight device addresses, ranging from decimal 0 through 7. Refer to Figure 2-5 to set these switches to the desired device address.

	Switch Segments			
Address	Test**	4	2	1
0	Up	DOWN	DOWN	DOWN
1	Up	DOWN	DOWN	UP
2	Up	DOWN	UP	DOWN
3	Up	DOWN	UP	UP
4	Up	UP	DOWN	DOWN
5	Up	UP	DOWN	UP
6	Up	UP	UP	DOWN
7	Up	UP	UP	UP

** = Up for normal operation
Up - Down - Up for selftest.

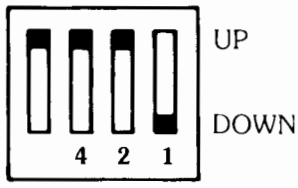

Figure 2-5. Device Address Switch Setting

Controls and Indicators

The controls and indicators are located on the front panel. These controls and indicators, as shown in Figure 2-6, are the following: one disc access light for each drive unit (the disc access lights are illuminated whenever the disc is accessed for data storage or retrieval and momentarily when the drive is powered up), one power ON/OFF switch, and the selftest LED (seen through the air inlet).

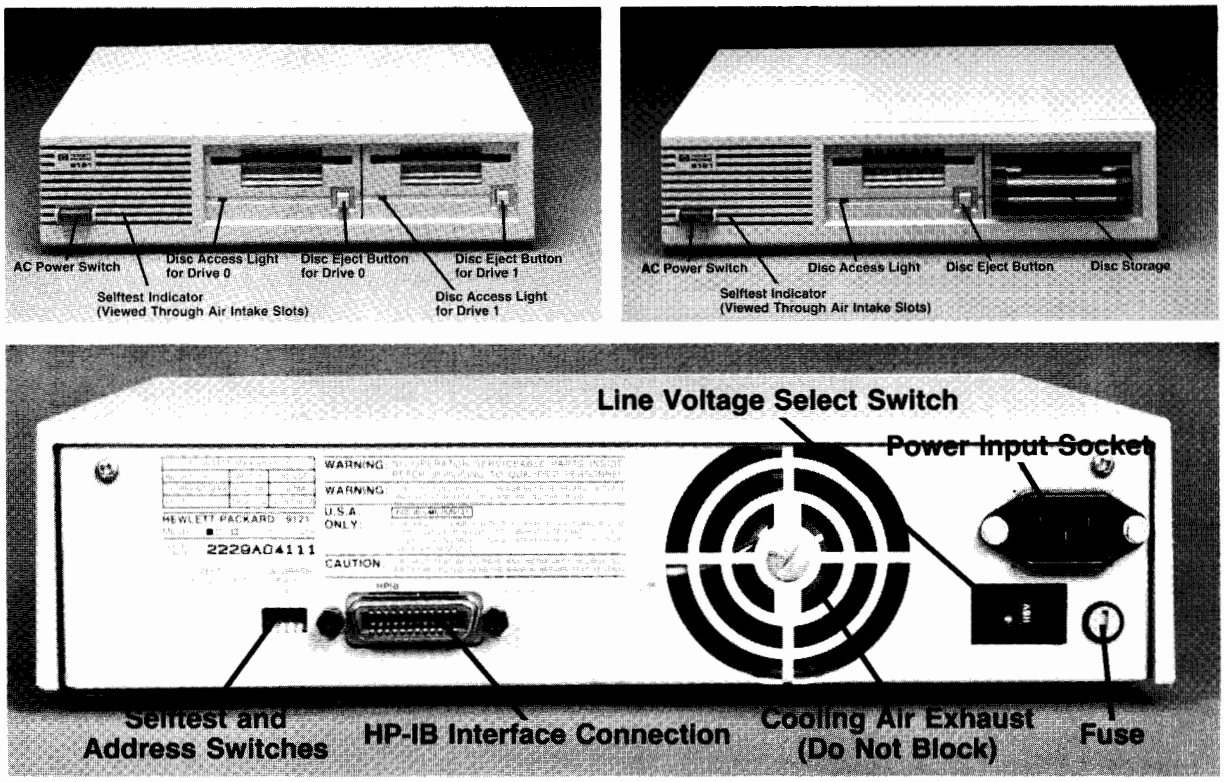

Figure 2-6. Front and Rear Panels

CAUTION

THE ACTIVITY LIGHT ON THE FRONT OF EACH DRIVE INDICATES USEAGE OF THAT DRIVE. DO NOT DEPRESS THE DISC EJECT BUTTON WHEN THE ACTIVITY LIGHT IS ON.

Applying Power

Before turning the disc memory on, be sure to perform all the procedures in the first part of this section.

Locate the AC line switch on the front panel and set it to the "ON" or "1" position. The disc drive requires about 10 seconds after the application of power before it is ready for operation or before you insert your disc. See the section titled "Selftest" for the power-on selftest indication.

Loading the Flexible Disc

To install and remove flexible discs, perform these steps.

1. Do not attempt to insert the disc into the drive without power applied.

Manual Shutter

2. Slide the disc guard away from the head window exposing the disc surface. Insert the exposed head window first with the metal centering hub down. Carefully slide the disc into the drive until you feel it contact the rear of the drive. Do not force the disc.

Auto Shutter

Slide the disc into the drive until you feel it contact the rear of the drive. Do not force the disc.

Remember, either type of disc (manual or auto shutter) will work in either type of drive. If you do not have the auto shutter mechanism in the drive and the disc, you must follow the procedure described with using the manual shutter.

3. Remove the disc by depressing the disc eject button and pulling the disc straight out. Always slide the disc guard over the head window immediately after removing the disc from the drive.

Refer to Figure 2-7 for proper loading of the flexible disc.

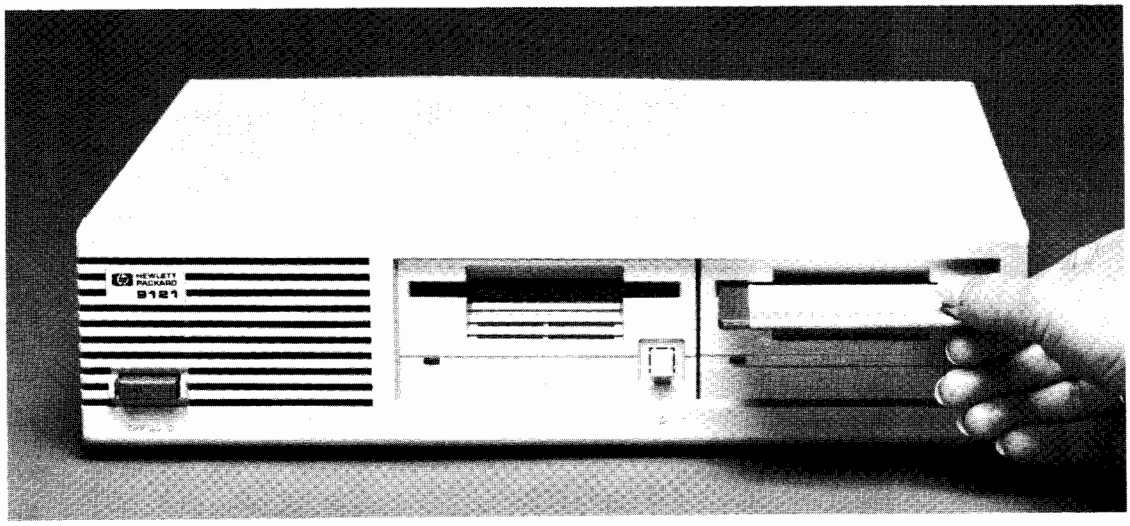

Figure 2-7. Disc Loading

Basic System Operation

Before using a blank flexible disc, it must be formatted or initialized for use with your computer. This process checks the disc for defects (areas where information cannot be stored), reserves spare tracks, and creates a file directory. The directory holds the name and location of each file on the disc. When a disc is first initialized, the directory is empty, so no files are listed when you catalog the disc.

The 9121D/S drive emulates the 82901 drive. Thus, you program it using mass storage ROM or driver statements that your computer manuals describe for the 82901 disc drive.

Write Protect Error on Initialization

A motor speed check is performed when a disc is inserted to be initialized. If the motor speed is on either side of the tolerance allowed, a Write Protect Error is generated and the disc is not initialized. If your drive is operating properly, this indication is one of a defective disc. Discard the disc.

The motor speed should be checked and/or adjusted before discarding the disc. See the section titled "Selftest and Adjustments".

Data Errors

Two error conditions cause the selftest LED to come on and stay on until the condition disappears. These conditions are a command sequence-error over the HP-IB (from the host controller) and a data error from the disc. Whenever these conditions occur it is best to retry the last operation. If a retry is successful, the error and error indication are cleared. If the condition remains after several retries, perform the service selftest and or the remote selftest to determine the cause of the error condition.

Chapter 3
Interface Information

Introduction

This chapter presents an overview of the HP-Interface Bus. The command set for controlling the HP 9121D/S disc is presented in the Appendix. You should be thoroughly familiar with the appropriate Input/Output (I/O) operations of your computer before using the HP 9121D/S disc memories.

Overview of the HP-Interface Bus

The following is the definition of the terms and concepts used to describe HP-IB system operations.

HP-IB System Terms:

1. Byte - A unit of information consisting of eight binary digits (bits).
2. Device - Any unit that is compatible with the IEEE Standard 488-1975.
3. Device Dependent - A response to information sent on the HP- IB that is charactistic of an individual device's design and may vary from device to device.
4. Operator - The person who operates either the system or any device in the system.
5. Addressing - The characters sent by a controlling device to specify which device will send information on the bus and which device(s) will receive that information.
6. Polling - The process typically used by a controller to locate a device that needs to interact with the controller. there are two types of polling:

   Serial Poll - This method obtains one byte of operational information about an individual device in the system. The process must be repeated for each device from which information is desired.

   Parallel Poll - This method obtains information about a group of devices simultaneously.

Interface Bus Concepts:

Devices which communicate along the interface bus can be classified into three basic categories:

1. Talkers - Devices which send information on the bus when they have been addressed.

2. Listeners - Devices which receive information sent on the bus when they have been addressed.
3. Controllers - Devices that can specify the talkers and listeners for an information transfer. Controllers can be categorized as one of two types:

   Active Controller - The current controlling device on the bus.

   System Controller - The controller that can take priority control of the bus even if it is not the current active controller. Although each bus system can have only one system controller, the system can have any number of devices capable of being the active controller.

Message Concepts:

Devices which communicate along the interface bus are transferring quantities of information. The transfer of information can be from one device to another device, or from one device to more than one device. These quantities of information can be thought of as "messages". Typically, each message consists of two basic parts; the address portion specified by the controller and the information that comprises the message.

In turn, the messages can be classified into 12 types. The 12 types messages are defined as follows:

1. The Data Message:
   This is the actual information which is sent from one talker to one or more listeners along the interface bus. Data can be in either numeric form or a string of characters.
2. The Trigger Message:
   This message causes the listening device(s) to perform a device-dependent action.
3. The clear Message:
   This message causes either the listening device(s) or all of the devices on the bus to return to their predefined device-dependent states.
4. The Remote Message
   This message causes the listening device(s) to switch from local front-panel control to remote program control.
5. The Local Message:
   This message clears the Remote Message from the listening device(s) and returns the device(s) to local front-panel control.
6. The Local Lockout Message:
   This message prevents the operator from manually inhibiting remote program control.
7. The Clear Lockout and Set Local Message:
   This message causes all devices on the bus to be removed from local lockout and revert to local. This message also clears the Remote Message for all devices on the bus.
8. The Request Service Message:
   A device can send this message to signify that the device needs some type of interaction with the controller. This message is cleared by the device's Status Byte Message if the device no longer requires service.

9. The Status Byte Message:
   A byte that represents the status of a single device on the bus. One bit indicates whether the device sent a Request Service Message and the remaining bits indicate operational conditions defined by the device. This byte is sent from a talking device in response to a serial poll operation performed by a controller.
10. The Status Bit Message:
    A byte that represents the operational conditions of a group of devices on the bus. Each device responds on a particular bit of the byte thus identifying a device-dependent condition. This bit is typically sent by devices in response to a parallel poll operation.
11. The Pass Control:
    This transfers the bus management responsibilities from the active controller to another controller.
12. The Abort Message:
    The system controller sends this message to unconditionally assume control of the bus from the active controller. This message terminates all bus communications but does not implement a Clear Message.

These messages represent the full implementation of all HP-IB system capabilities. Each device in a system, however, may be designed to use only the messages that are applicable to its purpose in the system. It is important for you to be aware of the HP-IB functions implemented on each device connected to your HP-IB system to ensure the operational capability of the system.

Chapter 4
Troubleshooting

Introduction

This chapter provides the physical location of key components, power supply circuit diagrams, power supply theory and troubleshooting, and a list of replaceable parts.

The following topics are discussed in this chapter:

Repair Philosophy
- Exchange Assemblies
- Non-exchange Assemblies

Support Packages Contents Lists
- Product Support Package (PSP)
- Field Support Inventory Package (FSI)

Recommended Field Support Inventory

Controller Electronics and Power Supply Assembly
- Power Supply
- Troubleshooting the Power Supply

Repair Philosophy

The 3 1/2-inch Disc Drive assemblies are serviced on the exchange program. The assembly includes the drive and drive electronics board (the PC board attached to the lower side of the drive).

The selftest and alignment procedures are given to enable you to isolate problems and correct misalignment in the field.

Power supply information is presented in each tabbed section. Controller assembly detailed information is not presented.

Exchange Assemblies

The following assemblies are exchange assemblies:

3 1/2-inch Flexible Disc Drive -- 09121-69511
Controller/Power Supply Assembly -- 09121-69510

Non-exchange Assemblies

The following assembly is not exchangeable

Fan Assembly -- 09121-68501

Support Packages Contents Lists

The following packages lists are the contents for the PSP and the FSI.

Product Support Package (PSP) -- 09121-67100

09121-88810 -- Pad Weight
8710-1518 -- Radial Alignment Tool
09121-89400 -- Disc, Alignment
09121-89401 -- Disc, Level
09121-89405 -- Disc, Cleaning
8750-0051 -- Gauge, Tension
5061-2808 -- HP-85 Test Package
09121-90030 -- Manual, Service

Field Inventory Parts Package (FSI) -- 09121-67197

09121-69510 -- Controller/Power Supply Assembly (9121)
09133-66500 -- Controller Assembly (9133)
09121-69511 -- 3 1/2-inch Flexible Disc Drive
09121-68501 -- Fan Assembly
09121-88811 -- Pad, Head Load
2110-0587 -- Fuse, 2A

Recommended Field Service Inventory

The following list of parts and assemblies is recommended for building your Field Service Inventory (FSI).

09121-69511 -- 3 1/2-inch Flexible Disc Drive
09121-69520 -- Controller/Power Supply Assembly (9121)
09133-66500 -- Controller Assembly (9133)
09121-68501 -- Fan Assembly

Controller Electronics and Power Supply Assembly

The controller electronics and power supply sections of the printed circuit assembly are presented in the next drawing. Along with the key components, the selftest control points are also labeled.

Power Supply

The power supply generates four voltages: + 12, + 5, -12, and a raw 22 VAC for fan operation. The + 12 and + 5 each originate from their own secondary winding of the transformer and are rectified and regulated independently. Each of these secondaries are fused. The fuses are located on the PC board in the power supply area.

The -12 V (which is normally -10 V) is taken from the same secondary that drives the + 5 V. This source is run through a voltage doubler and then clamped with a 12 V zener. The fan gets its power from the same source that drives the + 12 V. This voltage is taken directly from the secondary which is 22 VAC. See Table 4-1 for the power supply specifications.

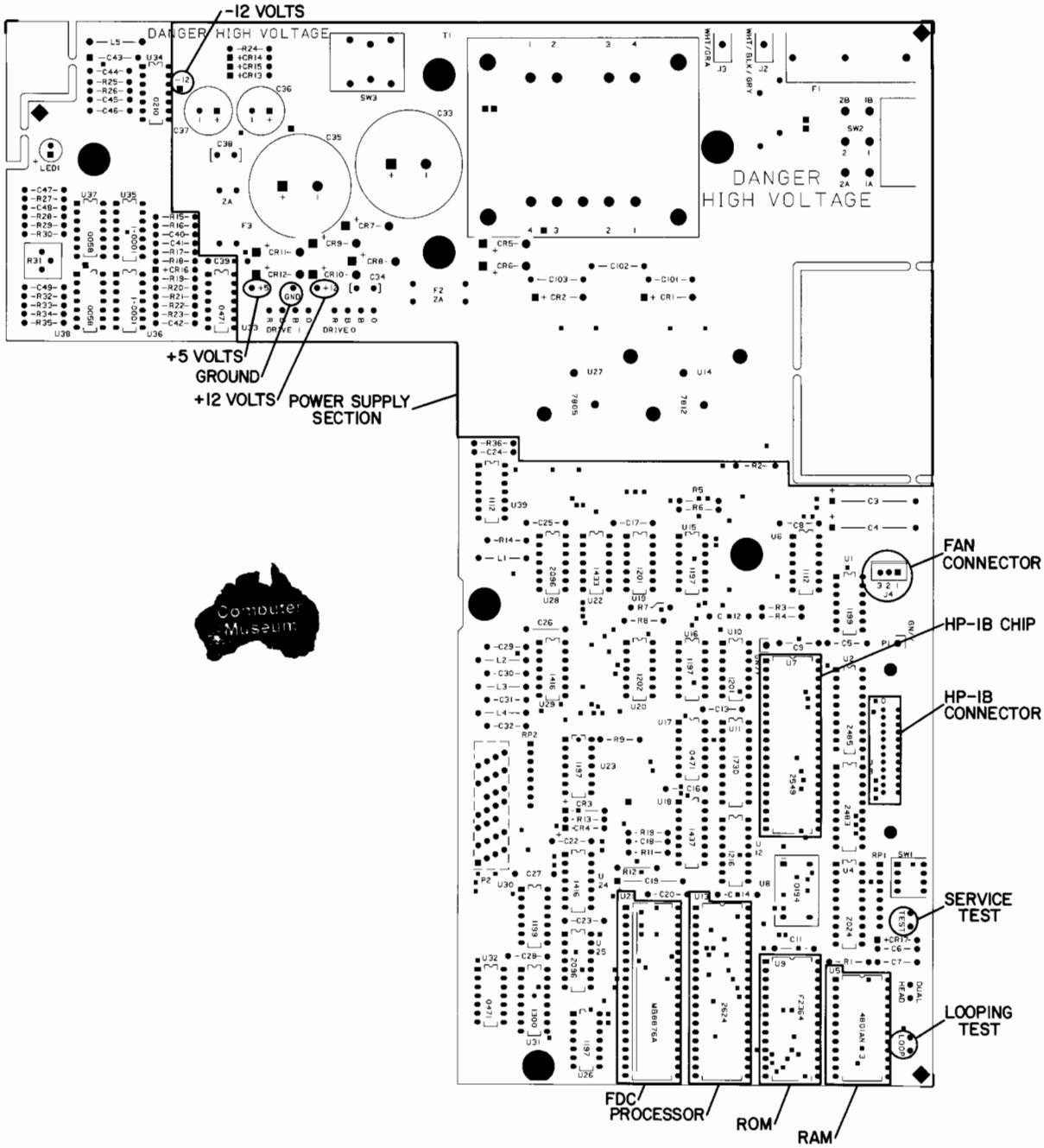

Figure 4-1. Controller and Power Supply Assembly

Table 4-1. Power Supply Specifications

Total Power Requirements
0.75 Amps Max. at 125 Volts AC, 48-66 Hertz
0.375 Amps Max. at 250 Volts AC, 48-66 Hertz

+ 5 V ± 5% 1.55 Amps Typ.
+ 12 V ± 5% 0.85 Amps Typ.

Controller Electronics Assembly
+ 5 V 0.7 A typical, voltage tolerance: ± 5%
+ 12 V 0.10 A typical, voltage tolerance: ± 5%

Dual Drive Assembly
+ 5 V 0.8 A typical, voltage tolerance: ± 5%
+ 12 V 0.8 A typical, voltage tolerance: ± 5%

DC Power Provisions
Output
+ 5 V ± 5% 2 Amp Continuous
+ 12 V ± 5% 1 Amp Continuous

Ripple and Noise
10 mV pp (20 Hz to 20 M Hz)

Power Line Sag
25 msec @ 115/230 VAC
11 msec @ 86/195 VAC

Troubleshooting the Power Supply

The following items should be checked in the following order if you are having power supply problems. See the following power supply schematic and component locator.

- There are three fuses associated with the 9121D/S supply
  1. The line voltage fuse F1 located on the rear panel.
  2. Both secondaries of the transformer have fuses in the circuits. These fuses are located on the PC board in the power supply section.
- The +12 and + 5 volt supplies should be within 5% on their expected voltages. The -12 volt supply should be between -12 and -6 volts.
- The absolute minimum voltage allowed at the junction of CR11 and CR12 is 7 V. This voltage would normally be approximately 10 V. The absolute minimum voltage allowed at the junction of CR7 and CR8 is 14 V. This voltage would normally be approximately 22 V.
- Rectifiers are more likely to fail than the regulators.

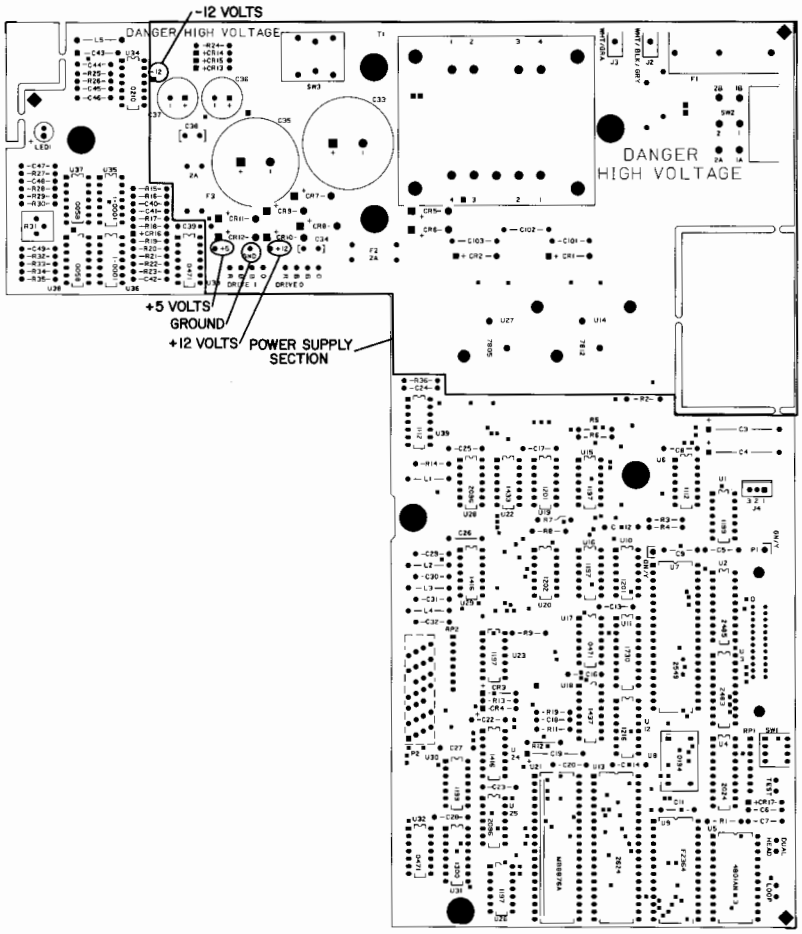

Figure 4-2. Power Supply Component Locator

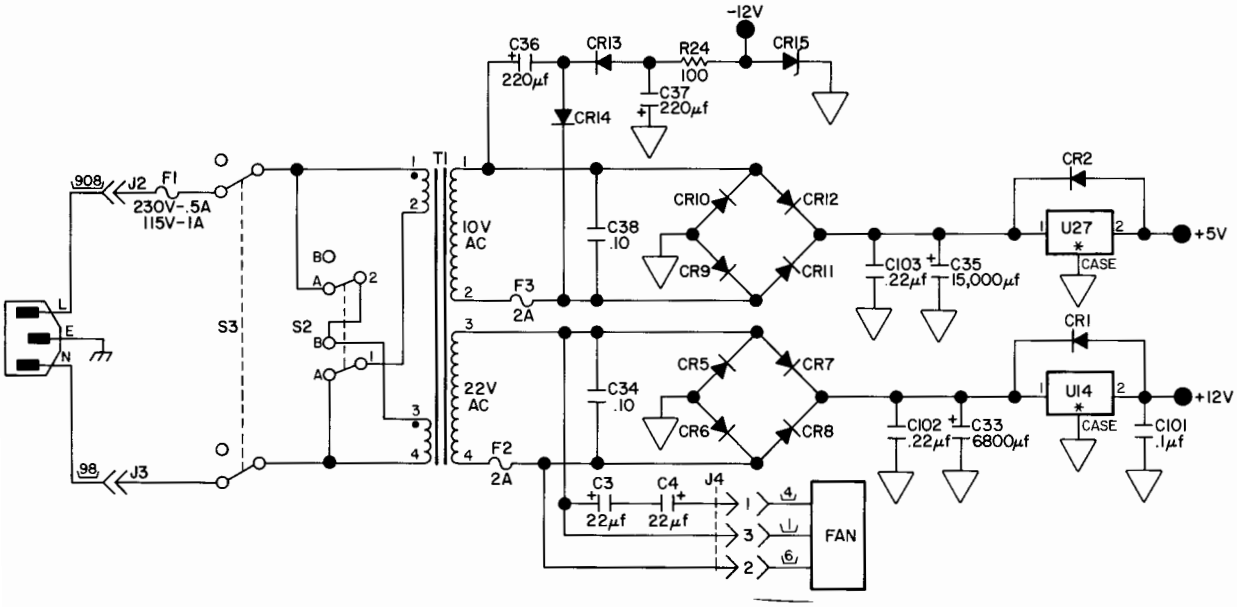

Figure 4-3. Power Supply Schematic Diagram

Chapter5
Assembly Access

Introduction

This chapter provides information for disassembly of the 9121D/S disc memories. An exploded view is also provided with the instructions. The exploded view references part numbers that are listed in the replaceable parts section.

The following topics are discussed in this chapter:

Safety Considerations
Top Cover Removal
Drive Removal
Fan Removal
Printed Circuit Assembly Removal
9121D/S Parts Lists

The following tools are required for disassembly and reassembly of the disc memories.

#2 Posidrive Screwdriver
#1 Posidrive Screwdriver
9/32 Nut Driver
Needlenose Pliers

Safety Considerations

General

This product and related documentation must be reviewed for familiarization with safety markings and instructions before operation.

Safety Symbols

Instruction manual symbol: the product will be marked with this symbol when it is necessary for the user to refer to the instruction manual in order to protect the product against damage.

Indicates hazardous voltages.

Indicates earth (ground) terminal (sometimes used in manual to indicate circuit common connected to grounded chassis.

WARNING

The WARNING sign denotes a hazard. It calls attention to a procedure, practice, or the like, which, if not correctly performed or adhered to, could result in injury. Do not proceed beyond a WARNING sign until the indicated conditions are fully understood and met.

CAUTION

The CAUTION sign denotes a hazard. It calls attention to an operating procedure, practice, or the like, which if not correctly performed, could result in damage to or destruction of part or all of the product. Do not proceed beyond a CAUTION sign until the indicated conditions are fully understood and met.

Safety Earth Ground

This is a safety class I product and is provided with a protective earthing terminal. An uninterruptible safety earth ground must be provided from the main power source to the product input wiring terminals, power cord, or supplied power cord set. Whenever it is likely that the protection has been impaired, the product must be made inoperative and be secured against any unintended operation.

Before Applying Power

Verify that the product is configured to match the available main power source per the input power configuration instructions provided in this manual. Also, check the fuse to ensure that the correct fuse is installed for the power configuration being used.

If this product is to be energized via an auto-transformer (for voltage reduction), make sure the common terminal is connected to the earth terminal of the main power source.

Servicing

Any servicing, adjustment, maintenance or repair of this product must be performed only by service-trained personnel.

Adjustments described in this manual may be performed with power supplied to the product while protective covers are removed. Energy available at many points may, if contacted, result in personal injury.

Capacitors inside this product may still be charged even when disconnected from its power source.

To avoid a fire hazard, only fuses with the required current rating and of the specified type (normal blow) are to be used for replacement.

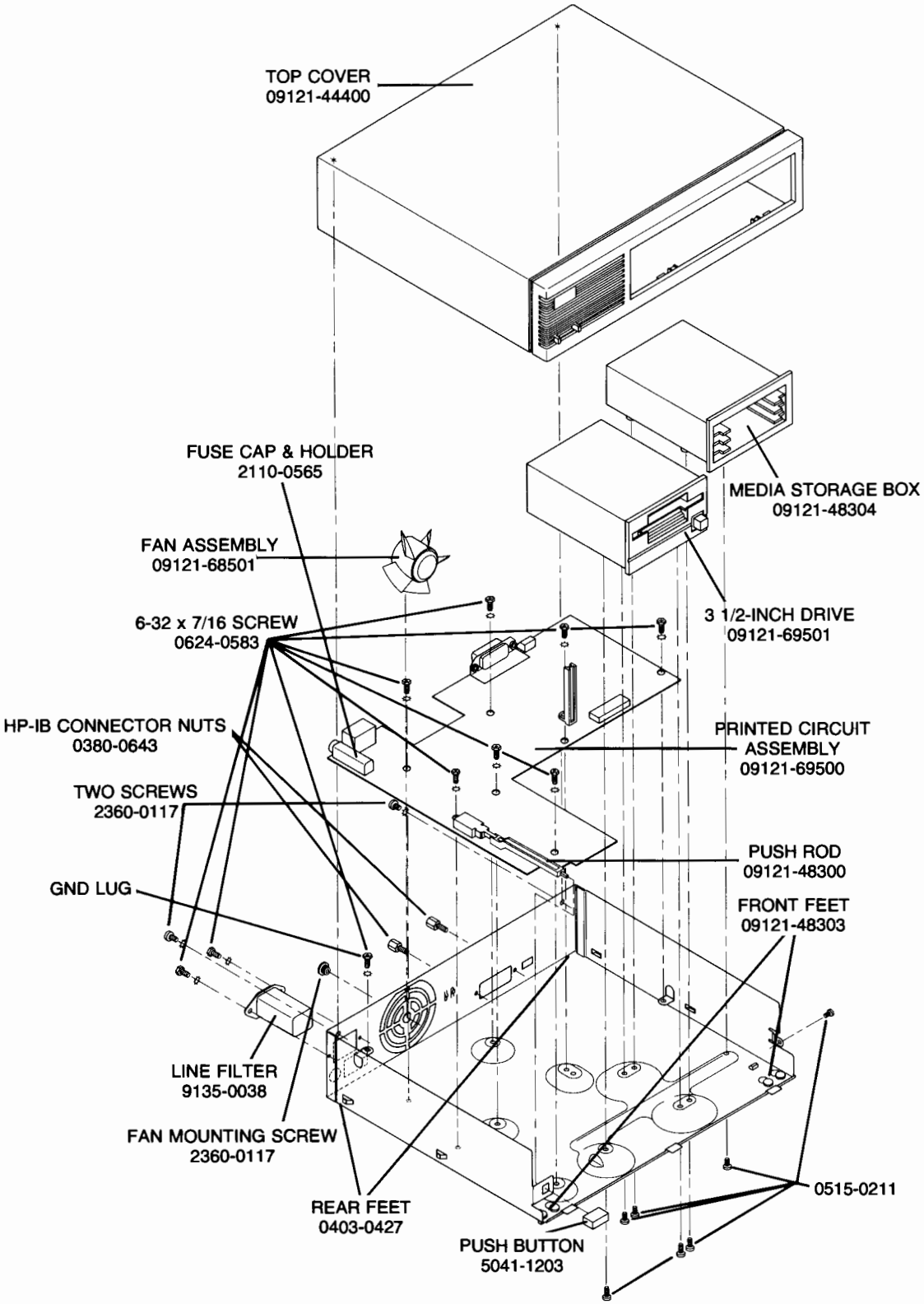

Figure 5-1. HP 9121D/S Disc Memory Exploded View

Top Cover Removal

To access the internal assemblies, the top cover must first be removed. Performing the following steps allows you to remove the top cover.

- Power cord disconnected
- Remove the rear panel two screws
- Press power switch to the on position (this clears the switch from the front panel or remove the switch by pulling it straight out the front
- Rotate the rear of the case up and toward the front as soon as it clears the chassis. See the following figure.
- Assembly is the reverse of the above process. See the following note.

NOTE

The three plastic guides must be in position under the drives and PC assembly before the top case is rotated downward.

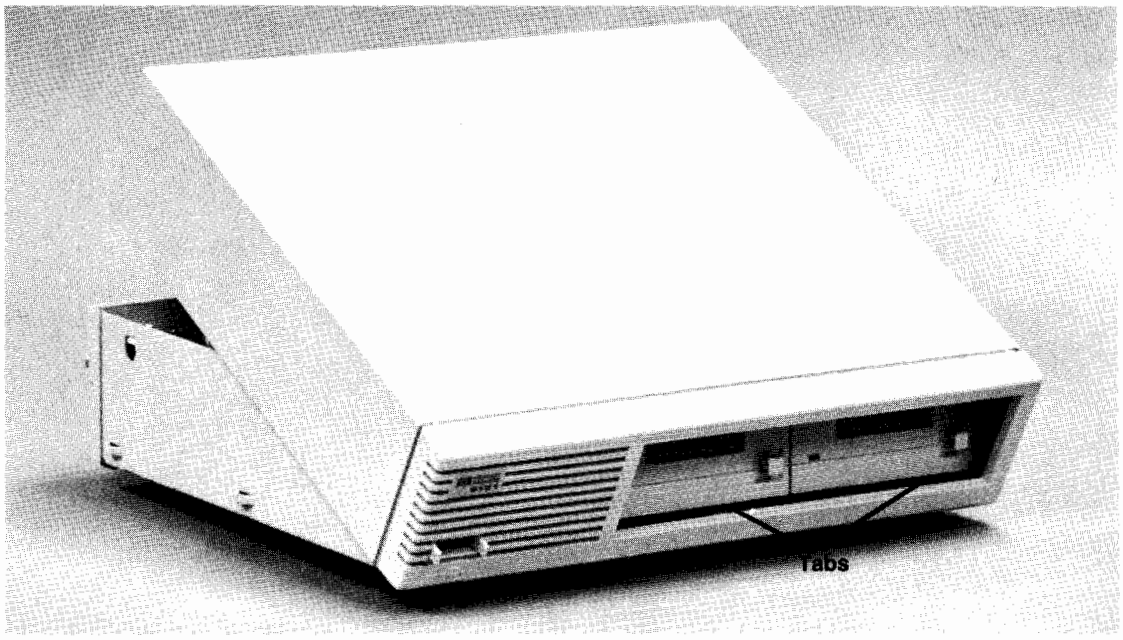

Figure 5-2. Top Cover Removal

Drive Removal

Each drive is attached with three screws and there are two cables connecting each drive. Drive 0 is attached with three screws up through the bottom of the chassis. Drive 1 (the second drive on the 9121 D) is attached using two screws through the bottom of the chassis and one in from the middle of the side.

Removal of these three screws and the two cables removes the drives. Patch Lok or a securing device is to be used on these screws when the drives are installed.

CAUTION

CAUTION MUST BE USED WHEN REINSTALLING THE CONNECTORS TO THE DRIVES. IT IS POSSIBLE TO MISSALIGN THE PINS WHEN INSTALLING THE CONNECTORS.

Fan Removal

The fan assembly is attached using one screw through the rear panel. Removing this screw and the wire cable and connector removes the fan assembly.

Printed Circuit Assembly Removal

To remove the printed circuit assembly complete the following steps.

Remove the two power input leads from the line filter to the PC assembly. These wires are color coded and the codes are marked on the PC board; also, some units will have different width spade lugs. DO NOT GET THESE WIRES REVERSED when they are reattached.

Remove the seven screws attaching the PC assembly to the chassis.

Remove the two screws attaching the HP-IB connector to the rear panel.
Lift the PC assembly from the chassis.

9121D/S Parts Lists

This section contains the replaceable parts lists for the 9121D/S. The CD column is required when ordering a part from HP. Please include this check digit number with your order.

Level	Reference Designator	HP Part No.	CD	Description
1	A1	09121-69510	3	CTLR-PWR BD
.2	C3,4	0180-1794	3	C-F 22UF 35V
.2	C5-8,11-13,16, 17,23,25-28	0160-4832	4	C-F .01UF 10 %
.2	C9,13,14, 20,22,39	0160-4832	4	C-F .01UF 10 %
.2	C18,29-32,48,49	0160-5349	0	C-F 200PF 5 %
.2	C19	0180-1746	5	C-F 15UF 20V
.2	C33	0180-3260	2	C-F 6800UF 50V
.2	C34,38	0160-3622	8	C-F .1UF 100V
.2	C35	0180-3007	5	C-F .015F 25V AL
.2	C36,37	0180-0692	8	C-F 220UF 35V AL
.2	C40	0160-4805	1	C-F 47PF 5 % 100V
.2	C41	0160-4830	2	C-F 2200PF 10 %
.2	C42	0160-4574	1	C-F 1000PF 10 %
.2	C43	0180-0291	3	C-F 1UF 35V 10 %
.2	C44,46,47,101	0160-4835	7	C-F .1UF 10 % 50V
.2	C102,103	0160-5098	6	C-F .22UF 10 %
.2	CR1,2	1901-0731	7	DIODE IN 4004

.2	CR3,4,13, 14,17	1901-0050	3	DIO SWITCHING
.2	CR5-12	1901-0673	6	DIO-PWR RECT
.2	CR15	1902-0029	8	DIO-ZNR 12V 5 %
.2	CR16	1901-0518	8	DIO-SM-SIG-S
.2	F1	2110-0001	8	FUSE 1A 250V
.2	F1	2110-0565	9	CAP-FUSE HOLDER
.2	F1	2110-0642	3	FUHLR-EXTR POST
.2	F2,3	2110-0587	5	FUSE 2A 250V
.2	F2,3	2110-0589	7	FUHLDR-CLIP TYPE
.2	J2,3	1251-7821	1	CONN-SGL CONT
.2	J4	1251-6429	3	CONN-POST-TY-HDR
.2	L1-4	9140-0183	7	IDCTR 20UH 10 %
.2	L5	9100-0539	3	IDCTR (MSIC)
.2	LED1	1990-0450	4	LED-LMP
.2	P2	09121-61601	5	RIBBON CBL ASSY
.2	R1,9	0683-1025	9	R-F 1K 5 % .25W
.2	R2,24	0683-1015	7	R-F 100 OHM .05
.2	R3-6,10,14, 15,18,36	0683-1025	9	R-F 1K 5 % .25W
.2	R7,8,17,30,34	0757-0442	9	R-F 10K .01 1/8W
.2	R11	0757-0430	5	RES 2.21K 1 %
.2	R12	0698-3154	0	R-F 4.22K 1 %
.2	R13	0698-3152	8	R-F 3.48K 1 %
.2	R16,35	0698-3154	0	R-F 4.22K 1 %
.2	R19,21,32,33	0698-3445	2	R-F 348 OHM 1 %
.2	R20,22	0757-0280	3	RES 1K 1 % .125W
.2	R23,27	0698-3442	9	R-F 237 OHM 1 %
.2	R25,28,29	0757-0417	8	R-F 562 OHM 1 %
.2	R26	0698-3132	4	R-F 261 OHM .01
.2	R31	2100-0554	5	R-V 500 OHM 10 %
.2	RP1,2	1810-0204	6	NTWK-R 7X1K SIP
.2	SW1	3101-2264	1	SW-RKR 4-1A
.2	SW2	3101-2582	6	SW,LINE SELECT
.2	SW3	3101-0680	1	SW-PB-DPDT
.2	T1	09121-82500	7	TRANSFORMER
.2	T1	09121-82501	8	XFMR-SUPPORT
.2	U1,30	1820-1199	1	IC-74LS04
.2	U2	1820-2485	0	IC SN75160N
.2	U3	1820-2483	8	IC SN75161N
.2	U4	1820-2024	3	IC-SN74LS244
.2	U5	1818-1178	1	IC MK 4118AN-3
.2	U6,39	1820-1112	8	IC-74LS74
.2	U7	1820-2549	7	IC-8291AP
.2	U8	1813-0194	9	XTAL-CLK-OSC
.2	U9	09121-15510	8	SONY CTRL E PROM
.2	U10,19	1820-1201	6	IC-SN74LS08N
.2	U11	1820-1730	6	IC SN74LS273N
.2	U12	1820-1216	3	IC-SN74LS138
.2	U13	1820-2624	9	IC-68B09
.2	U14	1826-1014	1	IC, REG. 12V 3A
.2	U15,16,23,26	1820-1197	9	IC-74LS00
.2	U17,32,33	1820-0471	0	IC-SN7406N
.2	U18	1820-1437	0	IC-SN74LS221
.2	U20	1820-1202	7	IC-74LS10N
.2	U21	1820-3006	3	IC-MB8876A CTLR
.2	U22	1820-1433	6	IC SN74LS164N

.2	U24,29	1820-1416	5	TTL TRGR 74LS14N
.2	U25,28	1820-2096	9	IC SN74LS393N
.2	U27	1826-0181	1	V RGTR LM323K
.2	U31	1820-1300	6	IC SN74LS195N
.2	U34	1826-0210	7	IC-LM361
.2	U35,36	1821-0001	4	XSTR-ARRAYCA3046
.2	U37,38	1858-0058	8	XSTR ARY 16P-DIP
1		0360-0001	5	TERM-SLDR 1.U9
1		0362-0616	2	CONN-SGL CONT
1		0380-0643	3	NUT # 6-32/M 3.5
1		0403-0427	1	BUMPER FOOT
1		0515-021	8	SCR-MACH M3X0.5
1		0624-0583	8	SCREW,6-32X7/16
1		0890-0029	0	TUBING-HT SHRIN
1		0890-0765	1	TBG-HT SHRK .18
1		09121-00100	1	BASE
1		09121-48300	3	PUSH ROD,PLASTIC
1		09121-48301	4	BUTTON, PUSH
1		09121-48302	5	PILLAR, SUPPORT
1		09121-48303	6	FOOT-MOLDED
1		0590-0305	9	NUT-HEX 6-32
1		09121-61602	6	PWR CBL ASSY
1		1205-0500	2	HEATSINK
1		1205-0503	5	XSTR MOUNT T03
1		1251-7651	5	CONN 24-PIN M
1		2200-0107	6	SCR-MACH 4-40
1		0360-0124	3	STUD-TERM
1		1200-0861	8	SKT-IC 28-CONT
1		8150-3284	5	WIRE 18 G/Y
1		0340-0122	9	INSUL-FLG-BSHG
1		1818-3188	7	2364 ROM
1		2200-0205	5	SCREW-MACHINE
1		7120-4296	7	LABEL-WARNING
1		7120-6830	9	LABEL INFO
1		09121-69511	8	FLPY DR. 3 1/2IN
1		1251-5987	6	CONN-POST-TP-SKT
1		2190-0409	8	WSHR-LK INTL
1		2360-011	6	SCR-MACH 6-32
1		3050-001	2	WSHR-FL MTLC
1		09121-68501	1	AXIAL FAN
1		7120-3428	5	LABEL-IDENT(CSA)
1		7120-3694	7	LABEL "UL"
1		7120-8795	9	LABEL ENGLISH
1		7124-2083	4	LABEL-WARNING
1		8150-041	7	WIRE 18 W/GY
1		8150-1273	8	WIRE 18 W/BK/GY
1		8150-3284	5	WIRE 18 G/Y
9121S Only				
1		09121-48304	7	Media Storage BX
1		09121-88865		Top Cover Assy
.2		09121-44400	6	Cover Plastic
.2		09121-00610	8	EMI Shield
.2		0590-0681	4	NUT-SHMET-U-TP

Computer Museum

Section III
HP 9133 Disc Memory

This section contains information on the 3 1/2-inch Flexible Disc Drive installation in the HP 9133 Disc Memory. For information about the Winchester Drive, see the 9135-90030 service manual.

This section contains the following chapters.

Chapter 1 General Information
Chapter 2 Installation
Chapter 3 Interface Information
Chapter 4 Troubleshooting
Chapter 5 Assembly Access

Chapters 1 through 3 contain general information on the 9133 Disc Memory. Chapters 4 and 5 zero in on the 3 1/2-inch installation as pertaining to the 9133. Winchester Drive information is not found in these chapters of this manual.

Chapter 1
General Description

Introduction

This chapter contains general information the HP 9133 disc Memory. Included in this section is the following:

Product Description
Specifications
Equipment Supplied
Unpacking Your HP 9133 Disc Memory
Cleaning the Case

Computer Museum

Product Description

The HP 9133A disc memory (Figure 1-1) is a random access data storage device which contains a 5 Mbyte 5 1/4-inch Winchester disc drive and a 3 1/2-inch flexible disc drive.

The Winchester drive has been designed to emulate an HP 9895A 8 inch flexible disc drive master with three slave drives (1.15 Mbytes per drive). The 3 1/2-inch flexible disc emulates the HP 82902M 5 1/4-inch flexible disc drive with 286 Kbytes of data storage capacity. Thus, HP computers that support the 9895A and 82902M flexible disc drives can operate the 9133A.

The HP 9133A Option 010 consists of a modification to the Winchester controller PCA which causes the Winchester drive to appear as one large 4.82 Mbyte volume. The Winchester with option 010 responds to most of the commands used on the 9895A flexible disc drive.

Refer to your computer's Mass Storage Manual for programming information for the HP 82902M and 9895A flexible disc drives.

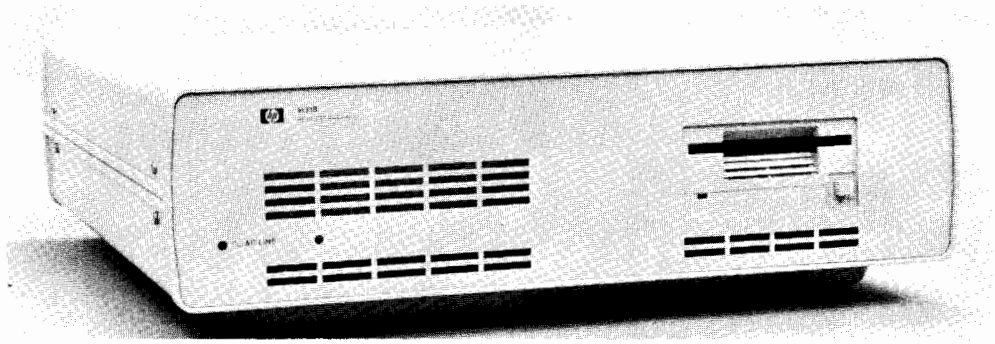

Figure 1-1. HP 9133A Disc Memory

Technical Specifications

Listed below are the physical, electrical, and environmental specifications for the HP 9133A disc memory.

Physical	
Number of Drives:	1 - Winchester, 1 - 3 1/2-inch flexible disc
Net Weight:	15.5 kg (34.7 lbs)
Height	130 mm (5.125 in.)
Depth	476 mm (18.7 in.)
Width	425 mm (17 in.)
Electrical	
Power Source Requirements:	140 Watts
Line Frequency:	48 Hz to 66 Hz
Environmental	
Operating Temperature:	10° to 40° C (50° to 104° F)
Operating Humidity:	20 to 80%
Max. Wet Bulb Temperature:	25.5 C
Storage Humidity:	5 to 95% (non-condensing)
Operating Altitude:	0 to 4600 m (0 to 15,000 ft)
Storage Temperature:	-40° to 60° C (-40° to 140° F)
Storage Altitude:	-300 to 15,200 m (-1000 to 50,000ft)
Winchester Drive	
Formatted Storage Capacity:	4.6 Mbytes (4.82 Mbytes - Option 010)
Average Access Time:	90 ms
Maximum Access Time:	210 ms
Data Transfer Rates	
Sustained Average:	46 Kbytes/second
System:	System Dependent
Rotational Speed:	3600 RPM ± 1%
3 1/2-inch Flexible Disc Drive	
HP Double Density Format	
Encoding:	MFM
Rotational Speed:	600 RPM
Bit Density @600 RPM:	Track 69 (Inside track) 7610 BPI
Track Density:	135 tracks per inch
Tracks per Surface:	70
Surfaces used per disc:	1
Capacity	
Bytes/Sector:	256
Sectors/Track:	16
Tracks:	70
Bytes/Drive (Formatted):	286 Kbytes
Access Time	
Track-to-Track Seek:	15 ms/track, plus 15 ms settling
Maximum Track-to-Track Seek (70 tracks):	1065 ms
Average Track-to-Track:	365 ms
Maximum Rotational Latency:	100 ms
Average Rotational Latency:	50 ms
Spindle Motor on time:	1 second

Maximum Data Access Time (Seek plus Latency plus Motor on time):	2.165 second
Average Data Access Time:	415 ms
Data Transfer Rates:	(3 1/2-inch flexible disc only)

Interleave	Avg. Transfer Rate (Kbytes/second)
1	2.6
2	17.1
3	12.1
4	9.3
5	7.6
6	6.4
7	5.5
8	4.8
9	4.3
10	3.9
11	3.5
12	3.2
13	3.0
14	2.8
15	2.6

Average data rate for a multiple-track read or write.

Interleave for the Winchester is preset at the factory and cannot be changed.

NOTE

The flexible disc drive in the HP 9133A disc memory is designed for operation in a typical office environment. Use of the equipment in an environment containing corrosive substances will cause the flexible disc drive and media life to be drastically reduced.

Equipment Supplied

Please check to insure that you have received all of the standard equipment. If any items are incorrect or missing, please contact the dealer from whom you purchased the unit.

Description	Quantity		HP Part Number
Power Cable	1		Dependent on location (see Chapter 2)
Operator's Manual	1		09134-90000
Fuse	1	100 to 120VAC 2.5 Amp	2110-0083
	1	220 to 240VAC 1.5 Amp	2110-0043

A package of ten 3 1/2-inch flexible discs can be ordered using the 92191A product number.

A field upgrade kit adding the auto shutter is available under P/N 09121-88875.This kit contains the auto shutter mechanism and instructions for installation and alignment.

Unpacking Your HP 9133A Disc Memory

Your disc memory was carefully inspected before shipment. Remove the unit from the shipping carton and carefully inspect the unit for any physical damage that may have occurred during shipment. If you find any damage, you should immediately notify your dealer and file a claim with any carriers involved.

CAUTION

THE DISC MEMORY IS A PRECISION INSTRUMENT. MECHANICAL SHOCK CAN MISALIGN THE READ/WRITE HEADS, RESULTING IN READ ERRORS AND/OR DAMAGED DISCS WHETHER THE DISC IS OPERATING OR NOT.

If the disc memory is moved, be careful when picking it up and setting it down.

Carefully repack the disc memory in the original shipping carton before transporting it to another site.

CAUTION

EVIDENCE OF EXCESSIVE SHOCK WILL VOID THE WARRANTY.

Cleaning the Case

The disc memory case has been painted with a durable, non-toxic paint. It will preserve the appearance of your disc memory for many years. When you want to clean the case, following the instructions below will sustain the quality finish. If the case finish should become damaged, consult your local Hewlett Packard sales and service office for touch up paints that are available.

CAUTION

CHEMICAL SPRAY-ON CLEANERS USED FOR APPLIANCES AND OTHER HOUSEHOLD AND INDUSTRIAL APPLICATIONS MAY DAMAGE THE CASE FINISH. THESE OR OTHER CHEMICAL CLEANERS SHOULD NOT BE USED. DO NOT USE DETERGENTS THAT CONTAIN AMMONIA, BENZENES, CHLORIDES, OR ABRASIVES.

Before cleaning the disc memory case, disconnect the power cord and any interconnecting cables. Dampen a clean, soft, lint-free cloth in a solution of clean water and mild soap. Wipe the soiled areas of the case, ensuring that no cleaning solution gets inside the unit. For cleaning more heavily soiled areas, a solution of 80% clean water and 20% isopropyl alcohol may be used. Wipe the case areas that had cleaning solution applied with a clean, soft, lint free cloth dampened in clean water, then dry the case with a dry, soft, clean cloth. A non-abrasive eraser may be used to remove pen and pencil marks.

Chapter 2
Installation

Introduction

This section provides the installation and initial power-on procedures for the HP 9133. The topics covered in this section are as follows:

Setting the Line Voltage Select Switches
Fuses
Power Cords
Interfacing the HP 9133A to Your System
  Selecting the Device Address
  The HP-IB Interface
Controls and Indicators
Applying Power
Loading the Flexible Disc
  Manual Shutter
  Auto Shutter
Basic System Operation
  Write Protect Error On Initialization
  Data Errors

Setting the Line Voltage Select Switches

The voltage select switches on the rear panel must be set to the nominal line voltage for the area in which it is operating. Figure 2-1 shows the setting of the voltage select switches for the various line voltages.

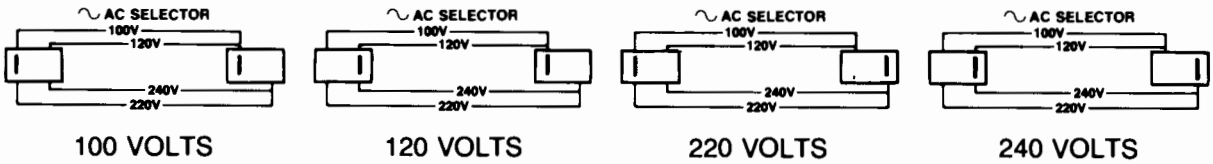

Figure 2-1. Line Voltage Select Switches

Fuses

A different fuse is required for each of the two voltage ranges of 110-120 and 220-240 VAC. Table 2-1 gives the correct fuse ratings and fuse part numbers.

Table 2-1. Fuses

Voltage Range	Fuse Rating	HP Part Number
96 & 125VAC	2.5A 250 VAC-Normal Blow	2110-0083
196 & 250VAC	1.5A 250 VAC-Normal Blow	2110-0043

WARNING
ALWAYS DISCONNECT THE DISC MEMORY FROM ANY AC LINE BEFORE CHANGING FUSES.

Power Cords

Power cords supplied by HP have polarities matched to the power-input socket on the equipment (Figure 2-2).

- L = Line or active conductor (also called "live" or "hot")
- N = Neutral or identified conductor
- E = Earth or safety ground

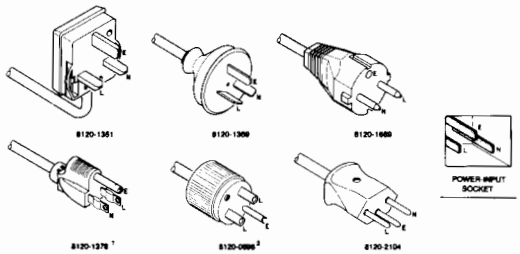

[1]UL and CSA approved for use in the United States of America and Canada with equipment set for either 100 or 120 Vac operation.

[2]UL and CSA approved for use in the United States of America and Canada with equipment set for either 200 or 240 Vac operation.

Figure 2-2. Available Power Cords

WARNING
IF IT IS NECESSARY TO REPLACE THE POWER CORD, THE REPLACEMENT CORD MUST HAVE THE SAME POLARITY AS THE ORIGINAL AS WELL AS THE EARTH OR SAFETY GROUND CONDUCTOR. OTHERWISE, A SAFETY HAZARD MIGHT EXIST IF AN INTERNAL FAILURE OCCURS.

The cord packaged with the equipment depends upon where the equipment is to be delivered.

Interfacing the HP 9133A to Your System

The HP 9133A is connected to the computer via the Hewlett Packard Interface Bus (HP-IB). The device address switches are set prior to connecting the interface cable.

Selecting the Device Address

Each device in an HP-IB system must be set to a unique device address. The HP 9133A contains two separate devices contained in the package. A device address switch is provided for each device. See Figure 2-3 for switch locations.

Prior to setting the device address switches, turn the disc memory AC line switches OFF.

The switches can be set to any one of eight device addresses, ranging from decimal 0 through 7. Refer to Figure 2-3 to set these switches to the desired device address.

Address	Switch Segments X	4	2	1	
0	***	UP	UP	UP	(Factory setting for Winchester)
1	***	UP	UP	DOWN	
2	***	UP	DOWN	UP	(Factory setting for flexible disc)
3	***	UP	DOWN	DOWN	
4	***	DOWN	UP	UP	
5	***	DOWN	UP	DOWN	
6	***	DOWN	DOWN	UP	
7	***	DOWN	DOWN	DOWN	

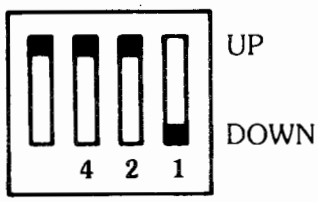

Figure 2-3 . Device Address Switch Setting

The HP-IB Interface

Refer to Figure 2-4 for a list of the HP-IB interface cables used with HP computers.

Length	Accessory Number
1 metre	10833A
2 metres	10833B
4 metres	10833C
.5 metre	10833D

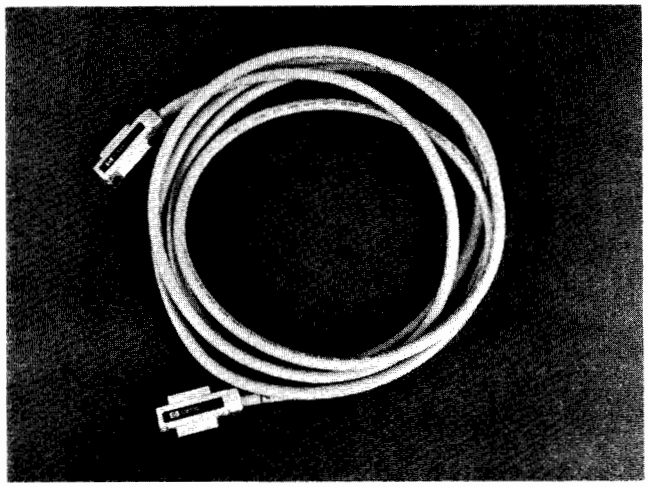

Figure 2-4. HP-IB Interface Cables

HP-IB Interface Restrictions:

1. All the AC line switches must be turned "OFF" when connecting (and disconnecting) devices to your system.
2. The total length of cable permitted in one bus system must be less than or equal to two metres times the number of devices connected together (the interface card is counted as one device).

3. The total length of the cable must not exceed 20 metres. For example, a system containing six devices can be connected together with cables that have a total length less than or equal to 12 metres (six devices x 2m/device = 12 metres). The individual lengths of cable can be distributed in any manner desired as long as the total length does not exceed the allowed maximum. If more than 10 devices are to be connected together, cables shorter than two metres must be used between some of the devices to keep the total cable length less than 20 metres.
4. The maximum number of devices that can be connected together in one bus system is 15.

   There are no restrictions to the way cables may be connected together; however, it is recommended that no more than four piggyback connectors be stacked together on one device. The resulting structure could exert enough force on the connector mounting to damage it.

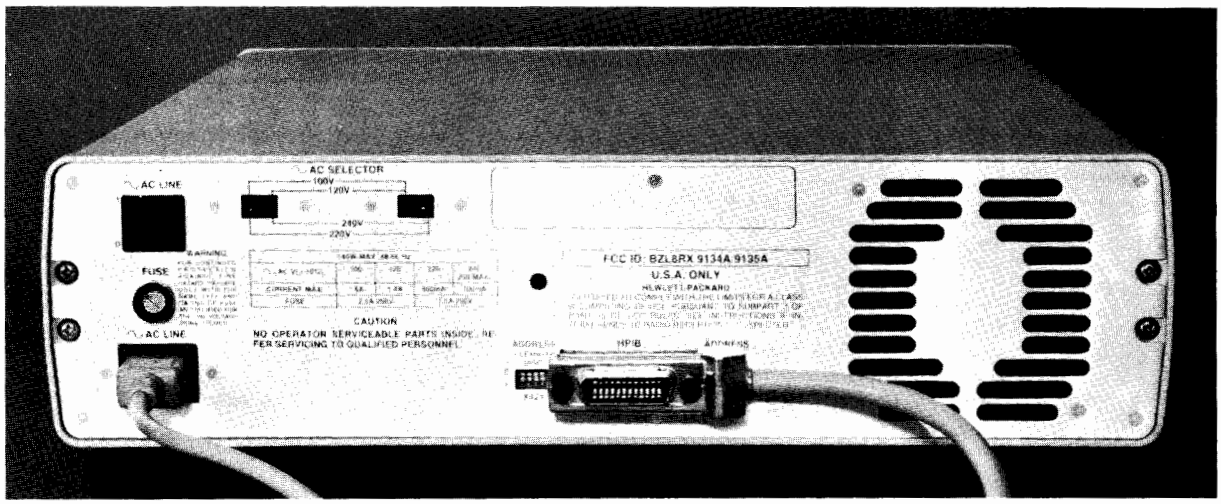

Figure 2-5. Interface Connection

Controls and Indicators

The indicators are located on the front panel. The indicators, as shown in Figure 2-6, are: a disc access light for the Winchester drive, and the head load indicator for the 3 1/2-inch flexible disc drive. The Winchester drive LED is illuminated whenever the disc is accessed for data storage or retrieval and momentarily when the drive is powered-up. The flexible disc drive LED lights up whenever the unit is powered up, the head is loaded, or when the drive is selected.

CAUTION

THE ACTIVITY LIGHT ON THE FRONT OF THE DRIVE INDICATES USEAGE OF THAT DRIVE. DO NOT DEPRESS THE DISC EJECT BUTTON WHEN THE ACTIVITY LIGHT IS ON.

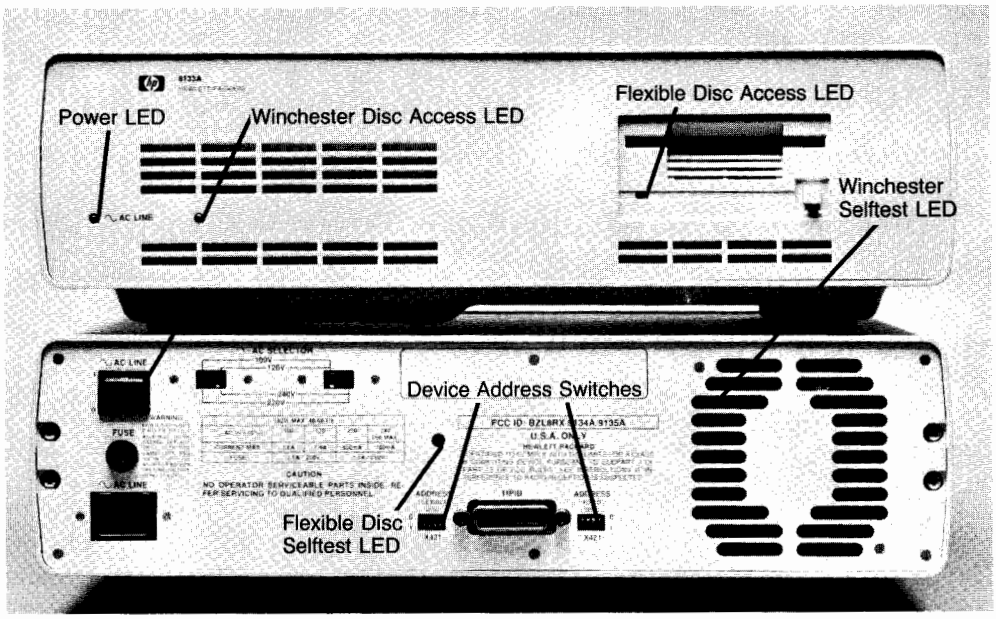

Figure 2-6. Front and Rear Panels

Applying Power

Before turning the disc memory on, be sure to perform all the procedures in Chapter 2.

Locate the AC line switch on the rear panel and set it to the "ON" or "1" position. The disc drive requires about 20 seconds after the application of power before it is ready for operation or before you insert your disc. See the section titled "Selftest and Adjustments" for the power-on selftest indication.

Loading and Unloading the Flexible Disc

To install and remove flexible discs:

1. Do not attempt to insert the disc into the drive without power applied.

Manual Shutter

2. Slide the disc guard away from the head window exposing the disc surface. Insert the exposed head window first with the metal centering hub down. Carefully slide the disc into the drive until you feel it contact the rear of the drive. Do not force the disc.

Auto Shutter

Slide the disc into the drive until you feel it contact the rear of the drive. Do not force the disc.

Remember, either type of disc (manual or auto shutter) will work in either type of drive. If you do not have the auto shutter mechanism in the drive and the disc, you must follow the procedure described with using the manual shutter.

3. Remove the disc by depressing the disc eject button and pulling the disc straight out. Always slide the disc guard over the head window immediately after removing the disc from the drive.

Refer to Figure 2-7 for proper loading of the flexible disc.

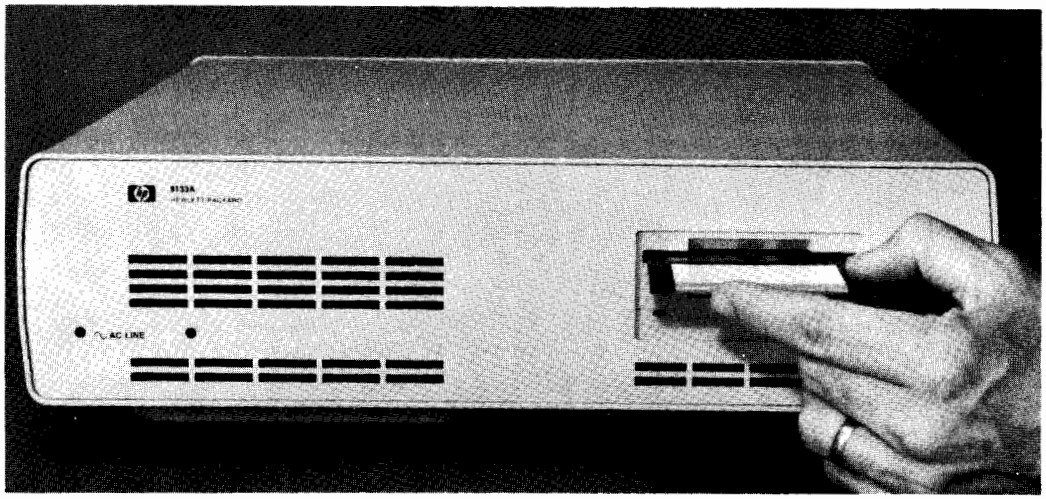

Figure 2-7. Disc Loading

Basic System Operation

Before using a blank flexible disc, it must be formatted or initialized for use with your computer. This process checks the disc for defects (areas where information cannot be stored), reserves spare tracks, and creates a file directory. The directory holds the name and location of each file on the disc. When a disc is first initialized, the directory is empty, so no files are listed when you catalog the disc.

The flexible disc drive in the 9133 emulates the 82901 drive. Thus, you program it using mass storage ROM or driver statements that your computer manuals describe for the 82901 disc drive.

Write Protect Error on Initialization

A motor speed check is performed when a disc is inserted to be initialized. If the motor speed is on either side of the tolerance allowed, a Write Protect Error is generated and the disc is not initialized. If your drive is operating properly, this indication is one of a defective disc. Discard the disc.

The motor speed should be checked and/or adjusted before discarding the disc. See the section titled "Selftest and Adjustments".

Data Errors

Two error conditions cause the selftest LED to come on and stay on until the condition disappears. These conditions are a command sequence-error over the HP-IB (from the host controller) and a data error from the disc. Whenever these conditions occur it is best to retry the last

operation. If a retry is successful, the error and error indication are cleared. If the condition remains after several retries, perform the service selftest and or the remote selftest to determine the cause of the error condition.

Chapter 3
Interface Information

Introduction

This chapter presents an overview of the HP-Interface Bus. The command set for controlling the flexible disc is presented in the Appendix.

Overview of the HP-Interface Bus

The following is the definition of the terms and concepts used to describe HP-IB system operations.

HP-IB System Terms:

1. Byte - A unit of information consisting of eight binary digits (bits).
2. Device - Any unit that is compatible with the IEEE Standard 488-1978.
3. Device Dependent - A response to information sent on the HP- IB that is charactistic of an individual device's design and may vary from device to device.
4. Operator - The person who operates either the system or any device in the system.
5. Addressing - The characters sent by a controlling device to specify which device will send information on the bus and which device(s) will receive that information.
6. Polling - The process typically used by a controller to locate a device that needs to interact with the controller. there are two types of polling:

   Serial Poll - This method obtains one byte of operational information about an individual device in the system. The process must be repeated for each device from which information is desired.

   Parallel Poll - This method obtains information about a group of devices simultaneously.

Interface Bus Concepts:

Devices which communicate along the interface bus can be classified into three basic categories:

1. Talkers - Devices which send information on the bus when they have been addressed.
2. Listeners - Devices which receive information sent on the bus when they have been addressed.
3. Controllers - Devices that can specify the talkers and listeners for an information transfer. Controllers can be categorized as one of two types:

Active Controller - The current controlling device on the bus.

System Controller - The controller that can take priority control of the bus even if it is not the current active controller. Although each bus system can have only one system controller, the system can have any number of devices capable of being the active controller.

Message Concepts:

Devices which communicate along the interface bus are transferring quantities of information. The transfer of information can be from one device to another device, or from one device to more than one device. These quantities of information can be thought of as "messages". Typically, each message consists of two basic parts; the address portion specified by the controller and the information that comprises the message.

In turn, the messages can be classified into 12 types. The 12 types messages are defined as follows:

1. The Data Message:
   This is the actual information which is sent from one talker to one or more listeners along the interface bus. Data can be in either numeric form or a string of characters.
2. The Trigger Message:
   This message causes the listening device(s) to perform a device-dependent action.
3. The clear Message:
   This message causes either the listening device(s) or all of the devices on the bus to return to their predefined device-dependent states.
4. The Remote Message
   This message causes the listening device(s) to switch from local front-panel control to remote program control.
5. The Local Message:
   This message clears the Remote Message from the listening device(s) and returns the device(s) to local front-panel control.
6. The Local Lockout Message:
   This message prevents the operator from manually inhibiting remote program control.
7. The Clear Lockout and Set Local Message:
   This message causes all devices on the bus to be removed from local lockout and revert to local. This message also clears the Remote Message for all devices on the bus.
8. The Request Service Message:
   A device can send this message to signify that the device needs some type of interaction with the controller. This message is cleared by the device's Status Byte Message if the device no longer requires service.
9. The Status Byte Message:
   A byte that represents the status of a single device on the bus. One bit indicates whether the device sent a Request Service Message and the remaining bits indicate operational conditions defined by the device. This byte is sent from a talking device in response to a serial poll operation performed by a controller.
10. The Status Bit Message:
    A byte that represents the operational conditions of a group of devices on the bus. Each

device responds on a particular bit of the byte thus identifying a device-dependent condition. This bit is typically sent by devices in response to a parallel poll operation.

11. The Pass Control:
    This transfers the bus management responsibilities from the active controller to another controller.
12. The Abort Message:
    The system controller sends this message to unconditionally assume control of the bus from the active controller. This message terminates all bus communications but does not implement a Clear Message.

These messages represent the full implementation of all HP-IB system capabilities. Each device in a system, however, may be designed to use only the messages that are applicable to its purpose in the system. It is important for you to be aware of the HP-IB functions implemented on each device connected to your HP-IB system to ensure the operational capability of the system.

Chapter 4
Troubleshooting

Introduction

This chapter provides the physical location of key components, power supply circuit diagrams, power supply troubleshooting, and a list of replaceable parts.

The following topics are discussed in this chapter:

- Repair Philosophy
  - Exchange Assemblies
- Support Packages Contents Lists
  - Product Support Package (PSP)
  - Field Support Inventory Package (FSI)
- Recommended Field Support Inventory
- Controller Assembly
- Power Supply

Repair Philosophy

The 3 1/2-inch Disc Drive assemblies are serviced on the exchange program. The assembly includes the drive and drive electronics board (the PC board attached to the lower side of the drive).

The selftest and alignment procedures are given to enable you to isolate problems and correct misalignment in the field.

Power supply information is presented in each tabbed section. Controller assembly detailed information is not presented.

Exchange Assemblies

The following assemblies are exchange assemblies for the 3 1/2-inch drive portion of the 9133 Disc Memory:

3 1/2-inch Flexible Disc Drive -- 09121-69511
Controller Assembly -- 09133-66500

Support Packages Contents Lists

The following packages lists are the contents for the PSP and the FSI.

Product Support Package (PSP) -- 09121-67100

09121-88810 -- Pad Weight
8710-1518 -- Radial Alignment Tool
09121-89400 -- Disc, Alignment
09121-89401 -- Disc, Level
09121-89405 -- Disc, Cleaning
8750-0051 -- Gauge, Tension
5061-2808 -- HP-85 Test Package
09121-90030 -- Manual, Service

Field Inventory Parts Package (FSI) -- 09121-67197

09121-69510 -- Controller/Power Supply Assembly (9121)
09133-66500 -- Controller Assembly (9133)
09121-69511 -- 3 1/2-inch Flexible Disc Drive
09121-68501 -- Fan Assembly (9121D/S)
09121-88811 -- Pad, Head Load (9121D/S)
2110-0587 -- Fuse, 2A

Recommended Field Service Inventory

The following list of parts and assemblies is recommended for building your Field Service Inventory (FSI).

09121-69511 -- 3 1/2-inch Flexible Disc Drive
09121-69510 -- Controller/Power Supply Assembly (9121)
09133-66500 -- Controller Assembly (9133)
09121-68501 -- Fan Assembly (9121D/S)

Controller Assembly

The controller electronics and -10V power supply sections of the printed circuit assembly are presented in Figure 4-1. Along with the key components the selftest control points are also labeled.

Power Supply

The 3 1/2-inch drive requires the following three voltages: + 12, + 5, and -10V. The + 12 and + 5 are obtained from the Winchester supply. See the Winchester Service Manual (09134-90032) for information on these supplies. The -10V is generated on the Controller assembly. The schematic and component locator for the -10V power supply in Figures 4-2 and 4-3.

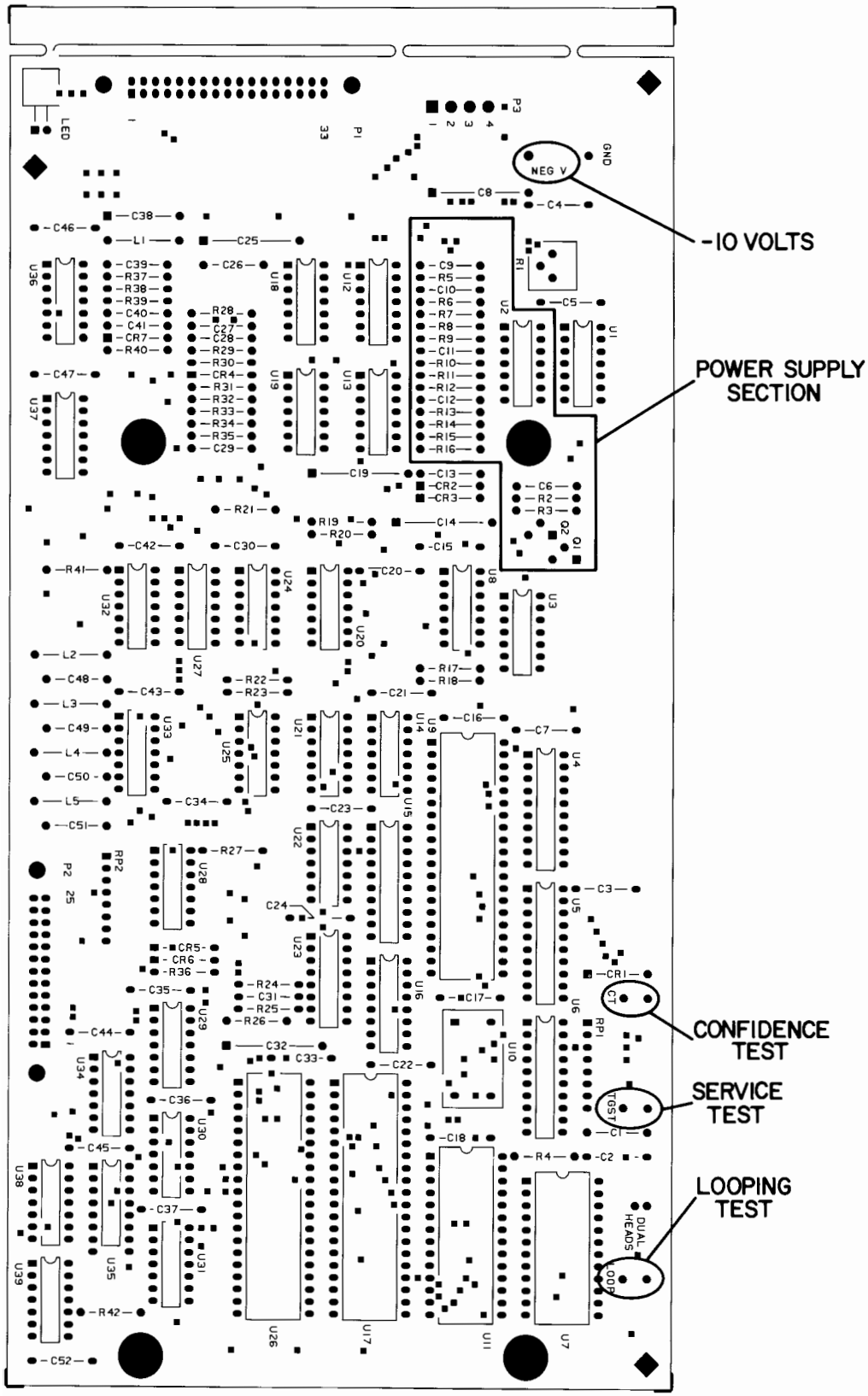

Figure 4-1. Controller and Power Supply Assembly

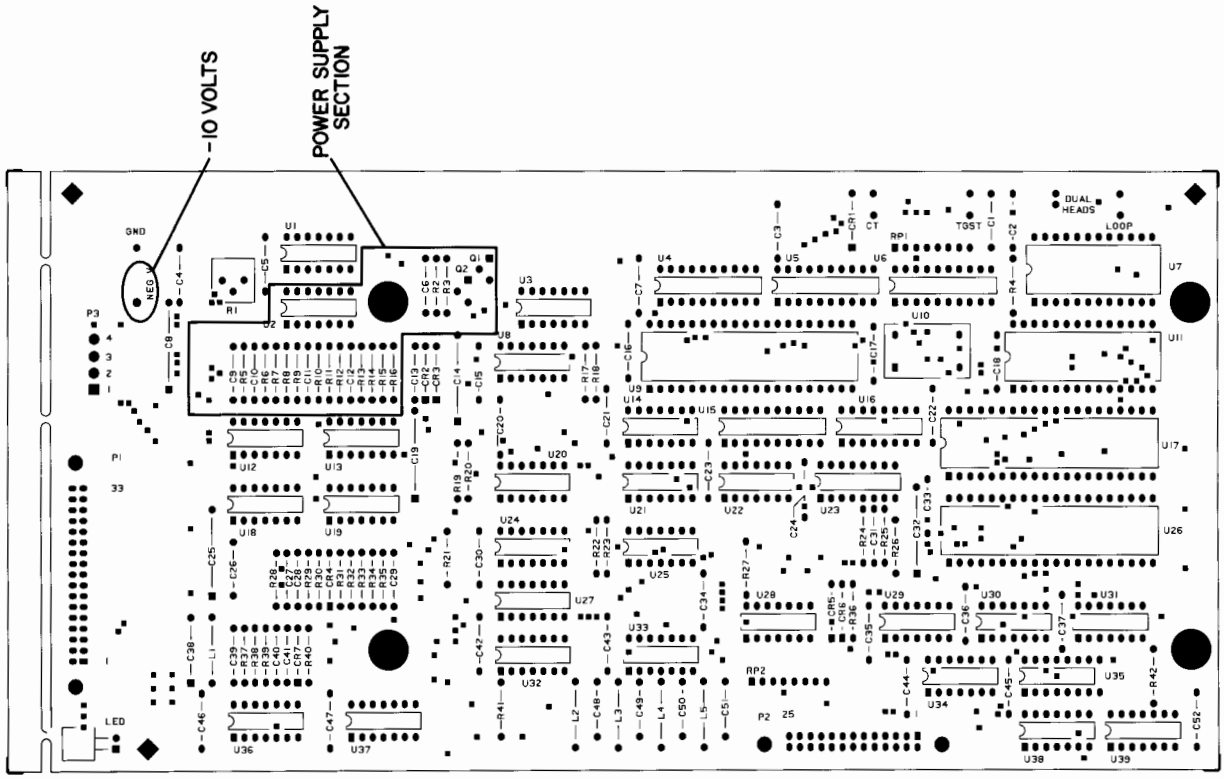

Figure 4-2. Power Supply Component Locator

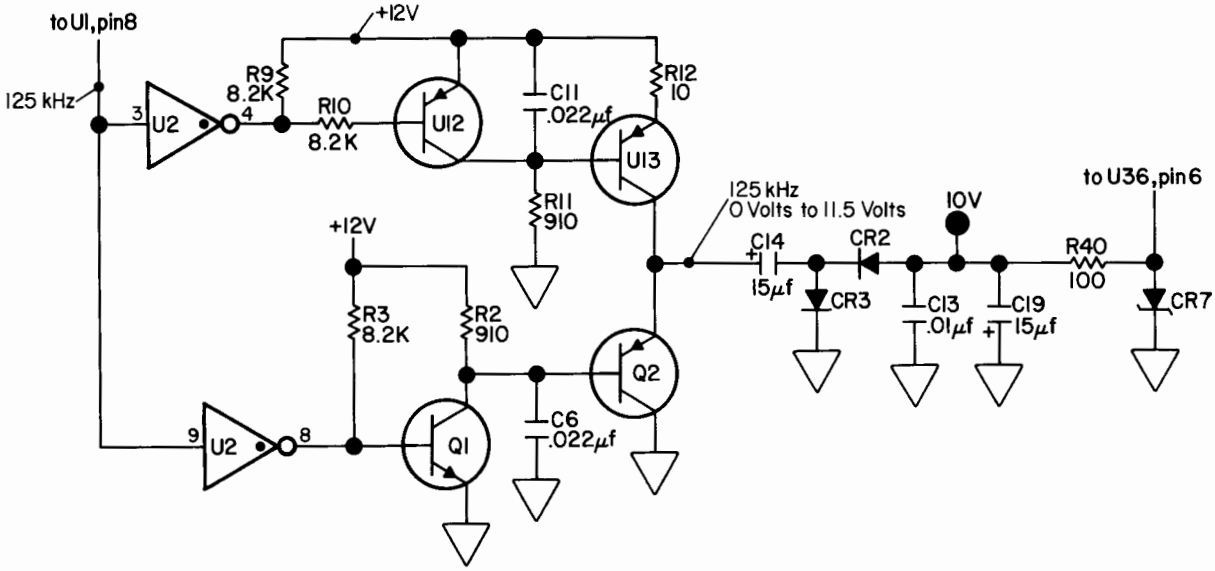

Figure 4-3. Power Supply Schematic Diagram

Chapter 5
Assembly Access

Introduction

This chapter provides information for disassembly of the 9133 disc memories. An exploded view is also provided with the instructions. The exploded view references part numbers that are listed in the replaceable parts section.

The following topics are discussed in this chapter:

Safety Considerations
Top Cover Removal
Controller Assembly Removal
Sheet Metal Housing Removal
Drive Removal
9133 Parts Lists

The following tools are required for disassembly and reassembly of the disc memories.

#2 Posidrive Screwdriver
#1 Posidrive Screwdriver
9/32 Nut Driver
Needlenose Pliers

Safety Considerations

General

This product and related documentation must be reviewed for familiarization with safety markings and instructions before operation.

Safety Symbols

Instruction manual symbol: the product will be marked with this symbol when it is necessary for the user to refer to the instruction manual in order to protect the product against damage.

Indicates hazardous voltages.

Indicates earth (ground) terminal (sometimes used in manual to indicate circuit common connected to grounded chassis.

WARNING

The WARNING sign denotes a hazard. It calls attention to a procedure, practice, or the like, which, if not correctly performed or adhered to, could result in injury. Do not proceed beyond a WARNING sign until the indicated conditions are fully understood and met.

CAUTION

The CAUTION sign denotes a hazard. It calls attention to an operating procedure, practice, or the like, which if not correctly performed, could result in damage to or destruction of part or all of the product. Do not proceed beyond a CAUTION sign until the indicated conditions are fully understood and met.

Safety Earth Ground

This is a safety class I product and is provided with a protective earthing terminal. An uninterruptible safety earth ground must be provided from the main power source to the product input wiring terminals, power cord, or supplied power cord set. Whenever it is likely that the protection has been impaired, the product must be made inoperative and be secured against any unintended operation.

Before Applying Power

Verify that the product is configured to match the available main power source per the input power configuration instructions provided in this manual. Also, check to ensure that the correct fuse is installed.

If this product is to be energized via an auto-transformer (for voltage reduction), make sure the common terminal is connected to the earth terminal of the main power source.

Servicing

Any servicing, adjustment, maintenance or repair of this product must be performed only by service-trained personnel.

Adjustments described in this manual may be performed with power supplied to the product while protective covers are removed. Energy available at many points may, if contacted, result in personal injury.

Capacitors inside this product may still be charged even when disconnected from its power source.

To avoid a fire hazard, only fuses with the required current rating and of the specified type (normal blow) are to be used for replacement.

Top Cover Removal

To access the internal assemblies, the top cover must first be removed. Performing the following steps allows you to remove the top cover.

- Power cord disconnected
- Remove the four cover mounting screws shown in Figure 5-1

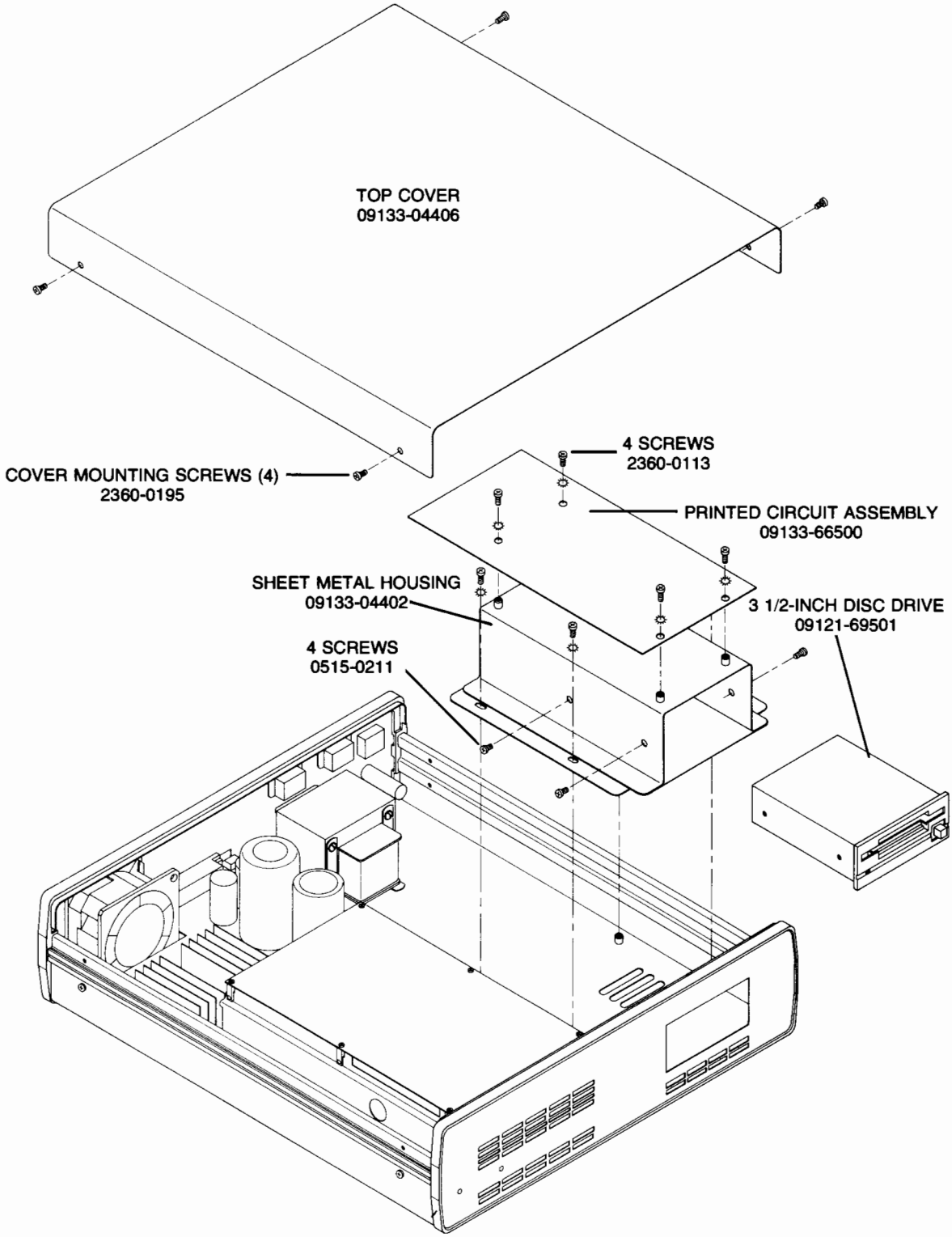

Figure 5-1. HP 9133 Disc Memory Exploded View

- Lift the top cover from the unit and lay it inverted to the side
- Remove the hex nut securing the ground strap

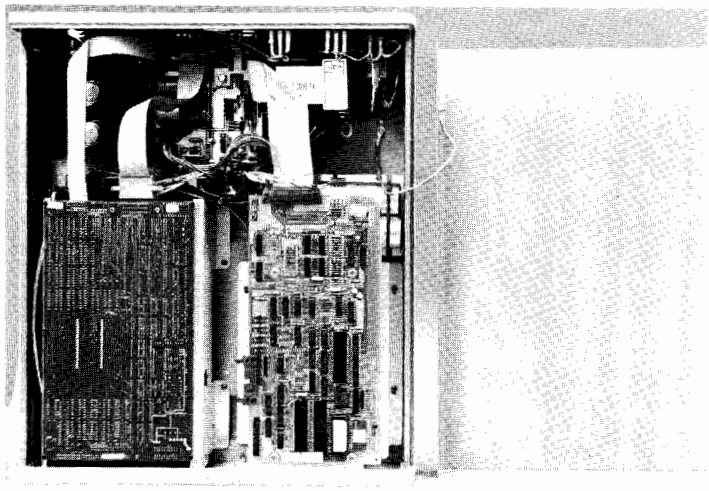

Figure 5-2. Top Cover Removal

Controller Assembly Removal

The Controller assembly is removed by disconnecting three cables and removing four screws. See Figure 5-3.

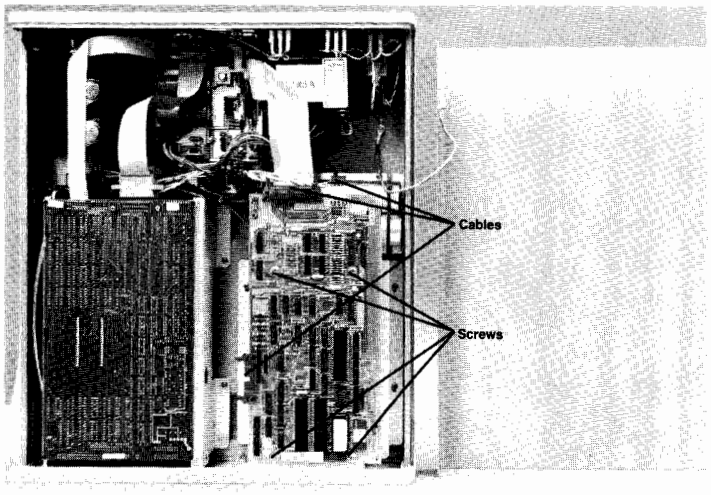

Figure 5-3. Controller Assembly Removal

Sheet Metal Housing Removal

The 3 1/2-inch drive is contained inside a sheet metal housing. When removing the drive, the housing must be removed. To do this remove the four screws shown in Figure 5-4. Lift the entire housing from the chassis.

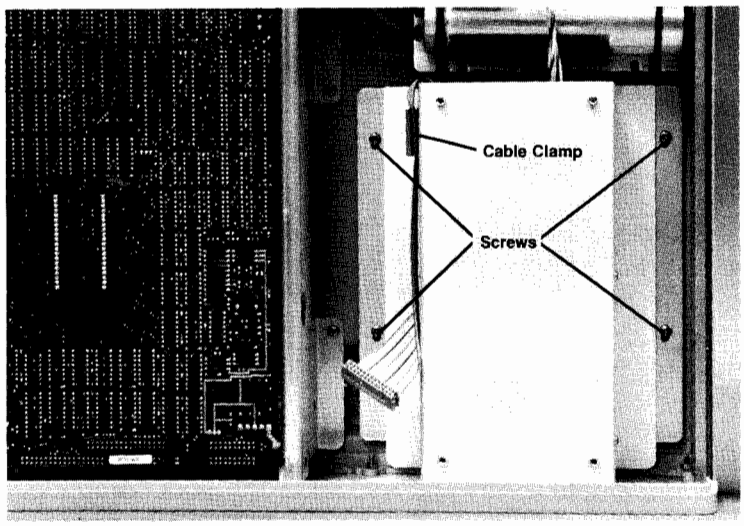

Computer Museum

Figure 5-4. Sheet Metal Housing Removal

Drive Removal

The disc drive is secured to the sheet metal housing using four screws, two of which are shown in Figure 5-5. Remove these four screws and slide the drive out the rear of the sheet metal enclosure. Remove the cable from its secured position. See Figures 5-5 and 5-6.

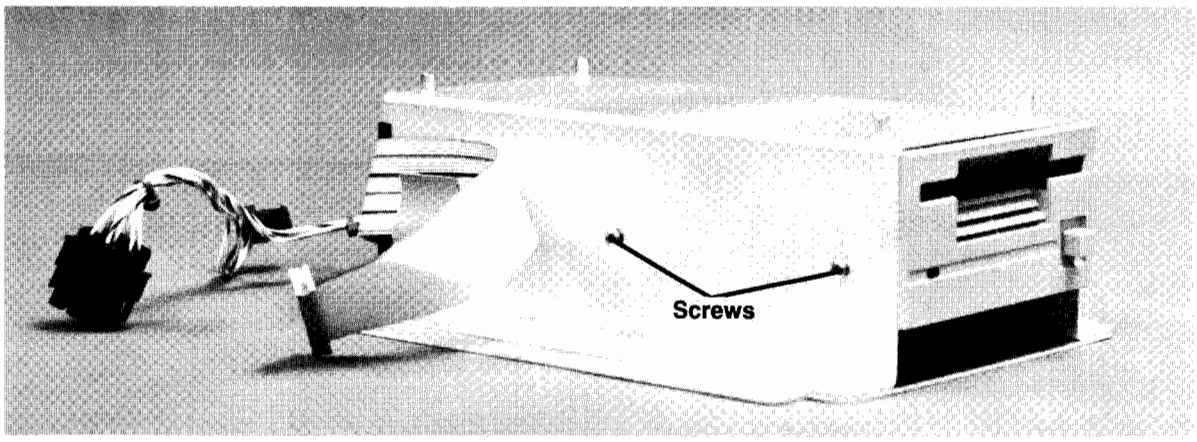

Figure 5-5. Drive Removal

The two cables must then be removed from the drive. Reassembly is the reverse of this procedure.

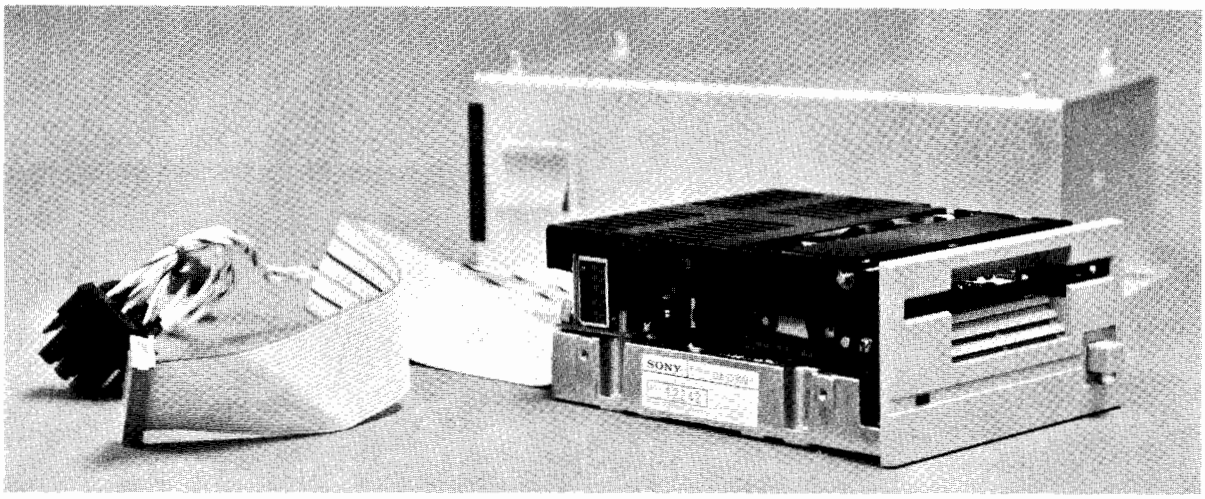

Figure 5-6. The 3 1/2-inch Disc Drive

HP 9133 Parts Lists

This section contains the replaceable parts lists for the 9133. The CD column is required when ordering a part from HP. Please include this check digit number with your order.

Level	Reference Designator	HP Part No.	CD	Description
1	A1	09133-69500	5	CTRL ASSEMBLY
.2	C1,2,3,5,7,13, 15-18,20-24, 30,33-37,42-47,52	0160-4832	4	C-F .01UF 10 %
.2	C4,9,39,41,26	0160-4835	7	C-F .1UF 10 % 50V
.2	C6,11	0160-4833	5	C-F .022UF 10 %
.2	C8,14,19,25,32	0180-1746	5	C-F 15UF 20V
.2	C10,12,31,48-51	0160-5349	0	C-F 200PF 5 %
.2	C27	0160-4805	1	C-F 47PF 5 % 100V
.2	C28	0160-4830	2	C-F 2200PF 10 %
.2	C29	0160-4574	1	C-F 1000PF 10 %
.2	C38	0180-0291	3	C-F 1UF 35V 10 %
.2	CR1,2,3,5,6	1901-0050	3	DIO SWITCHING
.2	CR4	1901-0518	8	DIO-SM-SIG-S
.2	CR7	1902-0029	8	DIO-ZNR 12V 5 %
.2	LED	1990-0618	6	LED-LMP RED
.2	L1	9100-0539	3	IDCTR (MSIC)
.2	L2,3,4,5	9140-0183	7	IDCTR 20UH 10 %
.2	P1	1251-5068	4	CONN 2X17 M
.2	P2	1251-8081	7	CONN-26 PIN M
.2	P3	1251-6377	0	4 PIN HEADER
.2	Q1,2	1854-0477	7	XSTR NPN 2N2222A
.2	R1	2100-0554	5	R-V 500 OHM 10 %
.2	R2,11	0683-9115	4	R-F 910 OHM .05
.2	R3,10	0683-8225	5	R-F 8.2K 5 % .25W
.2	R4,24,27,30	0683-1025	9	R-F 1K 5 % .25W
.2	R5	0698-3442	9	R-F 237 OHM 1 %

.2	R6,7	0757-0417	8	R-F 562 OHM 1 %
.2	R8	0757-0442	9	R-F 10K .01 1/8W
.2	R9	0683-8225	5	R-F 8.2K 5 % .25W
.2	R12	0683-1005	5	R-F 10 OHM .25
.2	R13,14,31,33	0698-3445	2	R-F 348 OHM 1 %
.2	R15,29	0757-0442	9	R-F 10K .01 1/8W
.2	R16,28	0698-3154	0	R-F 4.22K 1 %
.2	R17-20,22,2, 37,41,42	0683-1025	9	R-F 1K 5 % .25W
.2	R21,40	0683-1015	7	R-F 100 OHM .05
.2	R25	0757-0430	5	RES 2.21K 1 %
.2	RP1,2	1810-0204	6	NTWK-R 7X1K SIP
.2	R26	0698-3154	0	R-F 4.22K 1 %
.2	R32,34	0757-0280	3	RES 1K 1 % .125W
.2	R35	0698-3442	9	R-F 237 OHM 1 %
.2	R36	0698-3152	8	R-F 3.48K 1 %
.2	R38	0757-0417	8	R-F 562 OHM 1 %
.2	R39	0698-3132	4	R-F 261 OHM .01
.2	U1,30,32	1820-2096	9	IC SN74LS393N
.2	U2,22,37,38	1820-0471	0	IC-SN7406N
.2	U3,34	1820-1199	1	IC-74LS04
.2	U4	1820-2485	0	IC SN75160N
.2	U5	1820-2483	8	IC SN75161N
.2	U6	1820-2024	3	IC-SN74LS244
.2	U7	1818-1178	1	IC MK 4118AN-3
.2	U8,39	1820-1112	8	IC-74LS74
.2	U9	1820-2549	7	IC-8291AP
.2	U10	1813-0194	9	XTAL-CLK-OSC
.2	U11 ROM	09121-15510	8	SONY CTRL E PROM
.2	U12,13	1858-0058	8	XSTR ARY 16P-DIP
.2	U14,24	1820-1201	6	IC-SN74LS08N
.2	U15	1820-1730	6	IC SN74LS273N
.2	U16	1820-1216	3	IC-SN74LS138
.2	U17	1820-2624	9	IC-68B09
.2	U18,19	1821-0001	4	XSTR-ARRAYCA3046
.2	U20,21,28,31	1820-1197	9	IC-74LS00
.2	U23	1820-1437	0	IC-SN74LS221
.2	U25	1820-1202	7	IC-74LS10N
.2	U26	1820-3006	3	IC-MB8876A CTLR
.2	U27	1820-1433	6	IC SN74LS164N
.2	U29,33	1820-1416	5	TTL TRGR 74LS14N
.2	U35	1820-1300	6	IC SN74LS195N
.2	U36	1826-0210	7	IC-LM361
.2		0360-0124	3	STUD-TERM
.2		1200-0861	8	SKT-IC 28-CONT
.2		7120-6830	9	LABEL INFO

Computer Museum

Section IV
HP 9133V and 9133XV
Disc Memories

This section contains information on the 3 1/2-inch Flexible Disc Drive installation in the HP 9133V/XV Disc Memories.

This section contains the following chapters.

Chapter 1 General Description
Chapter 2 Installation
Chapter 3 Basic Operating Procedures
Chapter 4 Troubleshooting
Chapter 5 Assembly Access

Detailed information on the Winchester drive is not contained in this manual. For that information, see the Winchester Disc Drive Service Manual, P/N 09134-90032.

Chapter 1
General Description

Introduction

This chapter contains general information about the HP 9133V/XV Disc Memories. Included in this section are the following:

- **Product Description**
- **Technical Specifications**

Product Description

The HP 9133V and the 9133XV Disc Memories (Figure 1-1) are random access data storage devices; they each contain a 5 1/4-inch Winchester disc and a 3 1/2 inch flexible disc drive.

The 3 1/2-inch flexible disc drive in the 9133V and 9133XV emulates an HP 9121S flexible disc drive and can be operated by any computer which supports the 9121S or 82902M flexible disc drives.

The 9133V is available with the Winchester disc configured as a single volume with a formatted capacity of 4.8 MBytes, or as four volumes with a formatted capacity of 1.15 MBytes per volume as option 004. The four volume configuration emulates an HP 9895A 8-inch flexible disc drive master with three slave drives, and can be operated by any computer which supports the 9895A.

The 9133XV is available only with the Winchester disc configured as a single volume with a formatted capacity of 14.5 MBytes.

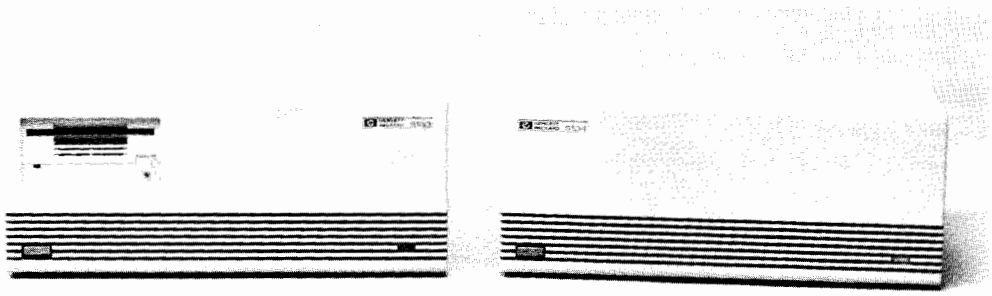

Figure 1-1. HP 9133V/XV and HP 9134XV Disc Memories

Technical Specifications

Listed below are the physical, electrical, and environmental specifications for the HP 9133V/XV disc memories.

Unit Specifications

	9133V/XV
Power Requirements:	
Source (selected by rear panel switch)	90 to 125Vac 180 to 250Vac
Line Frequency	48 to 66 Hz
Power Consumption(max)	125W
Environmental Range:	
Operating Temperature	10° to 40° C (50° to 104° F)
Storage Temperature	-40° to 60° C (-40° to 140° F)
Operating Humidity (non-condensing, 25° C max wet bulb temperature)	20% to 80%
Storage Humidity (non-condensing)	5% to 95%
Operating Altitude	0 to 4572m (0 to 15000 ft)
Storage Altitude	-304 to 1524m (-1000 to 50000 ft)
Size/Weight:	
Height	125mm(4.9 in)
Width	325mm(12.8 in)
Depth	285mm(11.2 in)
Net Weight	10kg(22 lb)
Shipping Weight	16.8kg(37 lb)

Drive Specifications

Technical	3 1/2" Flexible Disc 9133V/XV
Formatted Capacity:	
Bytes per Unit	270K
Bytes per Sector	256
Sectors per Track	16
Tracks per Surface	66
Surfaces per disc	1
Tracks per inch	135
Recording Format	dbl density
Max Sustained Transfer Rate*	17.8kByte/sec
Average Access Time	420 msec(on) 1420msec(off)
Rotational Speed	600rpm
Media Part Number (10 pack)	HP 92191A

*Mainframe dependent

Maximum Data Transfer Rates:
(3 1/2-inch flexible disc only)

Interleave	Avg. Transfer Rate* (KBytes/second)
1	2.6
2	17.1
3	12.1
4	9.3
5	7.6
6	6.4
7	5.5
8	4.8
9	4.3
10	3.9
11	3.5
12	3.2
13	3.0
14	2.8
15	2.6

*Average Data rate for a multiple-track read or write. Rate is mainframe dependent.

Interleave for the Winchester is preset at the factory and cannot be changed.

Chapter 2
Installation

Introduction

This section provides the installation and initial power-on procedures for the HP 9133V/XV. The following topics are covered in this section:

- Equipment Supplied
- Setting the Line VOLTAGE SELECT Switch
- Fuses
- Power Cords
- Interfacing to Your System
  - Selecting the Device Address
  - The HP-IB Interface

Equipment Supplied

Description	Quantity		HP Part Number
Power Cable	1		Dependent on location
User's Manual	1		09133-90010
Spare Fuse	1	90 to 125VAC	3 Amp 2110-0003
		or	
		180 to 250VAC	2 Amp 2110-0002
Flexible Disc Media	1		

Setting the Line VOLTAGE SELECT Switch

The VOLTAGE SELECT switch on the rear panel was set to the line voltage for the original destination when shipped from the factory. Verify that the setting is correct for local line voltage before connecting to the power source.

Figure 2-1 shows the setting of the VOLTAGE SELECT switch for the two ranges of line voltage.

WARNING

ALWAYS TURN OFF THE AC POWER SWITCH BEFORE CHANGING THE VOLTAGE SELECT SWITCH.

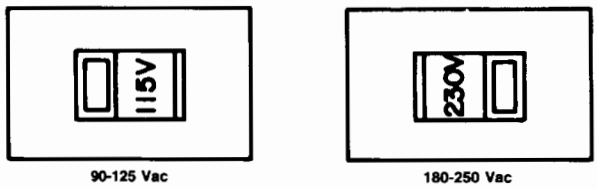

Figure 2-1. Line VOLTAGE SELECT Switch

Fuses

A different fuse is required for each of the two voltage ranges of 90-125 and 180-250V. The correct fuse for the original destination is installed and a spare fuse is included before shipment from the factory.

Table 2-1 gives the correct fuse ratings and fuse part numbers for each voltage range.

Table 2-1. Fuses

Switch Setting	Voltage Range	Fuse Rating	HP Part Number
115V	90-125VAC	3A 250 VAC-Normal Blow	2110-0003
230V	180-250VAC	2A 250 VAC-Normal Blow	2110-0002

WARNING

ALWAYS DISCONNECT THE DISC MEMORY FROM THE AC SOURCE BEFORE CHANGING FUSES.

Power Cords

Power cords supplied by HP have polarities matched to the power input socket on the equipment (Figure 2-2).

L = Line or active conductor (also called "live" or "hot")
N = Neutral or identified conductor
E = Earth or safety ground

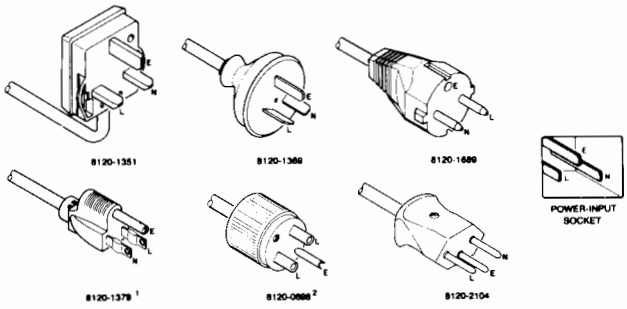

[1]UL and CSA approved for use in the United States of America and Canada with equipment set for either 100 or 120 Vac operation.

[2]UL and CSA approved for use in the United States of America and Canada with equipment set for either 200 or 240 Vac operation.

Figure 2-2. Available Power Cords

WARNING

IF IT IS NECESSARY TO REPLACE THE POWER CORD, THE REPLACEMENT CORD MUST HAVE THE SAME POLARITY AS THE ORIGINAL. OTHERWISE, A SAFETY HAZARD MIGHT EXIST IF AN INTERNAL FAILURE OCCURS.

The correct power cord for the original destination is packaged with the equipment.

Interfacing to Your System

The disc memory is connected to the computer via the Hewlett Packard Interface Bus (HP-IB). The device address switches are set prior to connecting the interface cable.

Selecting the Device Address

Each device in an HP-IB system must be set to a unique device address. The two drives in an HP 9133V/XV are, for this purpose, considered separate devices; hence a device address switch is provided for each drive. See Figure 2-3 for switch locations.

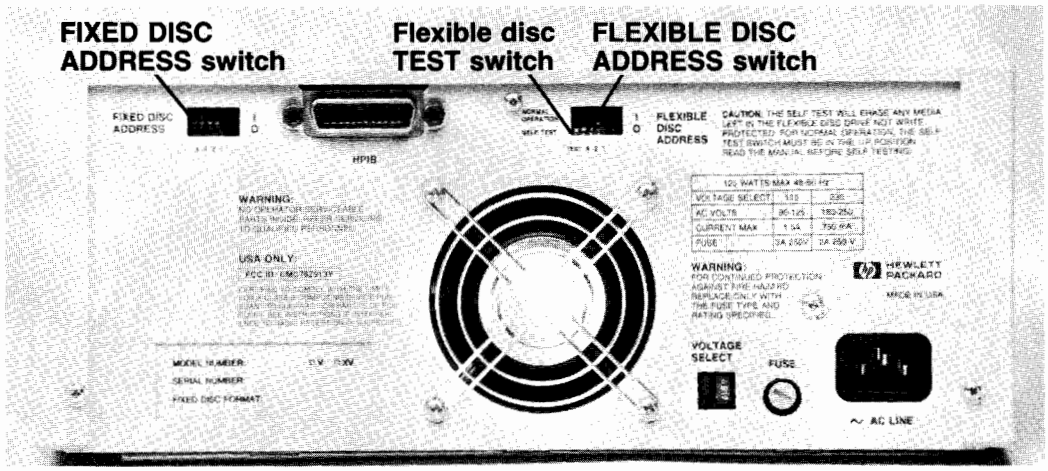

Figure 2-3. Device Address Switches

A device address switch can be set to any one of eight device addresses ranging from decimal 0 through 7 by proper positioning of the four switch segments within the device address switch. Table 2-2 lists the switch-segment positions for the eight device addresses.

Prior to setting the device address switches, turn the disc memory AC line switch OFF.

Table 2-2. Switch-Segment Positions

Address	*Test	4	2	1	
0	**	DOWN	DOWN	DOWN	(Factory setting for Winchester)
1	**	DOWN	DOWN	UP	
2	**	DOWN	UP	DOWN	(Factory setting for flexible disc)
3	**	DOWN	UP	UP	
4	**	UP	DOWN	DOWN	
5	**	UP	DOWN	UP	
6	**	UP	UP	DOWN	
7	**	UP	UP	UP	

* Refer to Chapter 3 for test information.

** The TEST switch segment on the flexible disc device address switch must be UP for normal operation. The position of this switch segment on the fixed disc device address switch does not affect operation.

NOTE

If the TEST switch segment on the flexible disc device address switch is in the down position, the computer will not be able to communicate with the disc drive and will probably indicate that the disc drive is not present.

The HP-IB Interface

Refer to Figure 2-4 for a list of the HP-IB interface cables used with HP computers.

CAUTION

ALWAYS SET THE AC LINE SWITCHES TO "OFF" (0) FOR THE COMPUTER AND THE DISC DRIVES WHEN INSERTING OR REMOVING THE INTERFACE CABLES. USE ONLY CABLES DESIGNED BY HEWLETT-PACKARD FOR YOUR EQUIPMENT. FAILURE TO DO SO COULD DAMAGE THE DISC DRIVE OR THE CONTROLLING COMPUTER.

Length	Accessory Number
1 metre	10833A
2 metres	10833B
4 metres	10833C
.5 metre	10833D

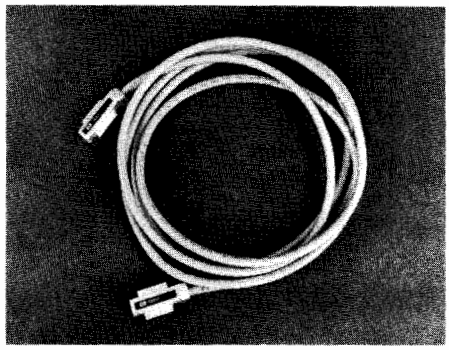

Figure 2-4. HP-IB Interface Cables

HP-IB Interface Restrictions

1. All the AC line switches must be turned "OFF" when connecting (and disconnecting) devices to your system.
2. The total length of cable permitted in one bus system must be less than or equal to two metres times the number of devices connected together (the interface card counts as one device; the 9133 counts as two devices).
3. The total length of the cable must not exceed 20 metres. For example, a system containing six devices can be connected together with cables that have a total length less than or equal to 12 metres (six devices x 2m/device = 12 metres). The individual lengths of cable can be distributed in any manner desired as long as the total length does not exceed the allowed maximum.
4. The maximum number of devices that can be connected together in one bus system is 15.

   There are no restrictions on the way cables may be connected together; however, it is recommended that no more than four piggyback connectors be stacked together on one device. The resulting structure could exert enough force on the connector mounting to damage it.

Chapter 3
Basic Operating Procedures

Introduction

This section provides initial power-on and check out procedures for for the HP 9133V/XV and discusses flexible disc handling and write protection. The following topics are covered:

Drive Operation
- Controls and Indicators
- Initial Power-on and Operating Procedure
- Initial Checkout

Flexible Disc Procedures
- Flexible Disc Description
- Write Protection and Initialization
- Inserting and Removing the Flexible Disc
- Media Monitor
- Media Wear Indication

Drive Operation

Controls and Indicators

The location of all controls and indicators on the disc memory is shown in Figure 3-1. Front panel controls and indicators are a primary power LINE switch, a FAULT indicator, an ON LINE indicator for the Winchester disc drive, and a disc access indicator for the 3 1/2-inch flexible disc drive. Rear panel controls and indicators are a device address switch for each drive and the VOLTAGE SELECT switch. These were discussed in Chapter 2. Also, within the cutout for each device address switch is a selftest indicator. Adjacent to the FLEXIBLE DISC ADDRESS switch segments is a TEST switch permitting a user to initiate selftests.

The LINE switch controls the application of AC power to the disc memory. It is depressed to apply power, and depressed again to remove power.

The FAULT indicator is on whenever the selftest indicator of either disc drive is on. It is normally on during the power-up selftest, selftest initiated by a command from the computer, or when a fault exists in either disc drive. It also indicates the results of the user-confidence selftest initiated by the TEST switch on the rear panel of the disc memory. If the FAULT indicator remains on or flashing for more than one minute after power-up or initiation of a selftest, a fault has been detected in one of the disc drives. (The fault light indication can be followed up by examining the selftest indicator LEDs on the rear of the instrument and consulting the "Selftest Results" section of the Appendix.)

The ON LINE indicator is on whenever the Winchester disc is accessed for data storage or retrieval, and momentarily when the drive is powered up.

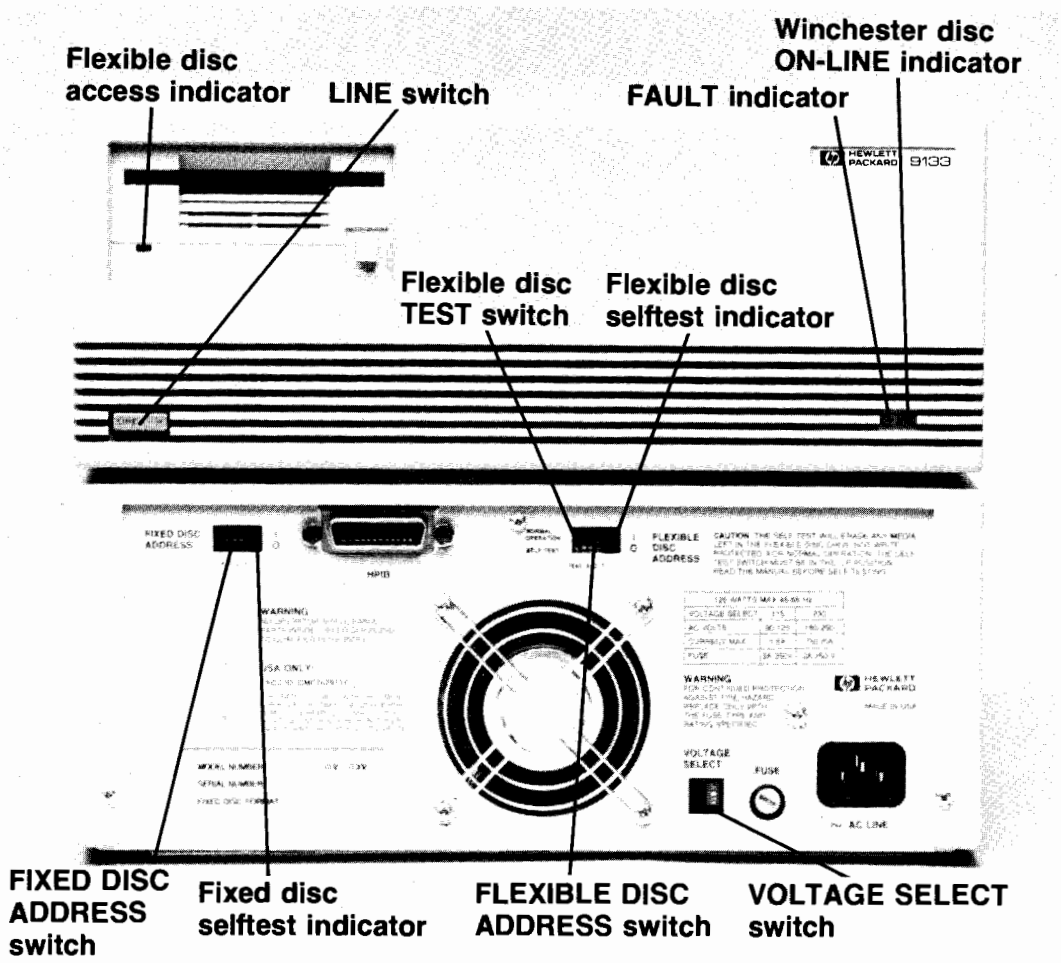

Figure 3-1. 9133V/XV Controls and Indicators

The flexible disc access indicator is on whenever the flexible disc is accessed for data storage or retrieval and momentarily when the drive is powered up.

The selftest indicators for the flexible disc drive and the Winchester disc drive are visible through the device address holes on the rear panel, and can be checked to determine which drive is defective if the FAULT indicator is on or flashing.

Power-On Selftest

A selftest is performed on both the flexible disc drive and the Winchester disc drive when power is applied to the disc memory. The FAULT indicator combines the indication from the flexible disc selftest indicator and the Winchester disc selftest indicator. It will be on continuously during the time the selftests are being performed. If the FAULT indicator is not on after the selftest is completed (about 30 seconds) the test has been completed successfully. The FAULT indicator will remain on or be flashing if the tests have detected a failure in either drive.

User Confidence Selftest (Flexible Disc Drive)

The extent of the test depends upon whether there is a formatted disc in the flexible disc drive, and, if so, whether or not it is write protected. If there is no disc in the drive, the controller electronics are tested. If the disc in the drive is write protected, the controller, read electronics, and drive are tested. If the disc is not write protected, the controller, read and write electronics, and drive are tested. Details of the User Confidence Selftest are given in the Initial Checkout section below.

Additional Flexible Disc FAULT Indications

Two other conditions associated with the flexible disc cause the FAULT indicator to come on and stay on until the condition disappears. These conditions are a command sequence-error over the HP-IB (from the host controller) and a data error from the disc. Whenever these conditions occur it is best to retry the last operation. If a retry is successful, the error and error indication are cleared. If the condition remains after several retries remove the flexible disc from the drive and check the disc surface on both sides of the disc for scratches. If any scratches are found, backup the disc immediately. If no scratches are found, the user confidence selftest should be run as described in the Initial Checkout section.

CAUTION

THE FLEXIBLE DISC ACCESS LIGHT ON THE FRONT OF THE DRIVE INDICATES USAGE OF THAT DRIVE. DO NOT DEPRESS THE DISC EJECT BUTTON OR REMOVE POWER FROM THE DRIVE WHEN THE ACTIVITY LIGHT IS ON AS THIS MAY CAUSE DATA TO BE LOST.

Initial Power-on and Operating Procedure

CAUTION

KEEP THE FRONT AND BACK OF THE DISC MEMORY FREE FROM OBSTRUCTIONS TO AVOID RESTRICTING THE AIR FLOW. FAILURE TO DO SO COULD CAUSE THE UNIT TO OVERHEAT AND RESULT IN DAMAGE TO THE DISC MEMORY.

Before turning the disc memory power on, check the setting of the VOLTAGE SELECT switch on the rear panel (see Chapter 2) to ensure that it is correct for your line voltage. If this is the first time the drive has been turned on, make sure the HP-IB cable is not connected and perform the procedures under Initial Checkout. Otherwise, connect the HP-IB cable from the computer to the disc memory and proceed as follows, omitting the Initial Checkout section.

Set the LINE switch on the front panel to the "ON" or "1" position. The FAULT indicator will come on during the power-up selftest and then go off about 30 seconds after the application of power if the selftest of both drives is successful. The FAULT indicator will remain on or be flashing if either drive fails the selftest.

Initial Checkout

The first time the disc memory is turned on, perform the User Confidence Selftest to assure that the disc has not been damaged in shipment.

User Confidence Selftest

1. Remove all HP-IB cables from your disc memory.
2. Insert a disc that is not write protected into the flexible disc drive. The disc may be initialized but it is not necessary.

CAUTION

ALL DATA ON THE DISC WILL BE DESTROYED WHEN SELFTEST IS PERFORMED WITH A DISC WHICH IS NOT WRITE PROTECTED.

3. Move the TEST switch on the rear panel (Figure 3-1) to SELFTEST (down) position for five seconds and then back to the NORMAL OPERATION (up) position. The switch MUST be in the NORMAL OPERATION position before the disc memory is used.
4. Check the results of the test on the front panel FAULT indicator and on the flexible disc selftest indicator visible through the FLEXIBLE DISC ADDRESS switch cutout on the rear panel. Successful completion of the test is indicated if the FAULT indicator on the front panel and/or the flexible disc selftest indicator flash 10 times and then remain off. Failure of the selftest is indicated if the indicators turn on for 5 seconds and then turn off.

Flexible Disc Procedures

Flexible Disc Description and Write Protection

The 3 1/2-inch flexible disc is enclosed in a rigid plastic shell for extra protection and reduced disc-to-case friction (see Figure 3-2). A metal centering hub ensures rapid and accurate positioning when the disc is inserted in the drive. The disc shutter, which automatically opens the head access window when the disc is in the drive and then closes the window when the disc is removed from the drive, protects the recording surface from foreign object contamination.

A micro-flexible Disc is not write protected when received. Prepare the disc for write protected operation as follows (see Figure 3-3):

1. Lift the free end of the write protect tab and break it off.
2. Align the protrusion on the tab with the slot in the disc.
3. Depress the tab into the groove - tab should fit snugly.
4. Slide the tab away from the center of the disc to complete the write protection procedure.

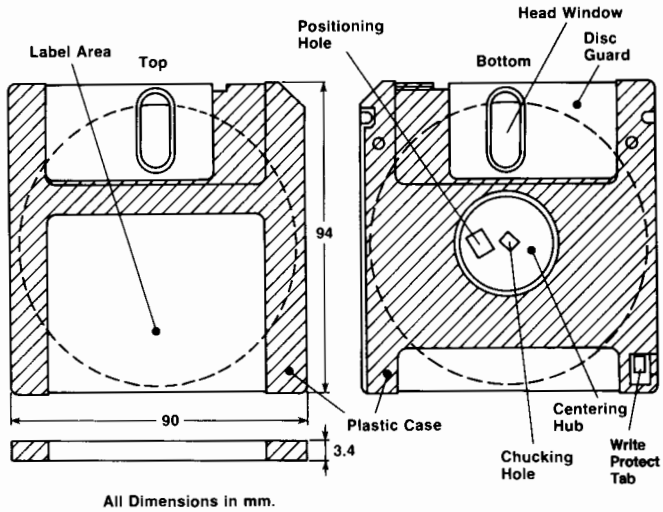

Figure 3-2. The 3 1/2-inch Flexible Disc

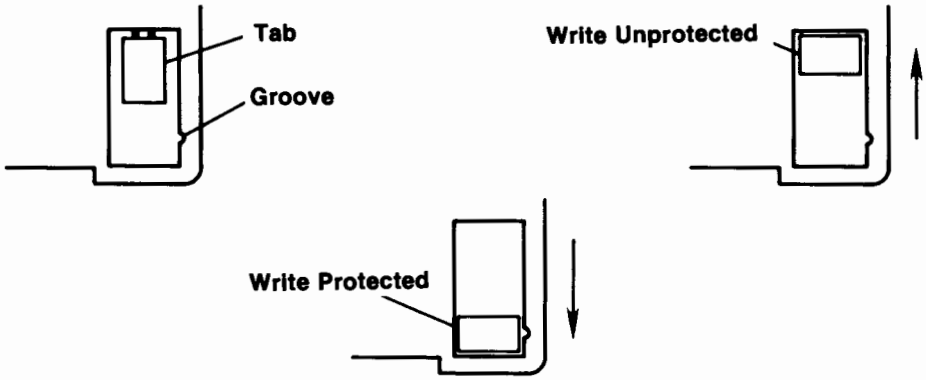

Figure 3-3. 3 1/2-inch Flexible Disc Write Protection

Write Protect Error on Initialization

A motor speed check is performed when a disc is inserted to be initialized. If the motor speed is on either side of the tolerance allowed, a Write Protect Error is generated and the disc is not initialized. If this error should occur, check the flexible disc to ensure that it is not write protected. (See the preceding section). If the disc is not write protected, then try to initialize another flexible disc which is not write protected. If the second disc initializes correctly, the first disc was defective and should be discarded. If the second disc also fails to initialize, perform the user confidence selftest (described in the Initial Checkout section of this manual) to check the disc drive.

Inserting and Removing the Flexible Disc

To insert and remove flexible discs:

1. Do not insert the disc into the drive without power applied.
2. Insert the disc with the metal shutter toward the drive and the metal centering hub down. Carefully slide the disc into the drive until you feel it contact the rear of the drive.

Continue pressing the disc until it is pulled down into the drive.

3. Remove the disc by depressing the disc eject button and pulling the disc straight out. Make sure the shutter is closed before storing the disc.

NOTE

There is no write protect capability on the Winchester drive. Caution must be used to avoid writing over data stored on the Winchester disc.

Media Monitor

The proper time to discard each disc which you have been using is normally indicated by the Media Monitor in the flexible disc memory. When the disc is approaching the end of its useful life but before becoming so badly worn that data is actually lost the Media Monitor will continuously make a clicking sound and blink the flexible disc access light. This warning indication will continue until you remove the disc from the drive and reinsert it, or your computer sends a command to the drive. If the disc is removed and reinserted, the warning indication will resume after another 1 minute 40 seconds of head loaded operation has occurred. If a command is received from the computer the drive will accept and perform the command and then immediately resume the warning indication.

You should immediately copy everything on your disc to a new disc and discard the old one when the Media Monitor warning occurs. Continued use of the old disc after the initial warning will result in eventual automatic write protection of the disc by the drive controller.

Media Wear Indication

Checking for wear is a simple visual inspection of the disc surface before you insert the disc into the drive. When viewing the disc surface you should look for any signs of deep circular scratches . This is done by sliding open the disc guard, revealing the disc surface. If you see any sign of deep circular scratches on either side of the exposed surface, the disc should be immediately copied and discarded. Circular scratches on the upper (label side) surface of the disc indicate load pad wear. The load pad should be checked by a qualified service person and replaced if necessary.

Chapter 4
Troubleshooting

Introduction

This chapter provides the physical location of key components, and a list of replaceable parts.

The following topics are discussed in this chapter:

Repair Philosophy
  Exchange Assemblies
Support Packages Contents Lists
  Product Support Package (PSP)
  Field Support Inventory Package (FSI)
Recommended Field Support Inventory
Controller Assembly

Repair Philosophy

The 3 1/2-inch Disc Drive assemblies are serviced on the exchange program. The assembly includes the drive and drive electronics board (the PC board attached to the lower side of the drive).

Exchange Assemblies

The following assemblies are exchange assemblies for the 3 1/2-inch drive portion of the 9133 Disc Memory:

3 1/2-inch Flexible Disc Drive -- 09121-69501
Controller Assembly -- 09133-69509

Support Packages Contents Lists

The following packages lists are the contents for the PSP and the FSI.

Product Support Package (PSP) -- 09121-67100

09121-88810 -- Pad Weight
09121-89400 -- Disc, Alignment
09121-89401 -- Disc, Level
09121-89405 -- Disc, Cleaning
  8750-0051 -- Gauge, Tension
  5061-2808 -- HP-85 Test Package
09121-90030 -- Manual, Service

Field Inventory Parts Package (FSI) -- 09121-67197

09133-66500 -- Controller Assembly-9133
09133-69509 -- 3 1/2-inch Controller Assembly
09121-69501 -- 3 1/2-inch Flexible Disc Drive
09121-68501 -- Fan Assembly
09121-88811 -- Pad, Head Load
2110-0587 -- Fuse, 2A

Recommended Field Service Inventory

The following list of parts and assemblies is recommended for building your Field Service Inventory (FSI).

09121-69501 -- 3 1/2-inch Flexible Disc Drive
09133-69509 -- 3 1/2-inch Controller Assembly

Controller Assembly

The 3 1/2-inch controller electronics assembly with test points indicated is shown in Figure 4-1.

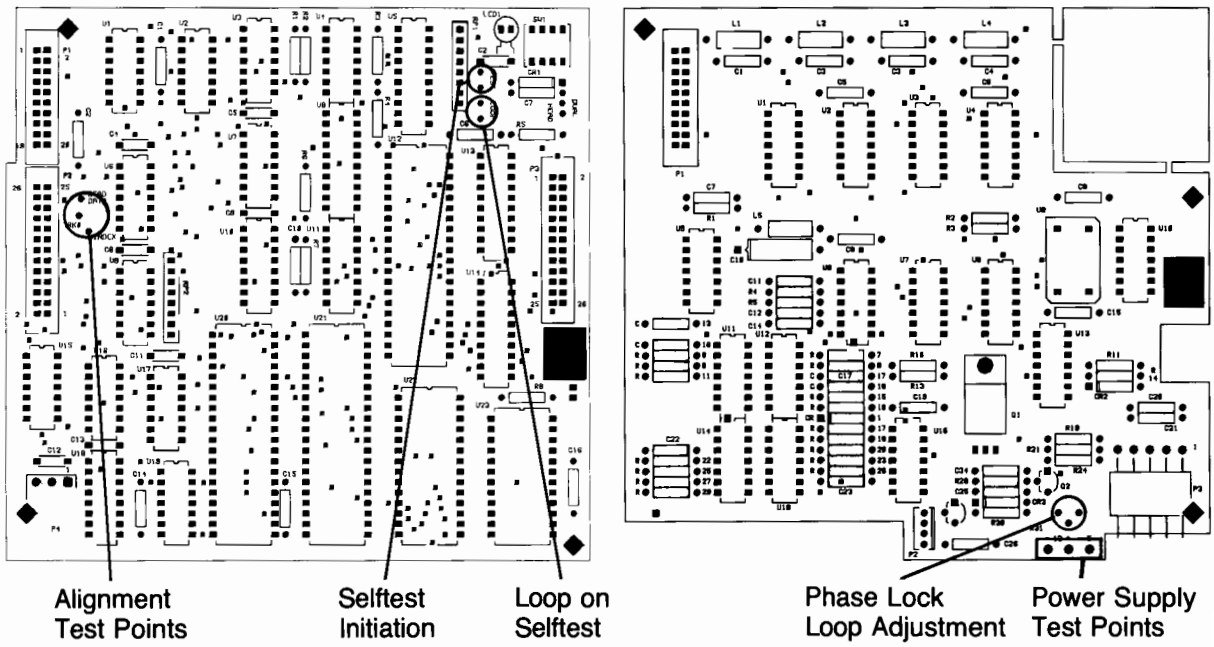

Figure 4-1. Controller Assembly Test Points

Chapter 5
Assembly Access

Introduction

This chapter describes access to 9133V/XV Disc Memories and removal of the 3 1/2-inch disc drive and the printed circuit assemblies (PCAs) controlling it. Information about the Winchester drive and about the power supply for the 9133V/XV is contained in the Winchester drive service manual.

The following topics are discussed in this chapter:

- Safety Considerations
- Top Cover Assembly Removal
- Front Panel Assembly Removal
- 3 1/2-inch Drive Removal
- Controller PCA Removal

Safety considerations

General

This product and related documentation must be reviewed for familiarization with safety markings and instructions before operation.

Safety Symbols

Instruction manual symbol: the product will be marked with this symbol when it is necessary for the user to refer to the instruction manual in order to protect the product against damage.

Indicates hazardous voltages.

Indicates earth (ground) terminal (sometimes used in manual to indicate circuit common connected to grounded chassis.

WARNING

The WARNING sign denotes a hazard. It calls attention to a procedure, practice, or the like, which, if not correctly performed or adhered to, could result in injury. Do not proceed beyond a WARNING sign until the indicated conditions are fully understood and met.

CAUTION

The CAUTION sign denotes a hazard. It calls attention to an operating procedure, practice, or the like, which if not correctly performed, could result in damage to, or destruction of, part or all of the product. Do not proceed beyond a CAUTION sign until the indicated conditions are fully understood and met.

Safety Earth Ground

This is a safety class I product and is provided with a protective earthing terminal. An uninterruptible safety earth ground must be provided from the main power source to the product input wiring terminals, power cord, or supplied power cord set. Whenever it is likely that the protection has been impaired, the product must be made inoperative and be secured against any unintended operation.

Before Applying Power

Verify that the product is configured to match the available main power source per the input power configuration instructions provided in this manual, and that the correct primary fuse rating is installed.

If this product is to be energized via an auto-transformer (for voltage reduction), make sure the common terminal is connected to the earth terminal of the main power source.

Servicing

Any servicing, adjustment, maintenance or repair of this product must be performed only by service-trained personnel.

Adjustments described in this manual may be performed with power supplied to the product while protective covers are removed. Energy available at many points may, if contacted, result in personal injury.

Capacitors inside this product may still be charged even when the product is disconnected from its power source.

To avoid a fire hazard, only fuses with the required current rating and of the specified type (normal blow) are to be used for replacement.

NOTE

Disassembly instructions are written as if viewing the disc device from the front. That is, right = the viewer's right; left = the viewer's left; "front" = the front of the device; and "rear" = the rear of the device.

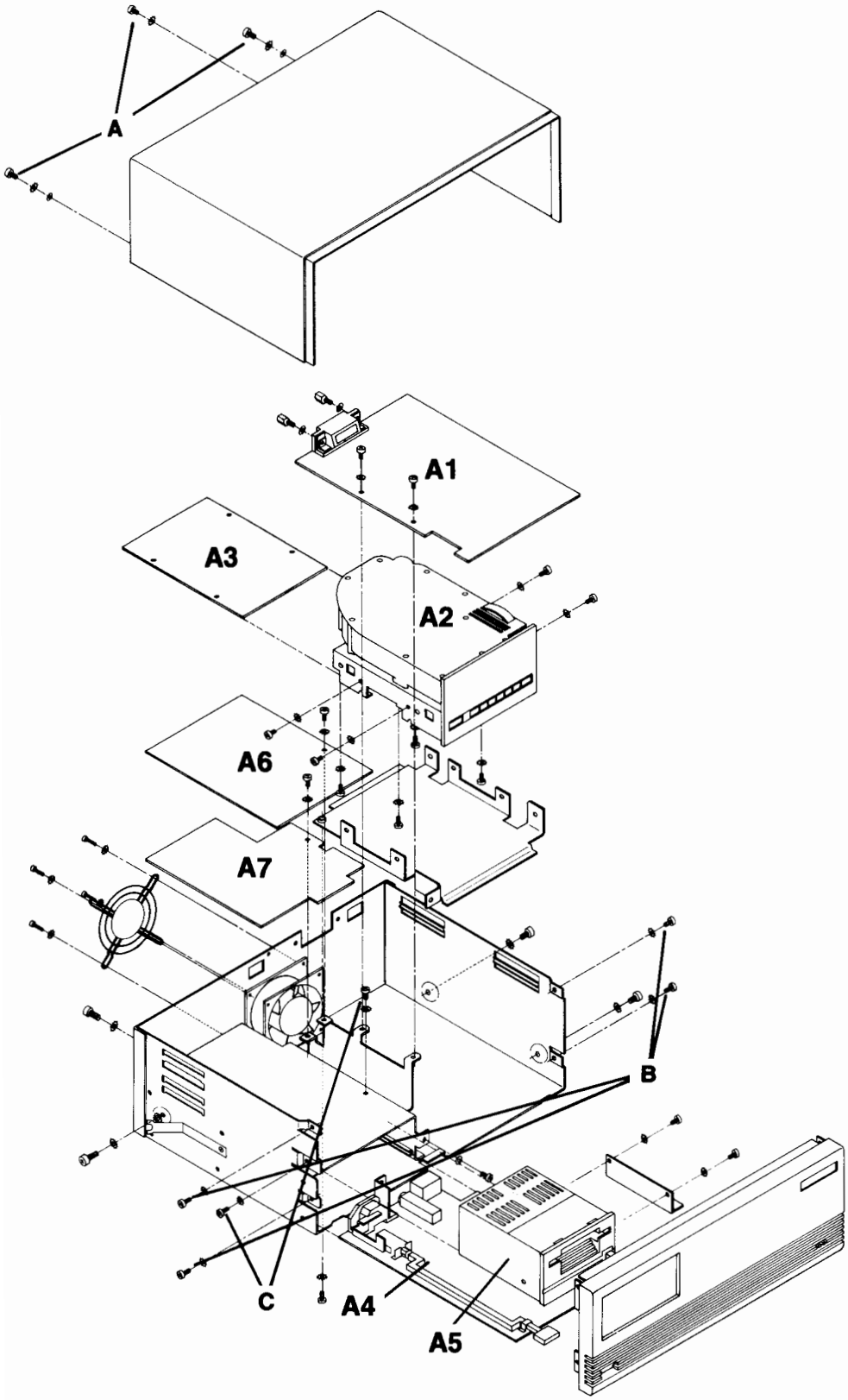

Figure 5-1. The 9133V/XV Exploded View

Assembly Designations

The following assembly numbers are used to designate cable connections:

A1	Winchester Controller PCA (09133-69508)
A2	Winchester Drive
A3	Winchester Drive Electronics PCA
A4	Power Supply
A5	3 1/2-inch Drive
A6	3 1/2-inch Drive Controller, Upper Board (09133-69506)
A7	3 1/2-inch Drive Controller, Lower Board (09133-69507)

Top Cover Assembly Removal

The Top Cover Assembly consists of an injection molded plastic shroud and a steel shield shroud. To remove the assembly, remove three screws on the rear of the instrument (marked "A" in Figure 5-1.)

DO NOT LIFT THE COVER. Instead, slide the cover assembly to the rear until it is clear of the front panel and the HP-IB connector nuts. Then lift the cover assembly from the instrument. See Figure 5-2.

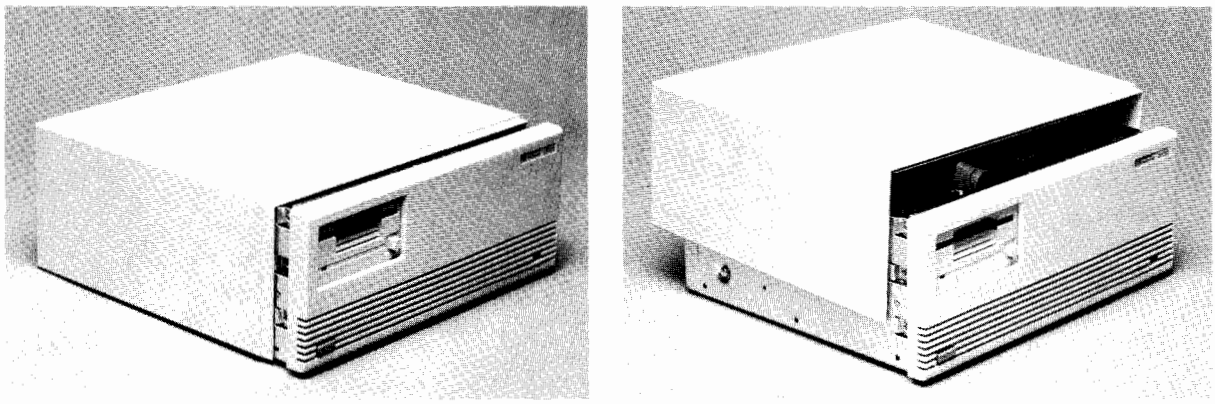

Figure 5-2. Top Cover Assembly Removal

Front Panel Assembly Removal

The Front Panel Assembly must be removed for access to the 3 1/2-inch Drive. The controller boards (09133-69506 and 09133- 69507) can be removed without removing the Front Panel Assembly.

The Front Panel assembly consists of an injection molded plastic panel and a steel shield.

Remove the assembly as follows:

1. Remove the four-pin LED cable plug from A1J8. See Figure 5-3.
2. Remove four screws marked "B" , two on each side of the instrument.
3. Slide the panel to the front, clear of the instrument.

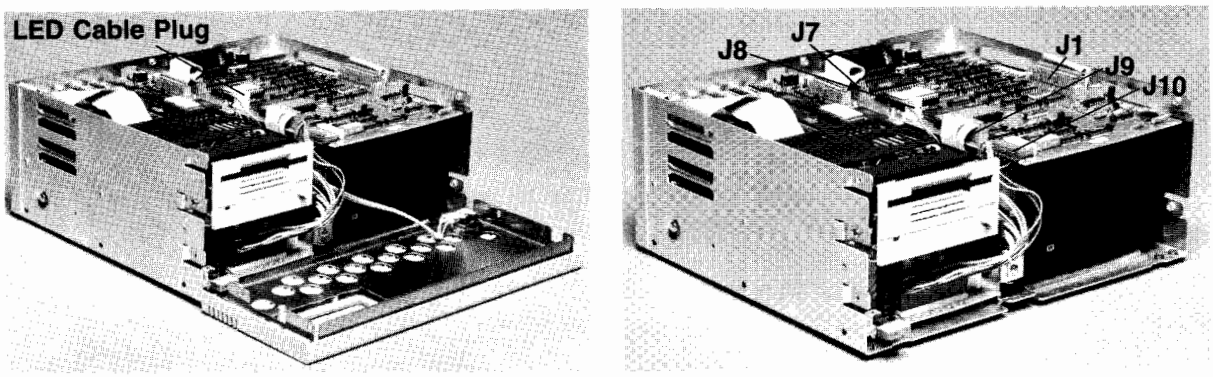

Figure 5-3. Front Panel Assembly Removal

Controller PCA Removal

The controller PCA in 9133V/XV products consists of two boards, 09133-69506 and 09133-69507, located immediately behind the 3 1/2-inch drive. These boards can be removed without removing the drive itself.

To remove the upper board (09133-69506) proceed as follows:

1. Detach the HP-IB cable from A1J7. Leave the cable attached to the upper board (A6).
2. Detach the Board Interface cable from A6P1 and the drive controller cable from A6P2.
3. Remove the mounting screw from the right side of the board.
4. Lift the board clear of the chassis and flexible disc drive. Remove the three pin power connector from A6P4.

To remove the lower controller board (09133-69507), proceed as follows:

1. Remove the mounting screw from the right side of the board.
2. Remove the power connector from A7P3.

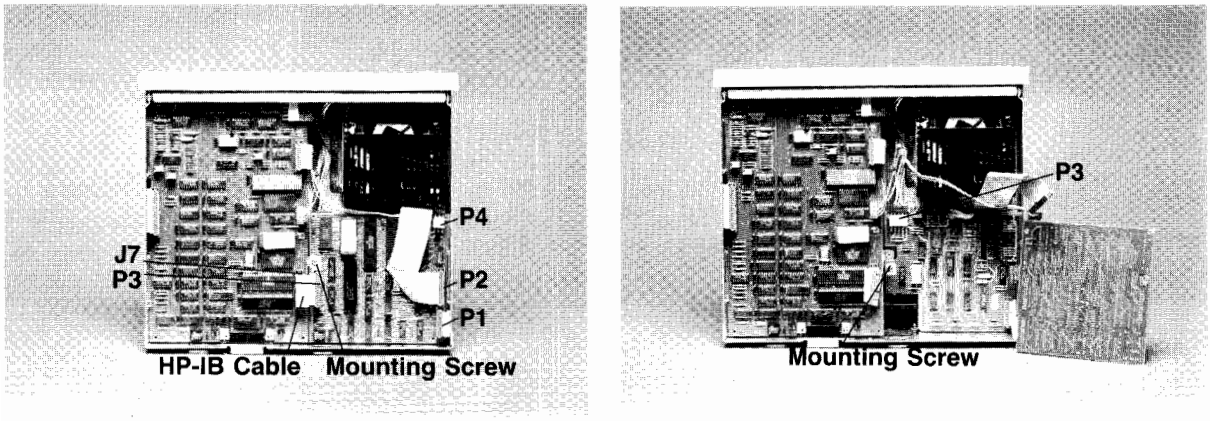

Figure 5-4. Controller PCA Removal

During reassembly, note that both boards slide into lanced board guides on the left side of the chassis.

3 1/2-inch Drive Removal

To remove the flexible disc drive assembly, it is necessary first to remove the Top Cover Assembly and the Front Panel Assembly.

With this done, proceed as follows:

1. Detach the drive controller cable from A6P2. (See Figure 5-4)
2. Remove two mounting screws marked "C" on Figure 5-1. One screw is located on the front left side of the chassis; the other connects the L-shaped bracket on the right side of the drive to the power shield.
3. Slide the drive assembly forward and remove the four-pin white connector from the rear of the drive.
4. Slide the drive assembly to the front and free of the instrument.

If a defective drive is to be returned for replacement, remove the L-shaped bracket on the right side of the drive assembly and reconnect it to the power shield until the replacement drive is received. This bracket is not part of the replaceable assembly. See Figure 6-5.

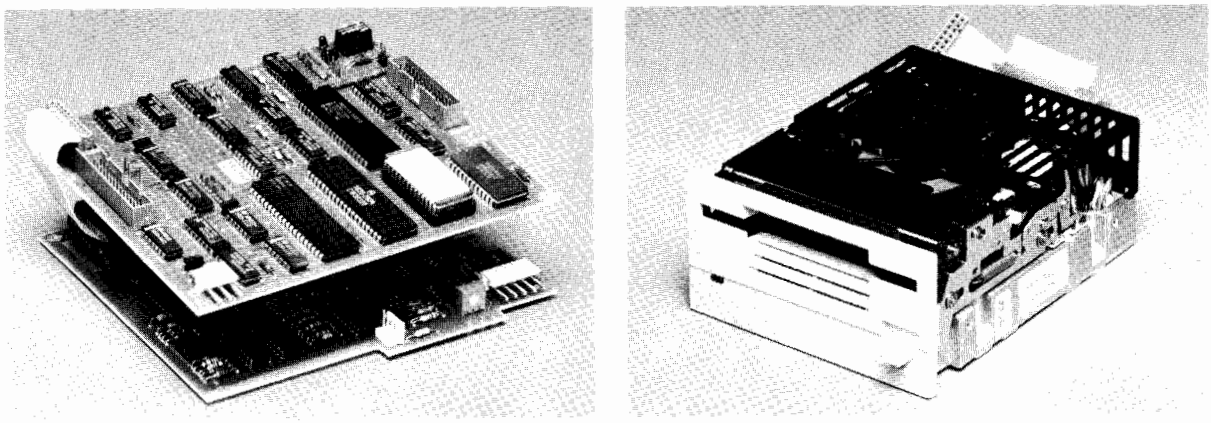

Figure 5-5. Replaceable Assemblies

Field Replaceable Units

The field replaceable units for the 3 1/2-inch section of the disc memory are as follows:

a) 09121-695111 flexible disc drive
b) 09133-69509 3 1/2-inch controller assembly
c) 5061-3144 power supply

Parts List

This section contains the parts list for the Disc Memory. The check digit (CD) is required when a part is ordered from HP, so please include this information with your order.

Level	Reference Designator	HP Part No.	CD	Description
		Case Parts		
1		0403-0427	1	BUMPER FOOT
1		0510-1237	0	FASTNER
1		07940-00026	7	FAN GUARD
1		07940-40062	5	SHAFT SWITCH
1		09121-48301	4	BUTTON, PUSH
1		09121-48303	6	FOOT-MOLDED
1		09133-00602	2	FRT SHIELD-33
1		09133-01201	9	BRKT,FLPY
1		09133-20101	8	CHASSIS - 9133
1		09133-40201	1	FRT PNL- 9133
1		09133-88865	3	SHIELD/SHROUD ASSY
1		09133-84304	7	FRT PNL LABEL-33
1		09144-45404	9	GUARD, POWER
		Electrical Assemblies		
1		09133-42501	8	LIGHT PIPE
1		09133-61601	9	POWER HARNESS
1		09133-61602	0	DISC CTLR CABLE
1		09133-61604	2	HPIB CABLE
1		09133-61606	4	LED/PWR CABLE
1		09133-61609	7	FLOPPY CTLR CBL
.2		09133-61610	0	FDC INTER CABLE
1		09133-61611	1	FLPY POWER CBL
1		09133-68501	2	FAN ASSEMBLY
1		5061-3144	4	POWER SUPPLY
1		8120-1378	1	CABLE-POWER
		Fuses		
1		2110-0003	0	FUSE-3AMPS NB
1		2110-0002	9	FUSE 2A 250V
		Exchange Assemblies		
1	**A5**	**09121-69511**	**2**	**FLEXIBLE DISC DRIVE**
1		**09133-69509**	**2**	**3 1/2-INCH CONT. ASSY**
.2		**09133-61610**	**0**	**FDC INTER CABLE**
.2	**A6**	**09133-66506**	**9**	**FLPY CTLR BD-I**
..3	C1,3,6,7,14-16	0160-4832	4	C-F .01UF 10%
..3	C2,4,5,8,9,11-13	0160-5332	1	C-F .1UF 20% 50V
..3	C10	0160-5349	0	C-F 200PF 5%
..3	TRKO.TEST LOOP. INDEX.READ DATA	0360-0124	3	STUD-TERM
..3	R5	0683-1015	7	R-F 100 OHM .05
..3	R3,4,6,8	0683-1025	9	R-F 1K 5% .25W
..3	R7	0757-0430	5	RES 2.21K 1%
..3	R1,2	0757-0442	9	R-F 10.0K 1/8W
..3	U22	1200-0861	8	SKT-IC 28-CONT
..3	DUAL HEAD	1251-5380	3	CONN 2 PIN M
..3	P1	1251-8681	3	20 PIN CONNECTOR
..3	P2,3	1251-8682	4	CONNECTOR,26 PIN
..3	P4	1251-8693	7	RT ANGL POST HDR
..3	RP1,2	1810-0204	6	NTWK-R 7X1K SIP
..3	U23	1818-1178	1	IC MK 4118AN-3
..3	U7,15	1820-0471	0	IC SN7406N
..3	U17	1820-1112	8	IC 74LS74
..3	U3,6,19	1820-1197	9	IC 74LS00

Level	Reference Designator	HP Part No.	CD	Description
..3	U1,16	1820-1199	1	IC 74LS04
..3	U4	1820-1201	6	IC SN74LS08N
..3	U2	1820-1202	7	IC 74LS10N
..3	U11	1820-1216	3	IC SN74LS138
..3	U18	1820-1300	6	IC SN74LS195N
..3	U9	1820-1416	5	TTL TRGR 74LS14N
..3	U10	1820-1437	0	IC SN74LS221
..3	U8	1820-1730	6	IC SN74LS273N
..3	U5	1820-2024	3	IC SN74LS244
..3	U14	1820-2483	8	IC SN75161N
..3	U13	1820-2485	0	IC SN75160N
..3	U12	1820-2549	7	IC 8291AP
..3	U21	1820-2624	9	IC 68B09
..3	U20	1820-3006	3	IC MB8876A CTLR
..3	CR1	1901-0050	3	DIO SWITCHING
..3	LED1	1990-0450	4	LED-LMP
..3	SW1	3101-2264	1	SW-RKR 4-1A
..3	U22	09121-15510	8	SONY CTRL E PROM
.2	**A7**	**09133-66507**	**0**	**FLPY CTLR BD-II**
..3	C11,13,14,20,21,24-26	0160-4571	8	C-F .1UF + 80
..3	C23	0160-4574	1	C-F 1000PF 10%
..3	C17	0160-4805	1	C-F 47PF 5% 100V
..3	C18	0160-4830	2	C-F 2200PF 10%
..3	C5-9,15,19	0160-4832	4	C-F .01UF 10%
..3	C1-4,16,22	0160-5349	0	C-F 200PF 5%
..3	C10	0180-1746	5	C-F 15UF 20V
..3	R1-3,7,16,30	0683-1025	9	R-F 1K 5% .25W
..3	R11,13-15,19,21,24,28	0683-1035	1	R-F 10K .05 1/4W
..3	R5	0698-3132	4	R-F 261 OHM .01
..3	R9,29	0698-3154	0	R-F 4.22K 1%
..3	R10,26	0698-3442	9	R-F 237 OHM 1%
..3	R17,20,22,25	0698-3445	2	R-F 348 OHM 1%
..3	R18,23	0757-0280	3	RES 1.00K 1/8W
..3	R4,6,8	0757-0417	8	R-F 562 OHM 1%
..3	R12,27	0757-0442	9	R-F 10.0K 1/8W
..3	P2	1251-7018	8	CONN POST TO HDR
..3	P3	1251-7862	0	CONN-POST-TP-HDR
..3	P1	1251-8681	3	20 PIN CONNECTOR
..3	U9	1813-0194	9	XTAL-CLK-OSC
..3	U13,16	1820-0471	0	IC SN7406N
..3	U8	1820-1112	8	IC 74LS74
..3	U3	1820-1197	9	IC 74LS00
..3	U4	1820-1201	6	IC SN74LS08N
..3	U10	1820-1202	7	IC 74LS10N
..3	U2	1820-1416	5	TTL TRGR 74LS14N
..3	U5	1820-1433	6	IC SN74LS164N
..3	U1,7	1820-2096	9	IC SN74LS393N
..3	U12,15	1821-0001	4	XSTR-ARRAYCA3046
..3	U6	1826-0210	7	IC LM361
..3	U11,14	1858-0058	8	XSTR ARY MPQ3906
..3	Q2,3	1854-0215	1	XSTR-2N3904
..3	Q1	1855-0548	5	XSTR-MOSFET 12A
..3	CR2,3	1901-0050	3	DIO SWITCHING
..3	CR1	1901-0518	8	DIO- SM-SIG-S
..3	R31	2100-3351	6	RES-TRMR 500 10%
..3		2200-0521	8	SCR-MACH 4-40
..3		2260-0002	6	NUT-HEX 4-40
..3	L5	9100-0539	3	IDCTR (MSIC)
..3	L1-4	9140-0183	7	IDCTR 20UH 10%

GENERAL INFORMATION

CHAPTER 1

Introduction

The HP 9114A Disc Memory (Figure 1-1) is a random access data storage device. The HP 9114A contains a single 3 1/2 inch double sided disc drive providing 710 Kbytes of storage capacity. The HP 9114A is battery-powered by a 6 volt lead-acid dry cell.

The HP 9114A Drive supports both the SUBSET/80 and the FILBERT command set to allow the device to be compatible to existing and future HP-IL devices.

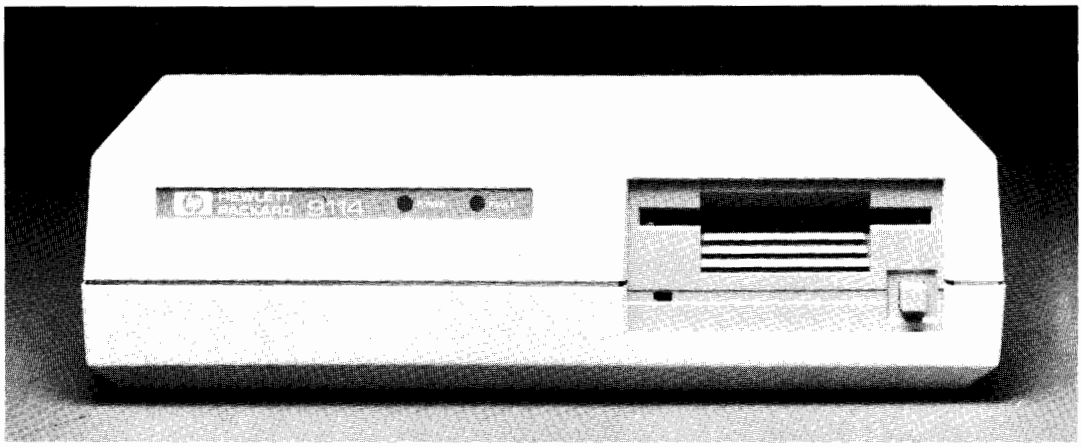

HP 9114A

Figure 1-1. HP 9114A Flexible Disc Memory

Technical Specifications

Listed next are the electrical and physical specifications for the HP 9114A disc memory.

Number of drives	1
Net Weight	2.68kg (5.9 lbs)
Height	76 mm (3.00 in.)
Depth	200 mm (8.00 in.)
Width	287.5mm (11.5 in.)

Printed 6/01/84 Part Number 5957-6557

Interface	HP-IL
HP Double Density Format	
Encoding:	MFM
Rotational Speed:	600 RPM
Bit Density @ 600 RPM:	Track 79 (Inside track) 8717 BPI
Track Density:	135 tracks per inch
Tracks per Surface:	80
Surfaces used per disc:	2

Capacity	HP 110	Series 40 and 70
Bytes/Sector:	512	Max storage capacity will vary depending on the REV firmware used in the 40 and 70 series products. Typical would be 128K bytes.
Sectors/Track:	9	
Bytes/Drive (Formatted):	710 Kbytes	

NOTE

The HP 9114A spares 4 complete tracks. This reduces the usable user space to 512*09*78*2 (bytes/sector times sector/track times unspared tracks times number of sides.) This total equals 718.848 Kbytes. Additionally, directories further reduce usable user space. This, as implemented by HP, generally takes track 0. Actual usable space will be 718.848 Kbytes minus track 0 for a total of 709.632 Kbytes.

Access Time	
Track-to-Track Seek:	15 ms/track plus 42 ms settling
Maximum Track-to-Track Seek (80 tracks):	1242 ms
Average Track-to-Track:	447 ms
Maximum Rotational Latency:	100 ms
Average Rotational Latency:	50 ms
Spindle Motor on time:	400 ms
Maximum Data Access Time (Seek plus Latency plus Motor on time):	1742 ms
Average Data Access Time:	497 ms
Maximum Sustained Transfer rate:	6 Kbytes/second

Maximum sustained transfer rate of the 9114 will be dependent on the number of devices contained within the HP-IL loop. As more devices are added, the apparent data transfer rate decreases.

Power Requirements

The HP 9114A is powered by a 6 volt lead-acid dry cell. The charging time of the battery to 80% of capacity is approximately five hours. The standby life (no access to the disc) is greater than three days. The following table shows the estimated battery life at various duty cycles.

TIME BETWEEN DISC ACCESSES	BATTERY LIFE WITHOUT CHARGER	BATTERY LIFE WITH CHARGER
0 SECONDS	40 MIN	60 MIN
10 SECONDS	75 MIN	2 HRS
30 SECONDS	2 HRS	3 HRS
60 SECONDS	4 HRS	20 HRS
90 SECONDS	6 HRS	CONTINUOUS

AC Adapter/Recharger

The adapter/recharger can be connected to the disc drive at any time. If you connect the recharger during read/write operations (disc access light is on), avoid jarring the drive.

You can use the disc drive while the battery pack is charging. In fact, it is recommended that you use the adapter/recharger whenever possible, even when the battery is fully charged.

The sealed lead-acid battery operates best on shallow, less than 30% discharge cycles, or constant "trickle" charge with the recharger usually connected.

Normal battery life is 3 to 5 years. Replacement batteries are available; order HP 88014A Rechargeable Battery Pack.

To preserve the maximum capacity of the battery pack, charge it fully and operate as much as possible with the recharger connected.

WARNING

Do not short the battery. This will blow a fuse internal to the battery pack and make the pack inoperative.

Do not incinerate. The battery can burst if thrown into a fire.

Do not put within reach of children.

Do not disassemble the battery. The strong acid electrolyte sealed inside can burn your skin and clothes.

If the battery is accidently broken and the electrolyte (gelled sulfuric acid) leaks out, neutralize the acid with some available alkaline substance, such as ammonium solution or baking powder (sodium hydrogen carbonate) and wipe up the spill with a cloth.

In the event electrolyte contacts the skin, immediately flush with water and consult a doctor.

CAUTION

This battery pack is designed specifically to work with an HP recharger; Therefore HP is not responsible for damages caused by using a non HP recharger.

The adapter/rechargers listed next are recommended for use with the HP 88014A Rechargeable Battery Pack.

Model	AC Voltage	Identification
HP 82059B	90 to 120	United States
HP 82066B	210 to 250	Europe
HP 82067B	210 to 250	United Kingdom
HP 82067B Opt 001	210 to 250	Republic of South Africa
HP 82068B	210 to 250	Australia
HP 82069B	90 to 120	Europe

Environmental Specs

Operating Limits Temperature:	10° C to 40° C(50° F to 104° F) with maximum wet bulb temperature (non-condensing) not to exceed 29° C(85° F)
Altitude:	0 to 4572 m (0 to 15,000 ft)
Non-operating Limits (Storage and Transit) Temperature:	-40°C to 60°C(-40° to 140° F)
Altitude:	-304 to 15240 m (-1000 to 50,000 ft)

NOTE

The flexible disc in the HP 9114A Disc Memory is designed for operation in a typical office environment. Use of the equipment in an environment containing dirt, dust, or corrosive substances will cause the flexible disc drives and media life to be drastically reduced.

Equipment Supplied

Computer Museum

The following equipment is supplied with each HP 9114A disc memory.

Description	Quantity	HP Part Number
AC Adapter/Recharger	1	Dependent on location
HP-IL Cable	1	82167B (1 metre)
Flexible Disc	1	----------
* Operator's Manual	1	09114-90000

A package of ten discs has been set up as a product. This product is orderable using the 92192A product number.

Unpacking Your HP 9114A Disc Memory

Your disc memory was carefully inspected before shipment. Remove the unit from the shipping carton and carefully inspect the unit for any physical damage that may have occurred during shipment. If you find any damage, you should immediately notify your dealer and file a claim with any carriers involved.

CAUTION

THE DISC MEMORY IS A PRECISION INSTRUMENT. MECHANICAL SHOCK CAN MISALIGN THE READ/WRITE HEAD, RESULTING IN READ ERRORS AND/OR DAMAGED DISCS WHETHER THE DISC IS OPERATING OR NOT.

When moving the disc unit, care should be taken to prevent excessive shock. Install the cardboard disc supplied with the product before moving it to another location.

Cleaning the Case

The disc drive case is made from a white plastic material and is not painted. The rear panel has a durable, non-toxic label. In the event of damage to the case finish, consult your HP Sales Office for touchup paints.

CAUTION

Chemical spray-on cleaners used for appliances and other household and industrial applications may damage the case finish. Do not use detergents that contain ammonia, benzenes, chlorides, or abrasives.

Before cleaning the case, disconnect the charger and HP-IL cables. Make sure that any disc is removed from the drive. Dampen a clean, soft, lint-free cloth in a solution of clean water and mild soap. Wipe the soiled areas of the case, making sure that no cleaning solution gets inside the case. For cleaning more heavily soiled areas, a solution of 80% clean water and 20% isopropyl alcohol may be used. Dry the areas that had cleaning solution applied with another clean, soft, lint-free cloth. A non-abrasive eraser may be used to remove pen and pencil marks.

Installation

CHAPTER 2

Connecting the Disc Drive to the System

The disc drive is connected to the computer or computing system using the HP 82167 HP-IL cable. Each device must have two cables connected to it, an "In" and an "Out". This is shown next.

DISC DRIVE AND COMPUTER ONLY

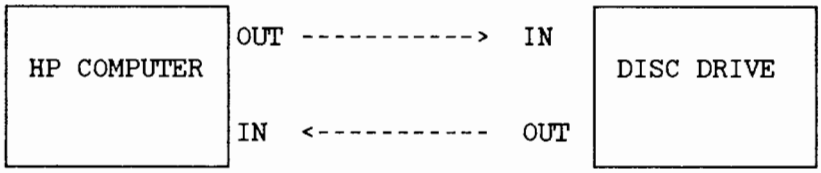

DISC DRIVE AND COMPUTER SYSTEM

These devices can be connected in any order. Also the devices can be in any location.

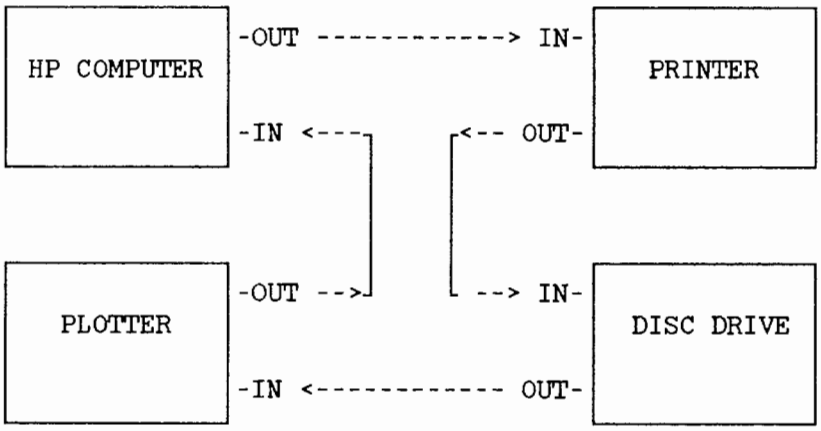

Figure 2-1. System Interconnects

CAUTION

Disc drive performance and reliability are dependent on the type of media used. Disc drive specifications can be assured only when using HP media. The use of improper media can result in premature disc failure or damage to the disc drive.

On some disc products, HP may qualify other non-HP media. When tested, this media met HP specifications. However, HP does not warrant or support this media and cannot control changes in its specifications or quality. The selection and use of such products is the customer's responsibility. HP reserves the right to exclude from warranty and maintenance agreement coverage any repairs which HP reasonable determines or believes were caused by the use of media not provided by HP. HP will upon request provide such repairs on a time and material basis.

Warranty and maintenance agreement coverage of repairs not caused by the use of non-HP media is unaffected.

Installing the AC Adapter/Recharger

The power light on the front panel flashes whenever it's time to charge the battery. When you get the low battery indication, the battery provides a reserve operating time of about five minutes, or a standby time of about thirty minutes. After the battery voltage drops below a minimum, the drive will not respond to read or write operations. This is to protect your data.

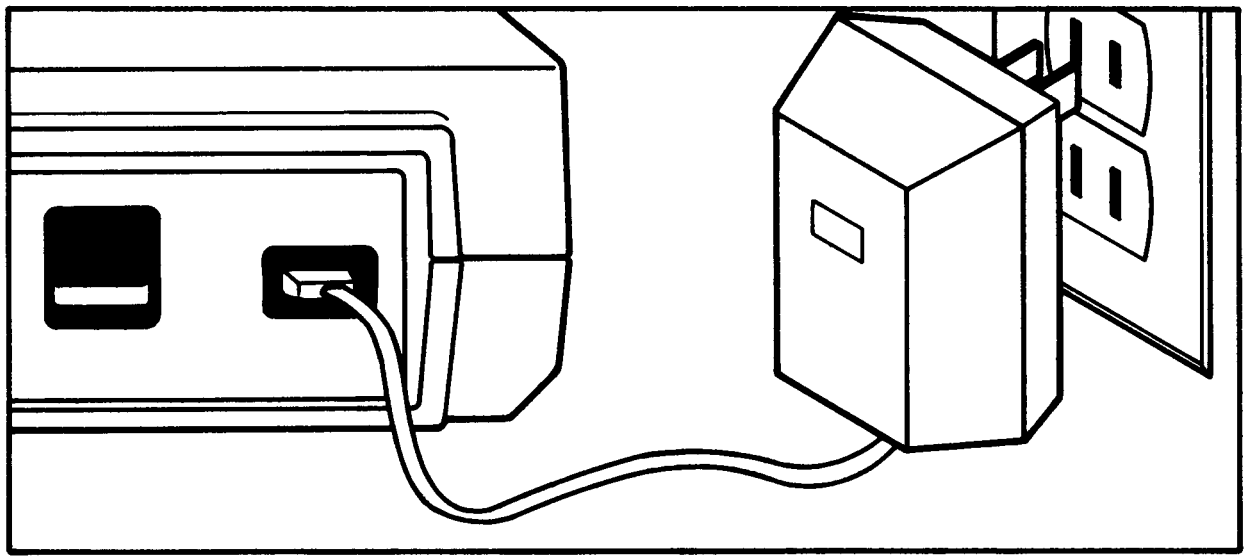

Figure 2-2. Connecting the Adapter/Recharger

The adapter/recharger can be connected to the disc drive at any time. If you connect the recharger during read/write operations (disc access light is on), avoid jarring the drive.

Insert the adapter/recharger plug into the recharger receptacle on the back of the disc drive.

Insert the power plug of the adapter/recharger into an AC power outlet.

You can use the disc drive while the battery pack is charging. In fact, it is recommended that you use the adapter/recharger whenever possible, even when the battery is fully charged.

Loading the Flexible Disc

To insert and remove flexible discs, perform these steps.

1. Remove the cardboard disc from the drive by pressing the disc eject button.

2. Hold the disc with the label up (centering hub down).

   If you have a disc that is NOT auto shutter, you must manually open the shutter before inserting the disc into the drive or the disc will not drop into the drive.

3. Slide the disc into the drive (shutter side first) until you feel the disc drop into the drive. The disc physically drops about 1/8 inch. Do not force the disc.

4. Remove the disc by pressing the disc eject button. Pull the disc straight out.

CAUTION

Never turn the disc drive off or remove the disc from the drive when the disc access light is on; doing so can cause loss of data.

After connecting the HP9114 to the system, locate the power (on/off) button on the back panel. This is a rocker switch with labeling on each side, "0" and "1". Pressing in the rocker on the "0" side, turns the drive off. Pressing in on the side labeled "1" turns the drive on. Now, let's turn it on.

Power-on Selftest

A power-on selftest is performed automatically when you turn on the disc drive. The Fault light is the selftest indication. This light is on when selftest is in operation. The selftest takes approximately 6 seconds after which the fault light goes out. If you have a disc inserted in the drive, read and write testing (involving the disc) takes an additional 5 seconds or a total of approximately 11 seconds. If the Fault light stays on after the normal testing time an error within the disc drive has been detected. If this ever happens, please see Chapter 4. Make sure that the disc used in the selftest is not write protected. If this disc is write protected, only the 6 second test is performed.

The selftest will check the HP-IL, FDC, RAM, ROM, and the PIA chips during the first half of the test. The second half of the test will attempt to do a write/read on system track 79 of an initilized discette only if the disc is installed and if it is initilized.If neither of these conditions are met, only the first half of the test is performed.

If any of the test metioned fail, please refer to chapter 4 for further information to isolate the problem.

Media Monitor

Through a feature called Media Monitor, the disc drive automatically monitors the cumulative use of each individual disc. When the usage of a disc is approaching a level at which there is a risk of loss of data through normal disc wear, the disc access light on the front panel blinks and a clicking sound is heard. Once this point has been reached in the life span of a disc, read and write commands are still performed by the computer. However, after a command has been performed, the disc drive immediately resumes the warning indication.

When the Media Monitor warning occurs, immediately copy your disc. If you continue to use this disc, the disc drive will eventually automatically write protect the disc. After that time, you will only be able to read data from the disc or copy the disc.

Write Protect Error on Initialization

A motor speed check is performed when a disc is inserted into the drive. If the motor speed is on either side of the tolerance allowed, a Write Protect Error is generated and the disc cannot be initialized or used. If your drive is operating properly, this indication is one of a defective disc. Discard the disc.

Controls and Indicators

Computer Museum

FRONT PANEL

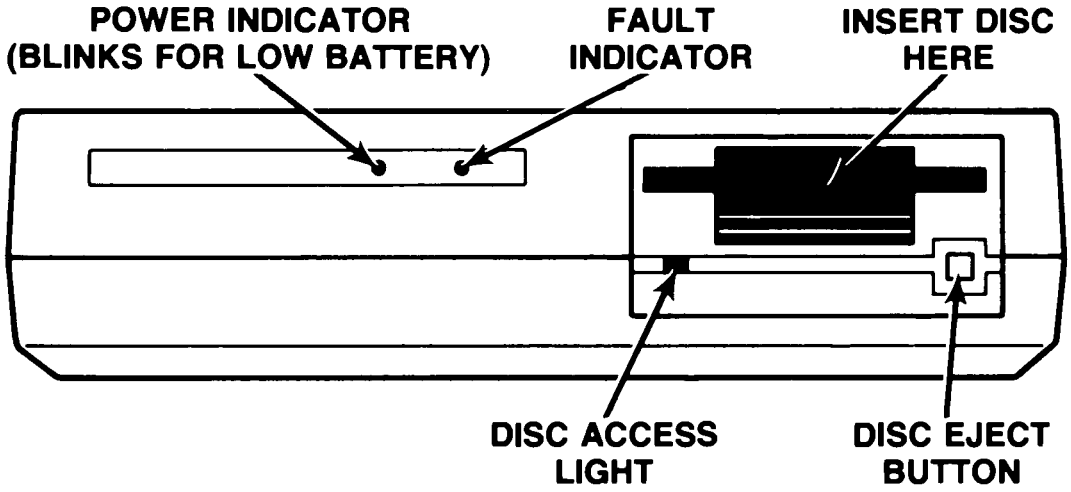

REAR PANEL

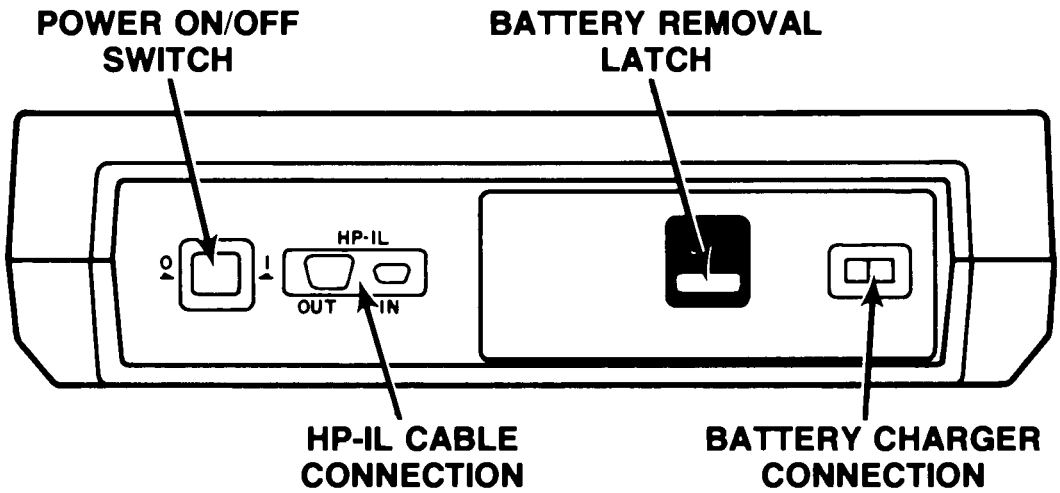

Figure 2-1. Controls and Indicators

Interface Information

CHAPTER 3

HP-IL (Hewlett Packard Interface Loop) is a medium speed, serial communications interface. It communicates one bit at a time over a two-wire cable connecting devices and controllers.

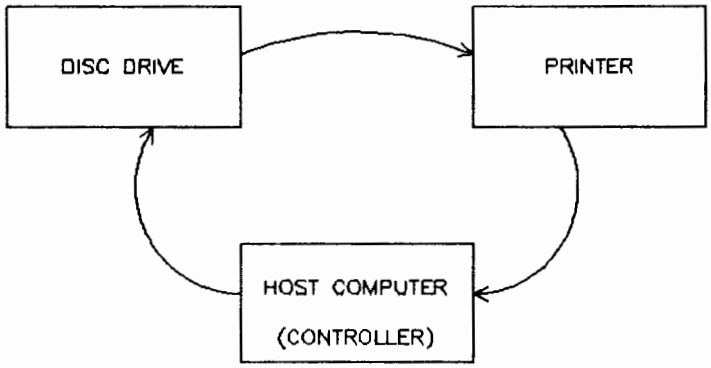

A simple HP-IL system

There are three types of devices in an HP-IL system: Talkers, listeners, and controllers. Talkers send data over the loop. Listeners receive from a talker, or commands from a controller.

Controllers are in charge of all loop operations. They assign addresses to devices, assign device roles, service device requests, and initiate the transfer of data from talker to listener(s). Messages originate at a controller or talker, circulate around the loop to each device and return to the source.

Device addressing is determined by device location in the loop. The host first sends an auto-address command around the loop to initiate addressing; the first device in the loop accepts the first address (1), increments the address by 1, and passes it to the next device in the loop. The devices continue to accept their address, increment, and pass until all devices have an address.

HP-IL will support up to 31 devices on a loop. The maximum supported length is 10 meters per device. Though the theoretical maximum transfer rate is 20 Kbytes per second, the maximum achievable rate is 6 Kbytes per second using currently available equipment.

For more detail on HP-IL, see the defining document: "HP-IL Interface Specification", part number 82166-90017.

Troubleshooting

CHAPTER 4

Repair Philosophy

The 3 1/2-inch disc drive assembly is serviced on the exchange program.The assembly includes the drive and drive electronics board.

The selftest and alignment procedures are given to enable you to isolate problems and correct misalignment in the field.

Power supply information is presented in each tabbed section. Controller assembly detailed information is not presented.

Exchange Assemblies

The folowing asemblies are exchange assemblies:

3 1/2-inch Flexible Disc Drive	-- 09114-69511
Controller/Power Supply Assembly	-- 09114-69510

Non-Exchange Assemblies

The following assemblies are not exchangable:

Internal HP-IL Cable	-- 09114-61611
Drive Cable, RBN	-- 09114-61612
Battery Cable	-- 09114-61613
On/Off Cable	-- 09114 61614
Internal Sony PWR Cable	-- 09114-61610
Battery Pack	-- 88014A
Recharger	-- 82059-60003

Field Service Inventory

The following list of assemblies and parts is recommended for your Field Service Inventory (FSI)

Internal HP-IL Cable	-- 09114-61611
Sony Drive Cable	-- 09114-61612
Battery Cable	-- 09114-61613
On/Off Cable	-- 09114 61614
Internal drive PWR Cable	-- 09114-61610
Battery Pack	-- 88014
Recharger	-- 82059-60003
Controller/Power PC Board	-- 09114-69510
3 1/2-inch Flexibla Drive	-- 09114-69511

Controller Electronics and Power Supply Assembly

Figure 4-1 represents the power supply and controller electronics of the printed circuit assembly. Along with key components, the test points are also labeled.

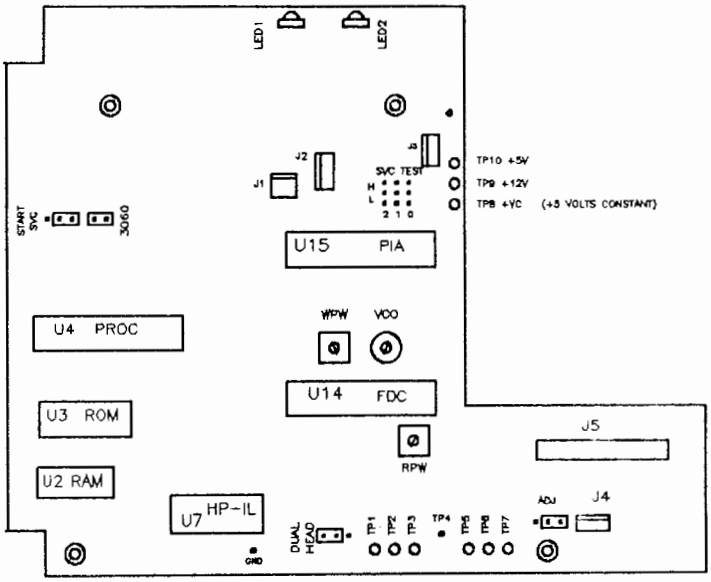

ALL JUMPERS ARE SHOWN IN NORMAL OPERATING POSITION.

FIGURE 4-1

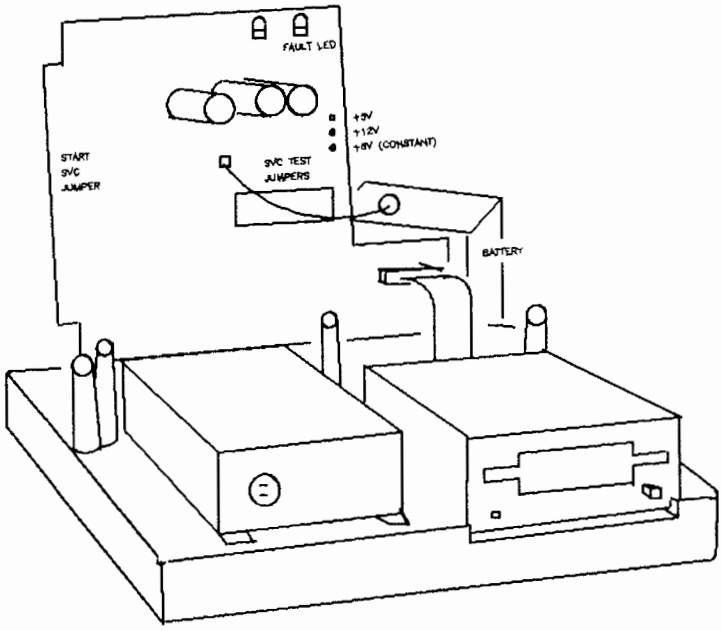

FIGURE 4-2

Selftest

To implement the selftests available on the HP9114A controller, the following setup procedure should be followed.

Setup:

-remove the battery pack and set it on its rear pannel adjacent to the unit as shown in figure 4-2

-remove the 4 recessed Torx-head screws from the bottom of the unit.

-remove the top cover by pulling the cover straight up.

-remove the 4 Torx-head screws attaching the PCA to the bottom chassis

-Carefully lift the front edge of the PCA and remove the battery connector (J1)

-Position the PCA as shown in figure 4-2

-Connect on end of the supplied cable, (P/N 09114-61613), to the battery and the other end to J1 on the PCA.

The selftest diagnostics are selected as follows.

1. Turn off the drive, and install a blank, formatted disc.

2. Configure the SVC TEST jumpers for the desired test. See figure 4-3

3. Turn on the drive, and set the START SVC jumper to the test enable position.

NOTE

The 9114 goes into STANDBY mode 30 seconds after power-up, or the last HP-IL command. STANDBY mode enables only the RAM, the HP-IL chip, and the power-enable flip-flop.

To enable a test, the START SVC jumper must be installed within 30 seconds after the drive has been turned on. Repeat this procedure for each test. Allow the power-on selftest to complete before installing the START SVC jumper.

4. Reset the jumpers after testing.

There is no method of looping on a test.

The results of a successful test are displayed by the FAULT-LED blinking. A failure causes the LED to stay on. Results are displayed for five seconds followed by a complete power-up sequence.

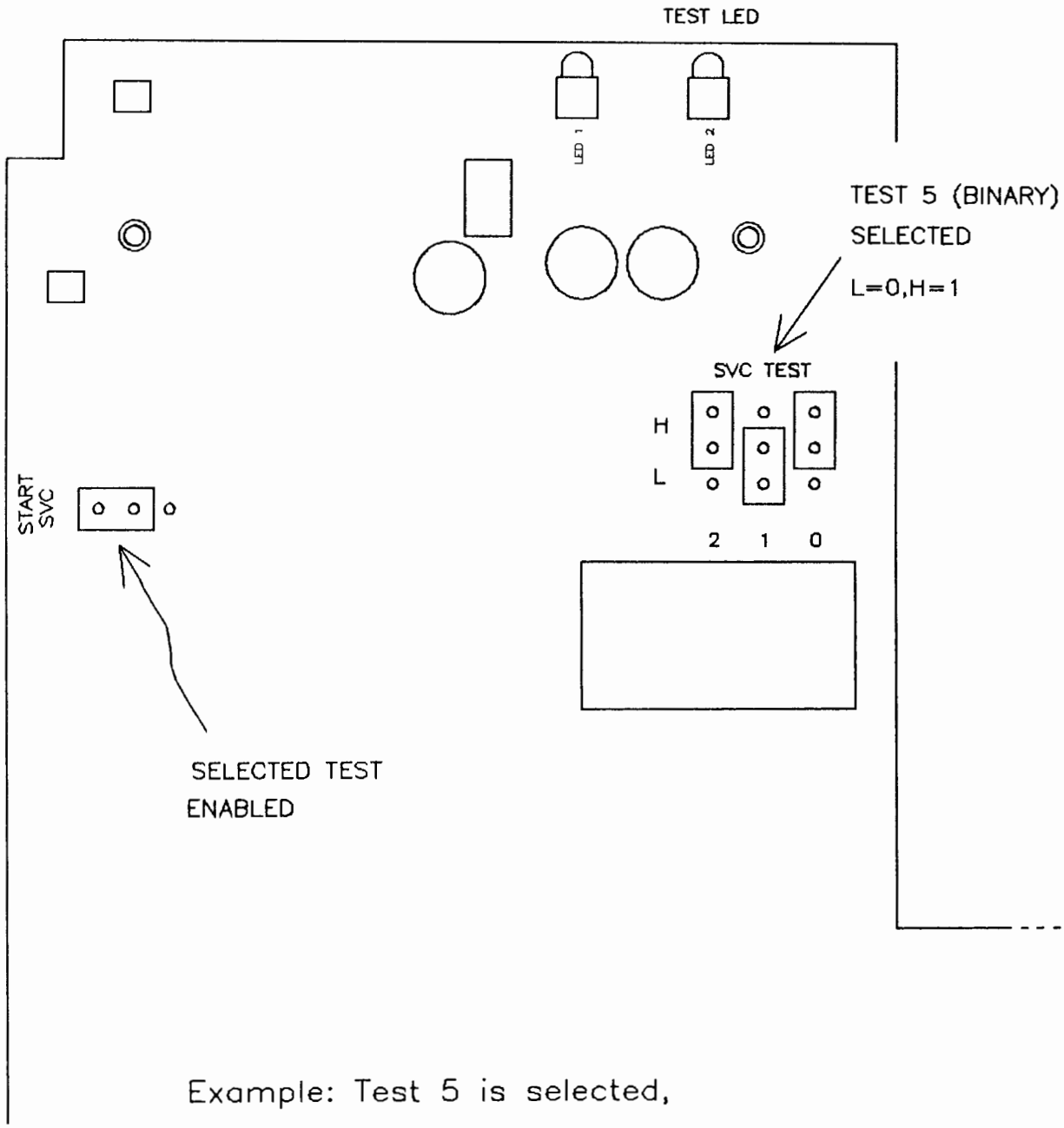

Example: Test 5 is selected,
test is enabled.

Figure 4-3 SVC Test Jumpers

Available Test

Computer Museum

0 NO TEST CURRENTLY

1 RAM/ROM/FDC/PIA TEST: This test tests all of the preceding chips in the order indicated. The RAM is tested, the the LED is blinked twice to indicate it passed; the ROM is tested, then the LED is blinked three times to indicate it passed, etc.

2 HP-IL CHIP TEST: This is an interface loop-back test which tests the ability of the HP-IL chip to send and receive data. The supplied HP-IL cable must be connected between the input and output of the HP-IL port.

3 WRITE/READ TEST: A worst case pattern is written on the disc. The data is then read and compared to the originally written data.

CAUTION

A blank disc should be inserted during this test, as the data and format will be destroyed by the testing procedure.

4 VERIFY TEST: All sectors in the data area of the disc are checked for CRC errors.

5 SEEK TEST: The track zero detector is checked while the head is moved on and off of track zero.

6 MOTOR SPEED: The period of the index pulse is measured to check motor speed accuracy.

7 FORMAT: The disc is formatted. Data patterns are written and verified.

CAUTION

A blank disc should be inserted during this test, as the data and format will be destroyed by the testing procedure.

NOTE

A disc must be in the drive to perform test 3 through 7. Ensure that the disc is not write protected and that it is an initialized scratch disc.

Additional Hints

The power on selftest can be used to isolate the PCA or the drive in the following manner:

-With no disc installed, power up the unit. If the selftest fails (the fault LED stays on) then it would clearly point to the controller PCA as the cause of the failure.

-If the preceding test passed, power down the unit and insert an initialized scratch disc and power up the unit. The selftest will now attempt to do a write and then a read from the disc. If it fails at this point, you should attempt to use another new initialized scratch disc and repeat the test. If it still fails then use the available selftest described in the beginning of this chapter to further isolate the problem.

NOTE

If you are experiencing **DISC COMPATIBILITY** problems, procede to the ADJUSTMENTS section that follows only after you have verified that a known good formatted disc presents the same symptoms. This type of problem may mean that the PLL has drifted out of tolerance.

Adjustments

The Phase Lock Loop (PLL), Read Pulse Width (RPW), and Write Pulse Width (WPW) adjustments are performed as follows. The PLL adjustment should be performed when the unit exibits read/verify errors or fails the VERIFY test (TEST 4). The RPW and WPW adjustments are not recommended as they rarely drift, and are not critical. The RPW and WPW procedures are included for troubleshooting purposes and for the case of unintentional adjustment only.

PLL Adjustment

The PLL, as well as the RPW and WPW adjustments require that the STANDBY mode be defeated to allow the FDC chip to warm up and stay on during adjustment. Perform the following procedures at an ambient temperature of 25° C (77° F) in the order specified.

Use figure 4-1 for locating test points.

1. Power on the unit, and allow the power-on selftest to finish.

2. Immediately install a jumper-lead from pin 2 of U7 to the ground test-point. This disables the STANDBY mode.

3. Set the ADJ jumper to the ADJ position. This enables the FDC adjust mode.

4. After 2 minutes warm up, attatch the frequency counter test leads to the VCO test-point. The frequency should be 500 KHz +-5%. If adjustment is necessary, adjust the variable capacitor C15 for a frequency of 500 KHz +-.2% (+-1 KHz).

5. Return the ADJ jumper to the original position, and remove the .ground lead.

6. Verify disc operation.

RPW and WPW adjustment

1. Perform the preceding power-on, jumper, and warm up procedure (steps 1 through 3).

2. Attatch the oscilloscope test lead to the **RPW** test point.

3. Observe the waveform pulse-width (see figure 4-4). The pulse width should be 250 ns. +-10%.

4. Attatch the test lead to the **WPW** test point and observe the pulse width. The width should be 125 ns. +-10%.

5. The **RPW** and **WPW** adjustments are rarely necessary. Perform only if the adjustments were inadvertently altered.

6. Return the **ADJ** jumper to the original position, and remove the ground lead.

7. Verify disc operation.

READ AND WRITE PULSE WIDTH

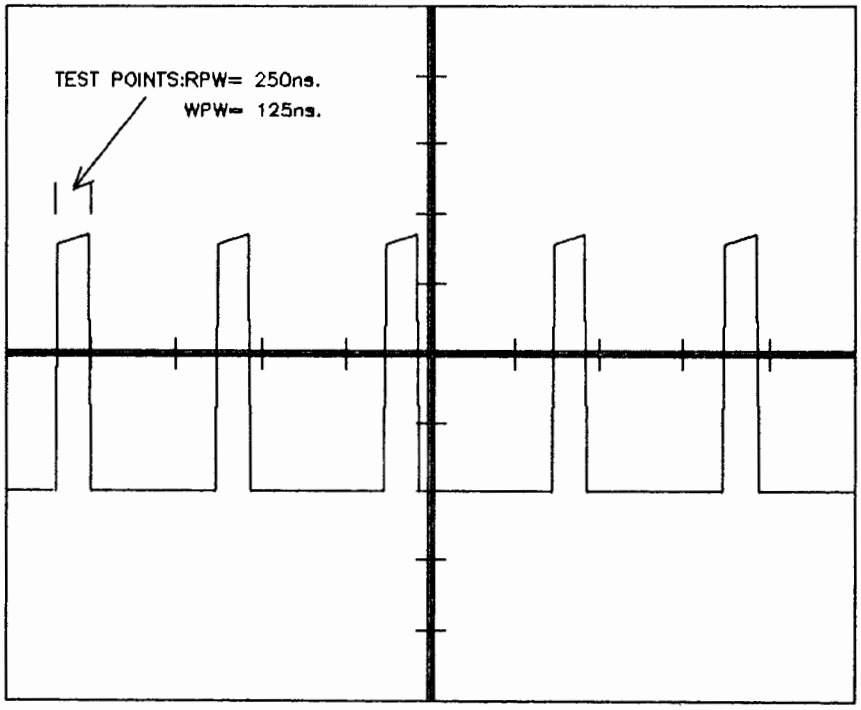

SCOPE SETTINGS: 1V/div., .5usec./div.

Figure 4-4

Assembly Access

CHAPTER 5

Introduction

This chapter provides information for disassembly of the 9114A disc memory. An exploded view is also provided with instructions. The exploded view references part numbers that are listed in the replaceable parts section.

The following tools are required for disassembly and reassembly of the disc memory.

Torx Drivers T7 and T9

The T9 driver must be capable of reaching to the bottom of a hole which is approximately 2.3 inches deep and 0.3 inches in diameter.

Needlenose pliers

Top Cover Removal

To access the internal assemblies, the top cover must first be removed. Peform the following steps to remove the top cover.

- Remove the 4 recessed Torx-head screws from the bottom.
- Remove the top cover by pulling the cover straight up.

Printed Circuit Assembly Removal

To remove the printed circuit assembly complete the following steps.

- Remove the 4 Torx-head screws attatching the PC assembly to the chassis.
- Carefully lift the the front edge of the assembly and remove the 5 cable connectors.
- To assemble, reverse the above process.

CAUTION

CAUTION MUST BE USED WHEN REINSTALLING THE CONNECTORS TO THE PC ASSEMBLY. IT IS POSSIBLE TO REVERSE AND MISSALIGN THE CONNECTOR PINS WHEN REASSEMBLING.

Drive Removal

The drive assembly is attatched to an aluminum mounting plate, which is attatched to the bottom cover. To remove the drive assembly, disconnect the 3 cables connected to the drive assembly, remove the 4 mounting plate screws, and remove the drive and mounting plate as one unit. Remove the 4 screws attatching the drive to the mounting plate.

9114 PARTS LISTS

LEVEL	REFERENCE DESIGNATOR	PART NUMBER	CD	DESCRIPTION
1	A1	09114-66510		CTLR/PWR PC BD
.2	C14,16.108,112	0160-4571	8	C-F .1UF + 80
.2	C119	0160-4574	1	C-F 1000PF 10%
.2	C10	0160-4800	6	C-F 130PF 5%
.2	C101	0160-4801	7	C-F 100PF 5%
.2	C116,117	0160-4808	4	C-F 470PF 5%
.2	C19,20	0160-4810	8	C-F 330PF 5%
.2	C1-4,6-9,11-13,17 C102,107,111,118	0160-4832	4	C-F .01UF 10%
.2	C105	0160-4833	5	C-F .022UF 10%
.2	C5	0160-5349	0	C-F 200PF 5%
.2	C103,104	0180-0291	3	C-F 1UF 35V 10%
.2	C109,113	0180-0374	3	C-F 10UF 20VDC
.2	C110,114,115	0180-0693	9	C-F 1000MF 25V
.2	3 GNDS	0360-0124	3	STUD-TERM
.2	R101,127	0683-1015	7	R-F 100 OHM .05
.2	R7,8,9,15	0683-1025	9	R-F 1K 5% .25W
.2	R2,5,12	0683-1035	1	R-F 10K .05 1/4W
.2	R3,4,13,14	0683-2025	1	R-F 2.0K 5%
.2	R115,128	0683-3315	4	R-F 3300HM .05
.2	R1,6	0683-5105	4	R-F 51 OHM 5%
.2	R138	0683-8215	3	R-F 820 OHM .05
.2	R131	0698-3161	9	R-F 38.3K .01
.2	R109	0698-3268	7	R-F 11.5K 1%
.2	R102	0698-3279	0	R-F 4.99K OHM
.2	R17,18	0698-3446	3	R-F383 OHM .125
.2	R130	0698-3499	6	R-F 40.2K 1%
.2	R114,122	0698-4202	1	R-F 8.87K 1%
.2	R129,140	0698-4205	4	R-F21K 1% .125W
.2	R104	0698-4435	2	R-F 2.49K 1%
.2	R106,139	0698-4481	8	R-F 16.5K 1%
.2	R141	0698-4488	5	R-F 26.7K .01
.2	R119	0698-4516	0	R-F 113K 1%.125W
.2	R123	0757-0283	6	R-F 2.0K 1%
.2	R126	0757-0289	2	R-F 13.3K 1%
.2	R105,108,112,116, R118,124,125,132, R133,135	0757-0442	9	R-F 10.0K 1/8W

.2	R19,20	0757-0446	3	R-F 15K .125W
.2	R121	0757-0462	3	R-F 75K 1% .125W
.2	R103,111,117,120 R134,136,137	0757-0465	6	R-F 100K .01
.2	R107	0757-0469	0	R-F 150K1%.125W
.2	R110,113	0757-0477	0	R-F 332K 1%.125W
.2	U3	09114-15514	8	SONY CTRL EPROM
.2	U4,14	1200-0654	7	SKT-IC 40-CIBT
.2	U3	1200-0861	8	SKT-IC 28-CONT
.2	J3,4	1251-7018	8	CN4.1 SQ POST
.2	J5	1251-8682	4	CN 26.1 SQ POST
.2	SVC,ADJ,DUAL HD	1252-0058	4	CN3.1 SQ POST
.2	SVC,ADJ,3060	1258-0141	8	JUMPER-REM
.2	RP1	1810-0190	9	NTWK-R13X2.2KDIP
.2	RP2	1810-0206	8	NETW-R 10K SIP
.2	U5	1813-0194	9	XTAL-CLK-OSC
.2	U2	1818-1611	7	IC-STATIC RAM
.2	U13	1820-0175	1	TTL 7405
.2	U6,12	1820-1112	8	IC SN74LS74AN
.2	U10	1820-1197	9	IC SN74LS00N
.2	U9	1820-1208	3	IC-74LS32
.2	U8	1820-1427	8	IC-SN74LS156
.2	U11	1820-1433	6	IC SN74LS164N
.2	U1	1820-1445	0	IC SN74LS375N
.2	U4	1820-2624	9	IC-68B09
.2	U15	1820-2983	3	IC 68B21
.2	U14	1820-3659	2	WD-2793-02 FDC
.2	U104,108	1826-0174	2	IC-QUAD MC3302
.2	U102,106,107	1826-0180	0	IC NE555V
.2	U101	1826-0346	0	IC-LM358
.2	U105	1826-0544	0	IC MC1403U
.2	U103	1826-0904	6	IC LM330T-5.0
.2	Q101,108	1853-0363	8	XSTR PNP SI
.2	Q102,103,104,107	1854-0215	1	XSTR-2N3904
.2	Q105	1855-0548	5	XSTR-MOSFET 12A
.2	CR1,CR102	1901-0050	3	DIO SWITCHING
.2	CR101	1901-0347	1	DIO-SCHOTTKY SM
.2	CR103	1901-0782	8	DIO-PWR RECT
.2	CR4,5	1902-0953	7	DIO-ZNR 6.2V
.2	CR2,3	1902-0970	8	DIO-ZNR 33V 5%
.2	U7	1LB3-0003	8	HPIL CHIP 1LB3
.2	R10,11	2100-3210	6	RES-TRMR 10K 1%
.2	L1	9100-1631	8	COIL-CHOKE 56UH
.2	L102	9100-3551	5	IDCTR 1UH 5%
.2	U17	9100-4226	3	XFMR-PLS
.2	L101	9140-0890	3	IDCTR-10UH 6A
.2	J2	T-30126	1	HDR 3 PIN ON/OFF
.2	C15	T-30127	2	C-V 9-80PF VAC
.2	LED1,LED2	T-30131	8	LED,VIS-RED/BRKT
.2	J1	T-30165	8	HDR 2 PIN

Computer Museum

1	0403-0427	1	BUMPER FOOT
1	0515-1079	8	SCREW-MACHINE
1	0624-0615	7	SCR #2-28X.562
1	0624-0616	8	SCR #4-20X.625
1	0624-0621	5	SCR #4-20X.375
1	09114-88800	2	COVER ASSEMBLY
1	09114-44401	3	BASE
1	09114-67511	3	SONY FLPY DBL SD
1	09114-61610	8	DC POWER CABLE
1	82059-60003	6	BASE-RCHGR-TC-US
.2	82066-60002	4	BASE-RCHGR-TC-EU
.2	82067-60003	6	BASE-RCHGR-TC-UK
.2	82067-60004	7	BASE-RCHGR-TC-SA
.2	82068-60002	6	BASE-RCHGR-TC-AU
1	09114-67197	2	INVENT PARTS PKG
.2	09114-61611	8	CABLE, INTL-HPIL
.2	09114-61612	9	CABLE, SONY DR RBN
.2	09114-61613	0	CABLE, BRTY
.2	09114-61614	1	CABLE, ON/OFF
.2	09114-69510		CTL/PWR PC BD
.2	88014A		BATTERY PACK
.2	09114-61610		CABLE-SONY PWR
.2	09114-69511		SONY FLPY DBL SD
1	09114-83400	4	DEAL SUPPT KIT
1	0624-0616	8	SCR #4-20X.625
1	0624-0621	5	SCR#4-20X.375
.2	09114-61611	8	CABLE, INTL-HPIL
.2	09114-61612	9	CABLE, SONY DR RBN
.2	09114-61613	0	CABLE, BRTY
.2	09114-61614	1	CABLE, ON/OFF
.2	09114-67510		CTL/PWR PC BD
1	09114-67511		DRIVE ASSEMBLY

GENERAL INFORMATION

CHAPTER 1

Computer Museum

Introduction

The HP 9122D/S Disc Memories (Figure 1-1) are random access data storage devices. The 9122S contains a single 3 1/2-inch double-sided drive providing 710 Kbytes of storage capacity. The 9122D contains two 3 1/2-inch double-sided disc drives providing a total storage capacity of 1420 Kbytes (capacity based on 512 bytes per sector)

The 9122D/S drives have been designed using the SUBSET 80 command set. Refer to APPENDIX B of this manual for specific commands implemented.

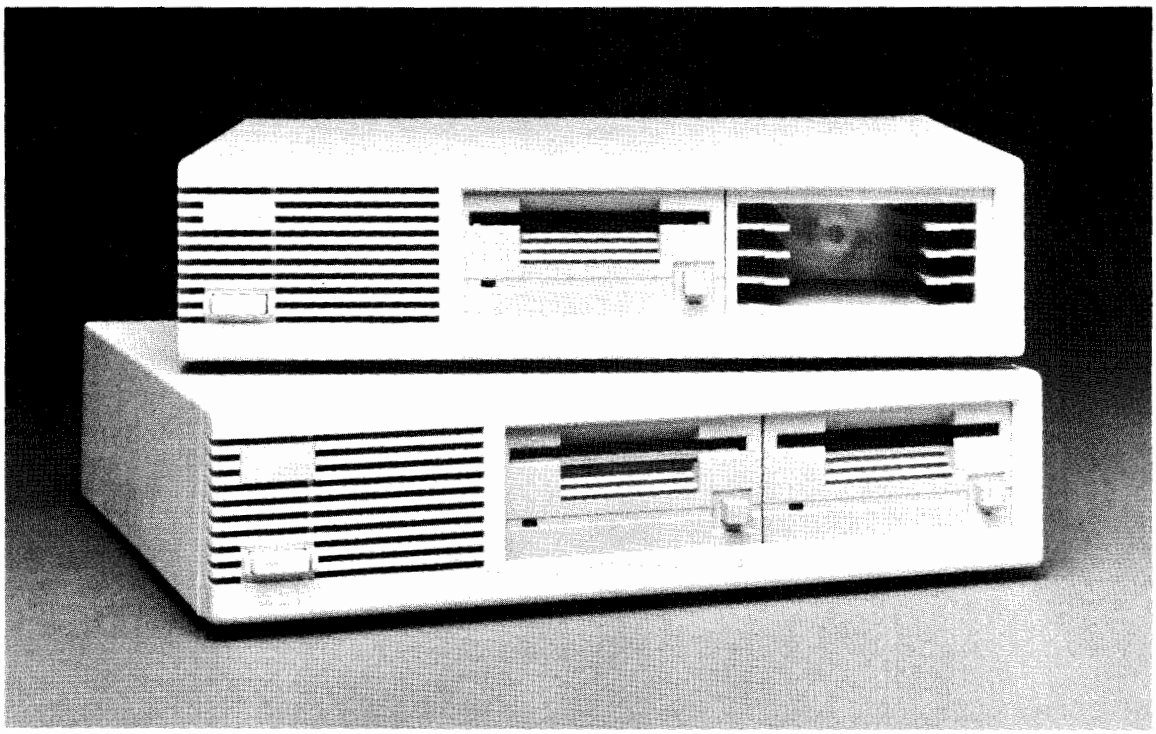

Figure 1-1. HP 9122D/S Flexible Disc Memory

Technical Specifications

	HP 9122S	HP 9122D
Number of drives	1	2
Net Weight	3.6kg (8.5 lbs)	4.5 kg (10 lbs)
Height	76 mm (2.99 in.)	
Depth	285 mm (11.2 in.)	
Width	325 mm (12.8 in.)	

Printed 6/20/84 **Part Number 5957-6559**

Interface	HP-IB
HP Double-Density Format	
Encoding	MFM
Rotational Speed	600 RPM
Bit Density @ 600 RPM	Track 79 (Inside track) 8717 BPI
Track Density	135 tracks per inch
Tracks per Surface	80
Surfaces used per disc	2
Capacity	
Bytes/Sector	512 (256 for Series 200)
Sectors/Track	9
Tracks	80
Bytes/Drive (Formatted)	709.632 Kbytes (154 tracks used for data) (630 Kbytes for Series 200)
Access Time	
Track-to-Track Seek	15 ms/track, plus 42 ms settling
Maximum Track-to-Track Seek (80 tracks)	1242 ms
Average Track-to-Track	447 ms
Maximum Rotational Latency	100 ms
Average Rotational Latency	50 ms
Spindle Motor on time	400 ms
Maximum Data Access Time (Seek plus Latency plus Motor on time)	1.742 s
Average Data Access Time	497 ms

Data Transfer Rates

Interleave	Avg. Transfer Rate (bytes/second)
1	4.4K
2	17.6K
3	12.4K
4	9.5K
5	7.8K
6	6.6K
7	5.6K
8	5.0K
9	4.3K
10	3.9K
11	3.5K
12	3.2K
13	3.0K
14	2.8K
15	2.6K

Maximum burst transfer rate of the 9122D/S is 100 Kbytes/s. This is the capability of the 9122D/S. The above transfer rates are on a series 200 computer. If you are using another computer, the transfer rates may vary.

NOTE

All of HP's computers spare 4 complete tracks. This reduces the usable user space to 512*9*154 (bytes/sector times sector/track times unspared tracks). This total equals 709.632 Kbytes. The remaining two tracks are for system use

Power Requirements

86-125 volts or 195-250 volts @ 67 watts RMS (94 voltamps)
50-60 Hertz
Fuse 1A, 250 for 115V setting
.5A, 250 for 230V setting

Environmental Specs

Operating Limits	
Temperature	10 to 40°C (50 to 104°F)
Humidity	20 to 80% with maximum wet bulb temperature (non-condensing) not to exceed 29°C (85°F).
Altitude	0 to 4572 m (0 to 15,000 ft)
Non-operating Limits (Storage and Transit)	
Temperature	-40 to 60°C (-40 to 140°F)
Altitude	-304 to 15240 m (-1000 to 50,000 ft)

NOTE

The flexible disc in the HP 9122D/S Disc Memory is designed for operation in a typical office environment. Use of the equipment in an environment containing dirt, dust, or corrosive substances will cause the flexible disc drives and medium life to be drastically reduced.

Equipment Supplied

The following equipment is supplied with each HP 9122D/S disc memory.

Description	Quantity	HP Part Number
AC Power Cord	1	Dependent on location
Operator's Manual	1	09122-90000

A package of ten discs has been set up as a product. This product is orderable using the 92192A product number.

Unpacking Your HP 9122D/S Disc Memory

Your disc memory was carefully inspected before shipment. Remove the unit from the shipping carton and carefully inspect the unit for any physical damage that may have occurred during shipment. If you find any damage, you should immediately notify your dealer and file a claim with any carriers involved.

CAUTION

The DISC MEMORY is a precision instrument. Mechanical shock can misalign the READ/WRITE HEAD, resulting in READ ERRORS and/or DAMAGED DISCS whether the disc is operating or not.

When moving the disc unit, care should be taken to prevent excessive shock. Install the cardboard disc supplied with the product before moving it to another location.

Cleaning the Case

The disc drive case is made from a white plastic material and is not painted. The rear panel has a durable, non-toxic label. In the event of damage to the case finish, consult your HP Sales Office for touchup paints.

CAUTION

Chemical spray-on cleaners used for appliances and other household and industrial applications may damage the case finish. Do not use detergents that contain ammonia, benzenes, chlorides, or abrasives.

Before cleaning the case, disconnect the power cord and HP-IB cables. Make sure that any disc is removed from the drives. Dampen a clean, soft, lint-free cloth in a solution of clean water and mild soap. Wipe the soiled areas of the case, making sure that no cleaning solution gets inside the case. For cleaning more heavily soiled areas, a solution of 80% clean water and 20% isopropyl alcohol may be used. Dry the areas that had cleaning solution applied with another clean, soft, lint-free cloth. A non-abrasive eraser may be used to remove pen and pencil marks.

Installation

CHAPTER 2

Introduction

Refer to Section II, Chapter 2, of this manual for Installation information.

Disc Compatibility Between the HP 9121D/S and HP 9122D/S

Table 1 details the recommended usage of single-sided and double-sided discs. Words used in the table are defined as follows:

* "Exchange only" means that the medium should be used only for copying data and programs and should not be used on a daily basis.

* "OK" means that the medium may be used on a daily basis.

* "NO" means that the medium cannot be used.

TABLE 1

	HP 9121	HP 9122 *
Single-sided HP medium	OK	exchange only
Double-sided HP medium in single-sided format	exchange only	OK
Double-sided HP medium in double-sided format	NO	OK
HP software--single-sided or double-sided medium **	OK	OK

*Use only discs with auto-shutters in the HP 9122.

**Software provided by Hewlett-Packard has been tailored for the computer/disc system on which the software will be used.

Controls and Indicators

Front Panel

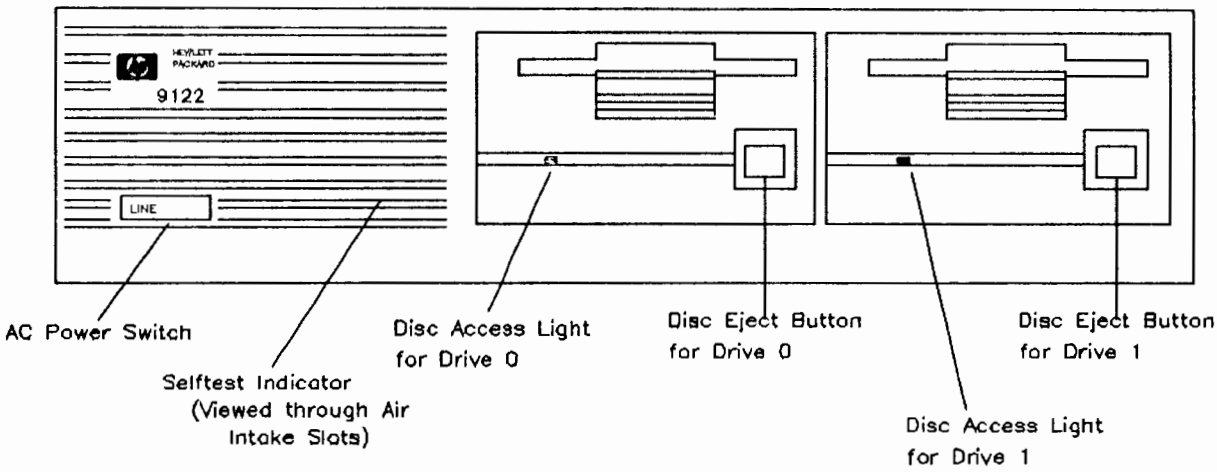

Rear Panel

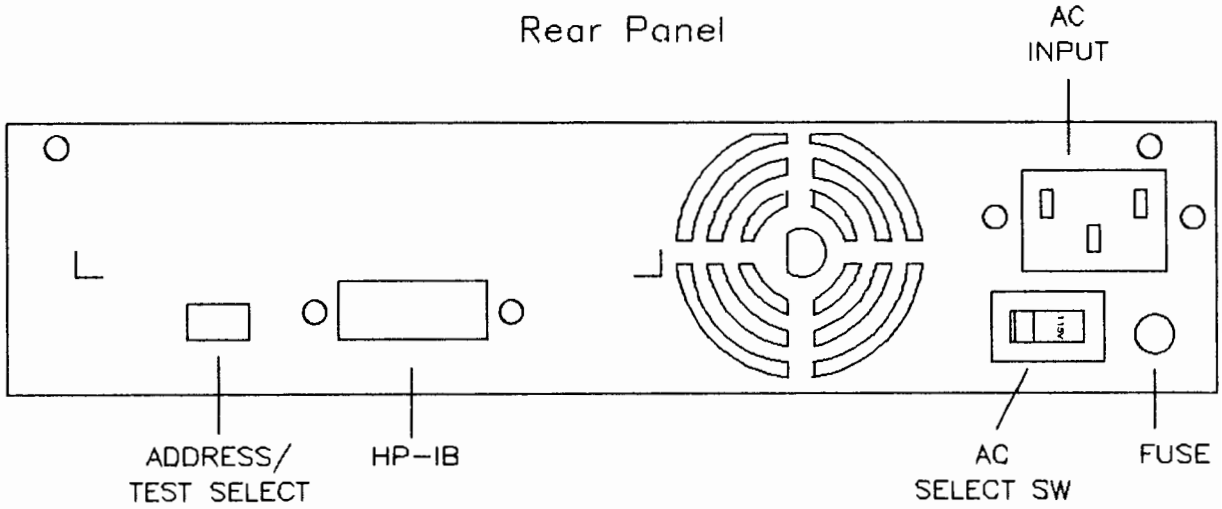

Media Monitor

Through a feature called Media Monitor, the disc drive automatically monitors the cumulative use of each individual disc. When the usage of a disc is approaching a level at which there is a risk of loss of data through normal disc wear, the disc access light on the front panel blinks and a clicking sound is heard. Commands will still be performed by the computer. However, after a command has been performed, the disc drive immediately resumes the warning indication.

When the Media Monitor warning occurs, immediately copy your disc. If you continue to use this disc, the disc drive will eventually automatically write protect the disc. After that time, you will only be able to read data from the disc or copy the disc.

Interface Information

CHAPTER 3

Introduction

Refer to Section II, Chapter 3, of this manual for interface information on the 9122D/S.

Computer Museum

Interface Information

CHAPTER 3

Introduction

Refer to Section II, Chapter 3, of this manual for interface information on the 9122D/S.

Troubleshooting

CHAPTER 4

Repair Philosophy

The 3 1/2-inch disc drive assembly is serviced on the exchange program.The assembly includes the drives and drive electronics board.

The selftest and alignment procedures are given to enable you to isolate problems and correct misalignment in the field.

Power supply information is presented in each tabbed section. Controller assembly detailed information is not presented.

Exchange Assemblies

PART NUMBER	DESCRIPTION
09122-69501	CONTROLLER BOARD
09114-69511	3 1/2 in. DRIVE

Non-Exchange Assemblies

PART NUMBER	DESCRIPTION
09121-68511	FAN ASSEMBLY
09121-61611	RIBBON CBL ASSY
09121-61612	DC PWR CBL
09122-68802	LINE FILTER ASSY
2110-0001	FUSE 1A 250 VOLT
2110-0012	FUSE 1/2A 250 VOLT

Field Service Inventory

PART NUMBER	DESCRIPTION
09122-69501	CONTROLLER BOARD
09114-69511	3 1/2 in. DRIVE
09121-68511	FAN ASSEMBLY
09121-61611	RIBBON CBL ASSY
09121-61612	DC PWR CBL

The items needed for the 9122D/S FSI in addition to the existing FSI for the 9121D/S will be the 09122-69501 controller board and the 09114-69511 3 1/2 in. disc drive.

Controller Electronics and Power Supply Assembly

Figure 4-1 represents the power supply and controller electronics of the printed circuit assembly. Along with key components, the test points are also labeled.

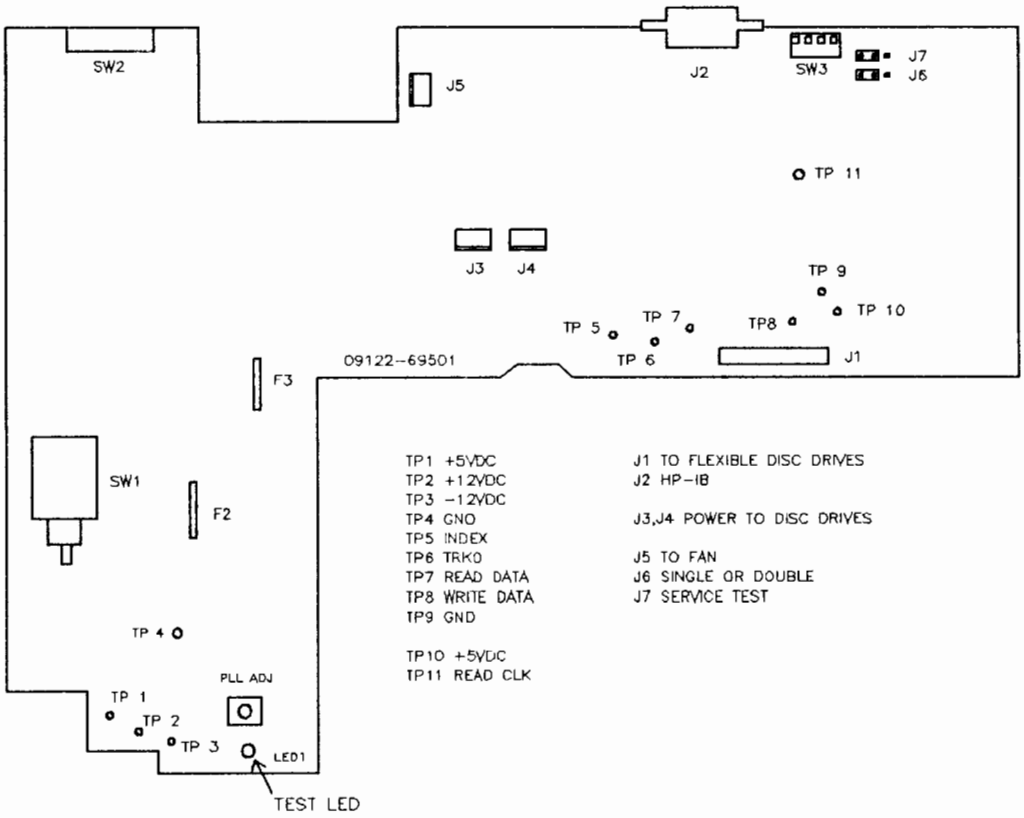

FIGURE 4-1

Selftest

The selftest diagnostic capability of the HP 9122D/S can be initiated in three ways: Power-on, service initiated, and I/O bus initiated. The HP 9122 power-on selftest tests the RAM, ROM, FDC and the HP-IB chips, as does the HP 9121 selftest. In addition, the HP 9122 performs a WRITE/READ, and seek test when formatted, unprotected discs are installed in the drives prior to powering the unit on.

The service diagnostic testing function allows selection and looping of any of the test choices in the following table.

To initiate a test, perform the following.

1. Apply power to the unit and allow the power-on selftest to complete.

2. Install formatted, unprotected discs if tests 4 through 14 are to be performed. (Note: Scratch discs should be used, as some tests destroy the data and format)

3. Set the HP-IB ADDRESS switch to the desired test number(see figure 4-3).

4. Short the TEST jumper pins J7, see figure 4-1, with the jumper to start the test; LEAVE SHORTED TO LOOP ON THE SELECTED TEST.

When a selftest is initiated, the HP 9122 leaves its normal peripheral mode and enters the diagnostic test mode. The LED blinks (to show that the LED works).

The results of a successful test are displayed by the FAULT-LED blinking. A failure causes the LED to stay on. Results are displayed for five seconds followed by a complete power-up sequence.

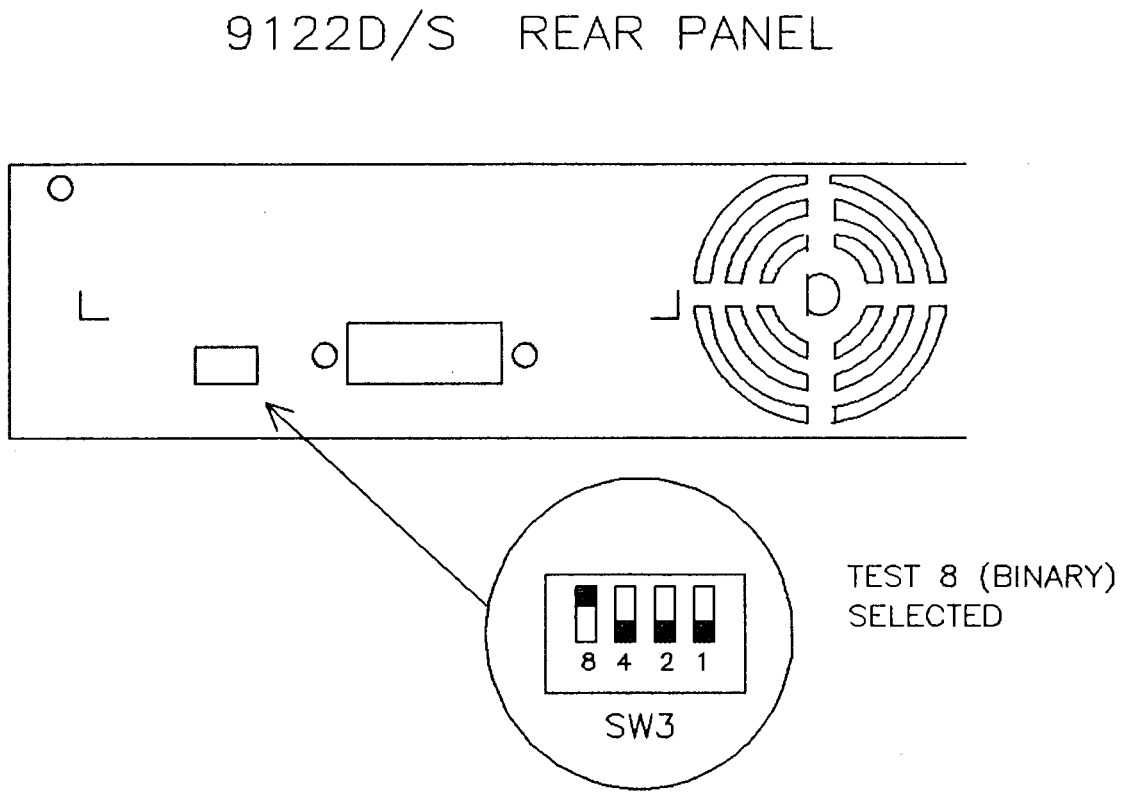

FIGURE 4-3

Available Test

0	RAM	all patterns are written in all locations of RAM
1	ROM	a checksum calculation is performed
2	HP-IB chip	two of the registers are written and their content verified.
3	FDC chip	two of the registers are written and their content verified.
4	Drive 0 Seek	commands are given to the FDC to move the head on and off of track 0. The track 0 indicator is checked to see that movement occurred.
5	Drive 1 seek	Same as above but on drive 1.
6	Motor 0 speed	the head is stepped to track 35 and loaded. The period of the index pulse is measured and compared against the specification. No test if no media in drive.
7	Motor 1 speed	Same as above but on drive 1.
8	Write/verify disc 0	write on every sector of the disc and verify the data written.
9	Write/verify disc 1	Same as above but on drive 1.
10	Verify disc 0	All sectors in the data area of the disc are checked for CRC errors.
11	Verify disc 1	Same as above but on drive 1.
12	Format disc 0	The disc is re-initialized with a 011 data pattern.
13	Format disc 1	Same as above but on drive 1.
14	PLL test	The free running frequency of the PLL is checked. The disc in drive 0 is used for the test, and its format is destroyed by the testing procedure.

NOTE

A disc must be in the drives to perform test 6 through 14. Ensure that the discs are not write protected and that they are initialized scratch discs.

Additional Hints

The power-on selftest can be used to isolate the PCA or the drive in the following manner:

-With no disc installed, apply power to the unit. If the selftest fails (the TEST LED stays on) the controller PCA is clearly the cause of the failure.

-If the preceding test passed, power down the unit and insert an initialized scratch disc and power up the unit. The selftest will now attempt to do a write and then a read from the disc. If it fails at this point, you should attempt to use another new initialized scratch disc and repeat the test. If it still fails then use the available selftest described in the beginning of this chapter to further isolate the problem.

NOTE

Install 2 disc for the HP 9122D and 1 disc for the HP 9122S.

- If you have one drive which continually fails the selftest, you can swap the LOGICAL position of the drive by doing the following:

1. Using figure 4-4 as reference, take the disc drive select switch of PHYSICAL drive 0 and set it to position 3.

2. Set PHYSICAL drive 1 disc drive select switch to position 2. Steps 1 and 2 exchange disc drive addresses.

Power on the unit, with discs installed in each drive, and see if the problem follows the drive. If it does, then the controller PCA or the drive cable is the problem.

If the problem does not follow the drive, then the drive you were originally having the problem with is at fault.

Return the drive select switch of each drive to its orginal position (refer to figure 4-4 for orginal positions).

NOTE

If you are experiencing **DISC COMPATIBILITY** problems, proceed to the ADJUSTMENTS section that follows only after you have verified that a known good formatted disc presents the same symptoms. This type of problem may mean that the PLL has drifted out of tolerance.

Adjustments

PLL Adjustment

The Phase LockLoop (PLL) adjustment is performed as follows. The PLL adjustment should be performed when the unit exibits read/verify errors or fails the PLL test (TEST 14).

Use figure 4-1 for locating test points.

1. Power on the unit, and allow the power-on selftest to finish.

2. After 2 minutes warm up, attatch the frequency counter test leads to the VCO test-point (TP11). The frequency should be 500 KHz +-5%. If adjustment is necessary, adjust the variable resistor R11 for a frequency of 500 KHz +-.2% (+-1 KHz).

3. Verify disc operation.

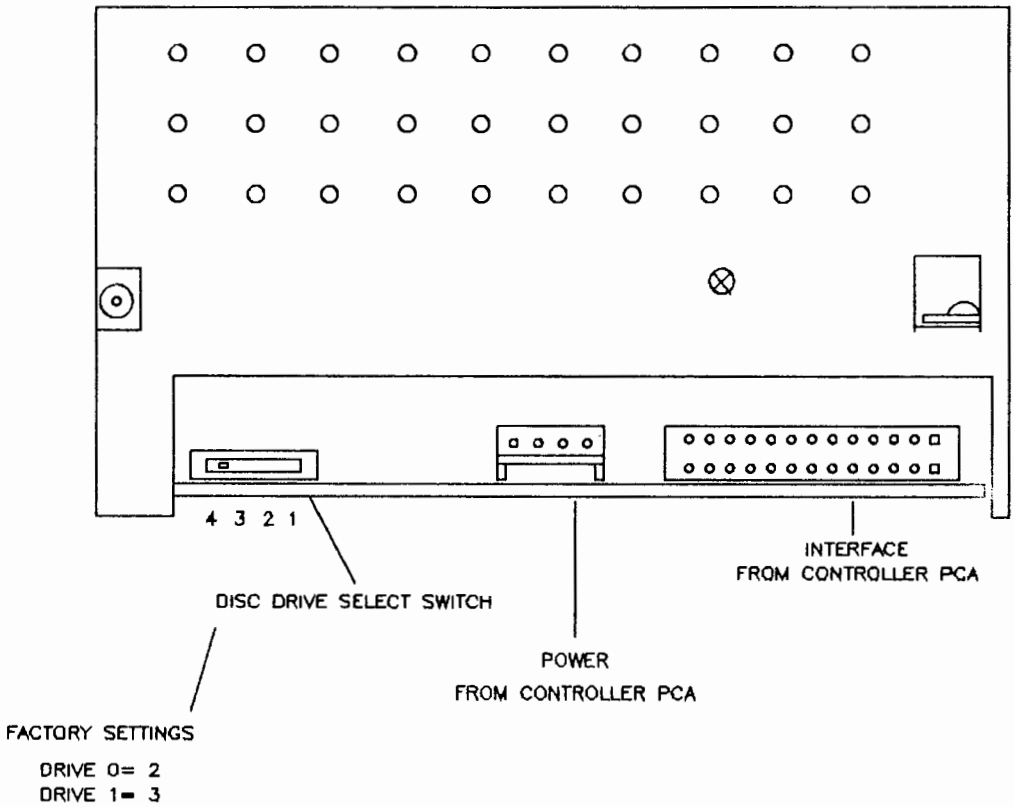

FIGURE 4-4

Assembly Access

CHAPTER 5

Introduction

Refer to Section II, Chapter 5, of this manual for Assembly Access information.

The following is additional information which pertains to the 9122D/S and the 9121D/S disc drives.

To remove the top cover perform the following steps. Remove the AC power cord, then remove the two cover securing screws on the rear of the unit. Depress the front panel power switch so that the cover will clear the button. Tilt the rear of the cover upwards, and carefully remove the cover in a foreward direction. Assembly is performed in the reverse order, while depressing the power switch button through the front panel hole.

9122D/S PARTS LIST

LEVEL	REFERENCE DESIGNATOR	PART NUMBER	DESCRIPTION
1	A1	09122-69501	CTLR-PWR BD
.2	C11,12	0160-3622	C-F .1UF 100V
.2	C19	0160-4574	C-F 1000PF 10%
.2	C10	0160-4805	C-F 47PF 5% 100V
.2	C17,22,23	0160-4830	C-F 2200PF 10%
.2	TEMP.	0160-4831	C-F 4700PF 10%
.2	C31-46	0160-4832	C-F .01UF 10%
.2	C4,5,8	0160-4835	C-F .1UF 10% 50V
.2	C25,26	0160-5098	C-F .22UF 10%
.2	C9,18,27-30	0160-5349	C-F 200PF 5%
.2	C24	0180-0210	C-F 3.3UF 15V
.2	C1,20,21	0180-0291	C-F 1UF 35V 10%
.2	C2,3,15,16	0180-0692	C-F 220UF 35V AL
.2	C6	0180-3007	C-F .015F 25V AL
.2	C7	0180-3260	C-F 6800UF 50V
.2	C13,14	0180-3390	C-F 33MF 100V
.2		0340-0122	INSUL-FLG-BSHG
.2	BOTTOM	0340-0583	INSUL-XSTR TO-3
.2	TEST PTS	0360-0124	STUD-TERM
.2	J2	0360-2035	CONN-SGL CONT
.2	HEATSINK NUT	0590-0305	NUT-HEX 6-32
.2	R1,39	0683-1015	R-F 100 OHM .05

.2	R4,26,37,38	0683-1025	R-F 1K 5% .25W
.2	R40,41,46		
.2	R30	0683-1045	R-F 100K .05
.2	R23,24	0683-1205	R-F 12 5% .25W
.2	R32,33	0683-1245	R-F 120K .05
.2	R36	0683-1535	R-F 15K 5% .25W
.2	R7	0683-5655	R-F 5.6M .05
.2	R25	0683-6815	R-F 680 OHM.25W
.2	R35	0683-8215	R-F 820 OHM .05
.2	R5,27	0698-0082	R-F 464 OHM 1%
.2	R3	0698-3132	R-F 261 OHM .01
.2	R9,22	0698-3154	R-F 4.22K 1%
.2	R21,45	0698-3442	R-F 237 OHM 1%
.2	R14,16,17,18	0698-3445	R-F 348 OHM 1%
.2	R15,19,	0757-0280	R-F 1K 1% .125W
.2	R28	0757-0411	R-F 332 OHM 1%
.2	R2,6,8	0757-0417	R-F 562 OHM 1%
.2	R12,13,20,29	0757-0442	R-F 10.0K 1/8W
	R31,34,42,43		
	R44		
.2		09121-00611	SHIELD-TRANS
.2	T1	09121-82500	TRANSFORMER
.2	T1	09121-82501	XFMR SUPPORT
.2	U40	09122-15511	IC-SONY DSCTL E.
.3		1818-3076	IC D27128
.2	ROM SOCKET	1200-0861	SKT-IC 28-CONT
.2		1205-0500	HEATSINK
.2	PLSTC GASKET	1205-0503	XSTR MOUNT T03
.2	J1	1251-5153	CN SGL-CONT TAB
.2	J5	1251-6429	CN3.1 SQ POST
.2	J3,J4	1251-7018	CN4.1 SQ POST
.2	HP-IB-P2	1251-7651	CN24 M AMP CHAMP
.2		1251-8248	CN26.1 SQ POST
.2	J6.7.8	1252-0058	CN3.1 SQ POST
.2		1258-0141	JUMPER-REM
.2	RP1,RP2,RP3	1810-0204	NTWK-R 7X1K SIP
.2	MOTOROLA	1813-0194	XTAL-CLK-OSC
.2	FOX ELEC!		
.2	U41	1818-1611	IC-STATIC RAM
.2	U7,19,42	1820-0471	IC-SN7406N
.2	U16,27	1820-1112	IC SN74LS74AN
.2	U15,24,32	1820-1197	IC SN74LS00N
.2	U10	1820-1201	IC-SN74LS08N
.2	U2	1820-1202	IC-74LS10N
.2	U28	1820-1216	IC-SN74LS138
.2	U31	1820-1300	IC SN74LS195N
.2	U17,30	1820-1416	IC SN74LS14N
.2	U20,23	1820-1433	IC SN74LS164N
.2	U35	1820-2024	IC-SN74LS244
.2	U36	1820-2046	IC SN74LS353N
.2	U18,33	1820-2096	IC SN74LS393N
.2	U25	1820-2549	IC-8291AP
.2	U39	1820-2624	IC-68B09
.2	U21,U29	1820-2684	IC-74F00 N

.2	U22	1820-2686	IC-74F08 PC
.2	U38	1820-3006	IC-MB8876A CTLR
.2	U37	1820-3318	IC SN74ALS273N
.2	U4,6	1821-0001	XSTR-ARRAYCA3046
.2	U1	1826-0210	IC-LM361
.2	U8	1826-0346	IC-LM358
.2	U14	1826-0412	LM 393 V.COMPAR
.2	U9	1826-0555	IC-LM340LAZ-5
.2	U11,12	1854-0611	XSTR-2N6055 NPN
.2	U3,5	1858-0058	XSTR ARY MPQ3906
.2	U13	1884-0074	IC-2N5060
.2	CR1,3	1901-0050	DIO SWITCHING
.2	CR4	1901-0518	DIO- SM-SIG-S
.2	CR5-12	1901-1135	DIO-PWR 3A 70V
.2	CR2	1902-0029	DIO-ZNR 12V 5%
.2	CR14	1902-0040	DIO-ZNR 14V 5%
.2	CR13	1902-0074	DIO-ZNR 7.15V 5%
.2	LED1	1990-0450	LED-LMP
.2	U26	1LH4-0001	TRANSCEIVER
.2	R10	2100-0554	R-V 500 OHM 10%
.2	F1	2110-0001	FUSE 1A 250V
.2	F1	2110-0565	CAP-FUSE HOLDER
.2	F1	2110-0642	FUHLR-EXTR POST
.2	F2,3	2110-0711	5 AMP FUSE
.2	XFMR MOUNT	2200-0107	SCR-MACH 4-40
.2		2200-0205	SCREW-MACHINE
.2	SW1	3101-0680	SW-PB-DPDT
.2	SW3	3101-2264	SW-RKR 4-1A
.2	SW2	3101-2623	SWITCH-SLIDE
.2	L1	9100-0539	IDCTR 10UH 5%
.2	L2,L3,L4,L5	9140-0183	IDCTR 20UH 10%
1		09122-68802	LINE FILTER ASSY
1		2110-0001	FUSE 1A 250V
1		2110-0012	FUSE .5A 250V

Mechanical Parts

1		09114-69511	SONY FLPY DBL SD

Case Parts

1		09121-88866	COVER ASSEMBLY
	HP-IB STDOFF CONNECTION	0380-0643	NUT #6-32/M 3.5

1	FEET-REAR	0403-0427	BUMPER FOOT
1		0515-1079	SCREW-MACHINE
1		0590-0681	NUT-SHMET-U-TP
1	BD.GND,LN FLTR	0624-0583	SCREW,6-32X7/16
1		09121-00110	BASE
1		09121-44410	COVER, PLASTIC
1		09121-48300	PUSH ROD,PLASTIC
1		09121-48302	PILLAR, SUPPORT
1	FRONT FEET	09121-48303	FOOT-MOLDED
1		09121-61611	RIBBON CBLE ASSY
1		09121-61612	DC POWER CABLE
1		09121-68511	FAN ASSEMBLY
1		5041-1203	PWR BUTTON, WHITE
1		8120-1378	CABLE-POWER
1		09122-90000	USER MANUAL
1		09122-90012	U. MANUAL CHG SHT

Exchange Assemblies

1		09114-69511	SONY FLPY DBL SD
1		09122-69501	CTLR-PWR BD

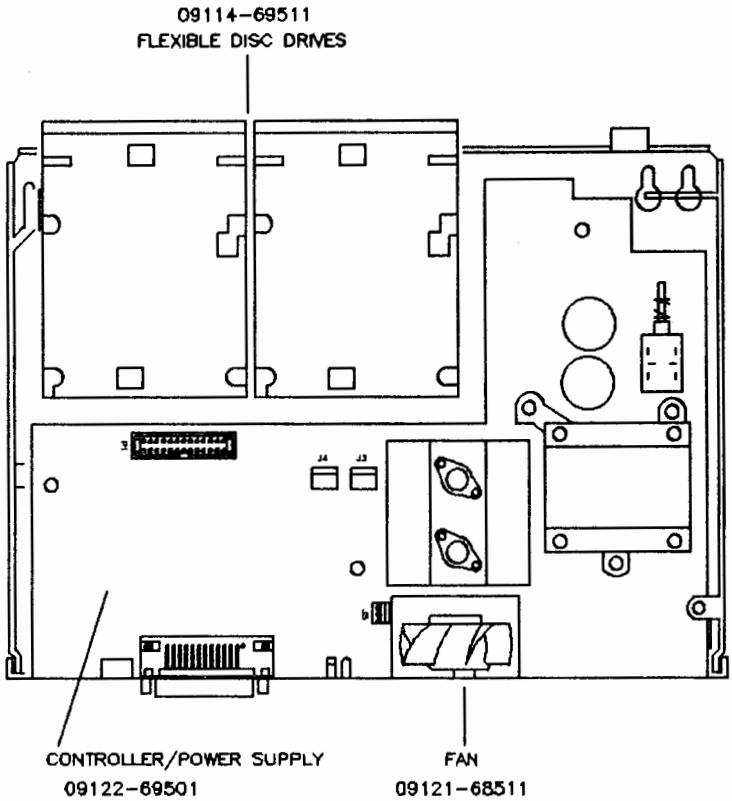

Location of Field Replaciable Assemblies (FRA)

GENERAL INFORMATION

CHAPTER 1

Introduction

The HP 9133D Disc Memory (Figure 1-1) is a random access data storage device. The 9133D contains a 3 1/2-inch double-sided disc drive with a storage capacity of 710 Kbytes and a 5 1/4-inch Winchester disc drive providing a total storage capacity of 15.710 Mbytes.

The 9133D uses the SUBSET 80 command set.

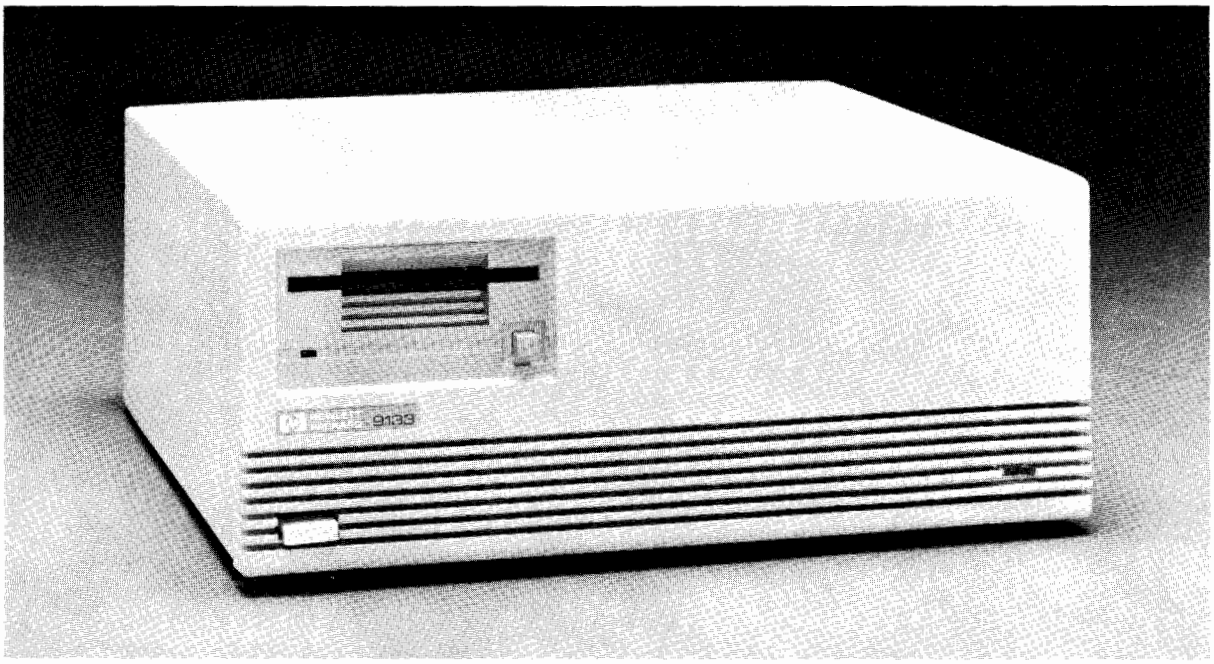

Figure 1-1. HP 9133D Disc Memory

Part Number 5957-6560

Date Printed 9/1/84

Technical Specifications

PERFORMANCE CHARACTERISTICS

	Double-Sided 3 1/2" Flexible Disc	15 Mbyte Winchester Disc
Maximum Formatted Capacity:		
HP 150		
Bytes Per Unit	710 Kbytes	14.8M
Bytes per Sector	512	256
Sectors per Track	9	32
Series 200 (BASIC and Pascal)		
Bytes Per Unit	630 Kbytes	14.8M
Bytes Per Sector	256	256
Sectors per Track	16	32
Series 200 (HPUX)		
Bytes Per Unit	630 Kbytes	16.6M
Bytes Per Sector	256	1024
Sectors per Track	16	9
Tracks per Surface	80	303
Surfaces per disc	2	2 (3 platters)
Tracks per inch	135	345
Recording Format	MFM	MFM
Max Sustained Transfer Rate*	17 Kbytes/sec	145 Kbytes/sec
Average Access Time	497 msec	85 msec
Maximum Access Time	1.742 secs	205 msecs
Rotational Speed	600 rpm	3600 rpm

* Mainframe and interleave dependent.

ENVIRONMENTAL RANGES

	9133D	9134D
Temperature		
Operating	10 to 40 degrees C (50 to 104 degrees F)	10 to 40 degrees C (50 to 104 degrees F)
Non-Operating	-40 to 60 degrees C (-40 to 140 degrees F)	-40 to 60 degrees C (-40 to 140 degrees F)
Humidity		
Operating (non-condensing) 26 degrees C max wet bulb temperature	20% to 80%	8% to 80%
Non-Operating (non-condensing)	5% to 95%	5% to 95%
Altitude		
Operating	0 to 4572m (0 to 15000 ft)	0 to 4572m (0 to 15000 ft)
Non-Operating	-304 to 1524m (-1000 to 50000 ft)	-304 to 1524m (-1000 to 50000 ft)

PHYSICAL CHARACTERISTICS

Size		
Height	125 mm (4.9 in)	125 mm (4.9 in)
Width	325 mm (12.8 in)	325 mm (12.8 in)
Depth	285 mm (11.2 in)	285 mm (11.2 in)
Weight		
Net	10 kg (22.0 lbs)	8.64 kg (19 lbs)
Shipping	16.8 kg (37.0 lbs)	15.5 kg (34 lbs

POWER REQUIREMENTS

Voltage (selected by rear panel switch)	86-127VAC 195-253VAC	86-127VAC 195-253VAC
Frequency	48-66 Hz	48-66Hz
Power	125W	125W

NOTE

All of HP's computers spare 4 complete tracks on the flexible disc. This reduces the usable storage space to 512*9*154 (bytes/sector times sector/track times unspared tracks). This total equals 709.632 Kbytes for the 3 1/2-inch floppy disc drive.

NOTE

The flexible disc in the HP 9133D Disc Memory is designed for operation in a typical office environment. Use of the equipment in an environment containing dirt, dust, or corrosive substances will cause the flexible disc drive and medium life to be drastically reduced.

Equipment Supplied

The following equipment is supplied with each HP 9133/34D disc memory.

Description	Quantity	HP Part Number
AC Power Cord	1	Dependent on location
Operator's Manual	1	09133-90040

A package of ten discs has been set up as a product. This product is orderable using the 92192A product number.

CAUTION

The DISC MEMORY is a precision instrument. Mechanical shock can misalign the READ/WRITE HEAD, resulting in READ ERRORS and/or DAMAGED DISCS whether the disc is operating or not.

When moving the disc unit, care should be taken to prevent excessive shock. Install the cardboard disc supplied with the product in the flexible disc drive before moving it to another location.

Cleaning the Case

Refer to the operators manual supplied with each unit for the complete cleaning procedures.

CAUTION

Chemical spray-on cleaners used for appliances and other household and industrial applications may damage the case finish. Do not use detergents that contain ammonia, benzenes, chlorides, or abrasives.

Installation

CHAPTER 2

Introduction

Refer to Installation chapter of the HP 9133/34 V and XV section of this manual for installation information. Following is additional information which applies to the HP 9133/34D.

Disc Compatibility Between the HP 9121D/S, 9122D/S, 9114A and 9133/D

Table 1 details the recommended usage of single-sided and double-sided discs. The following terms are used:

* "Exchange only" means that the medium should be used only for copying data and programs and should not be used on a daily basis.

* "OK" means that the medium may be used on a daily basis.

* "NO" means that the medium cannot be used.

TABLE 1

	HP 9121	HP 9122,9133D,9114 *
Single-sided HP medium	OK	exchange only
Double-sided HP medium in single-sided format	exchange only	OK
Double-sided HP medium in double-sided format	NO	OK
HP software--single-sided or double-sided medium **	OK	OK

*Use only discs with auto-shutters in the HP 9122, 9133D, and 9114.

**Software provided by Hewlett-Packard has been tailored for the computer/disc system on which the software will be used.

Controls and Indicators

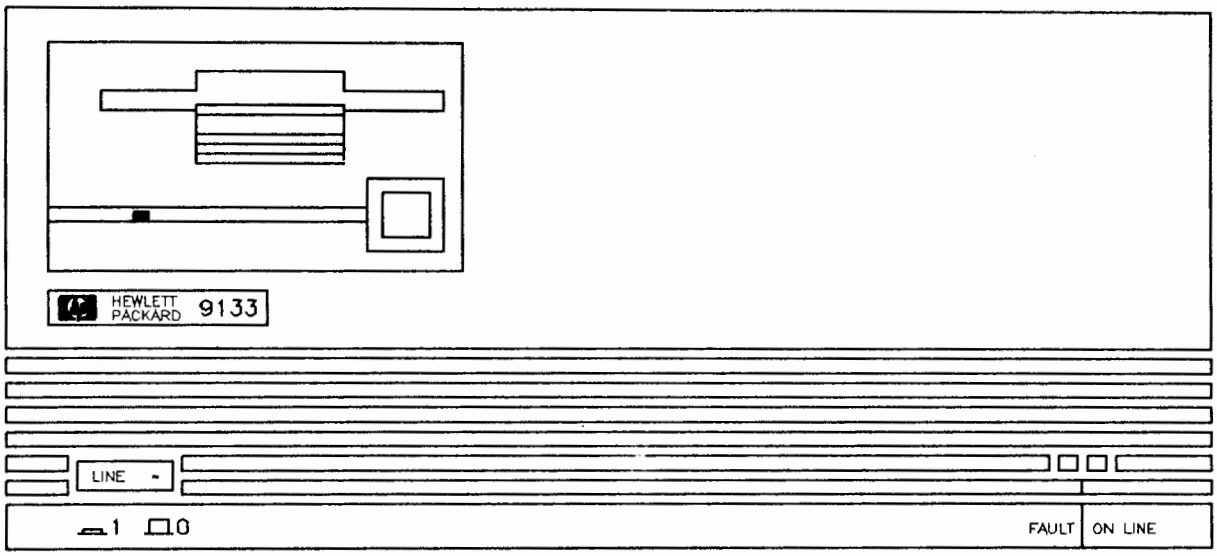

Figure 2-1

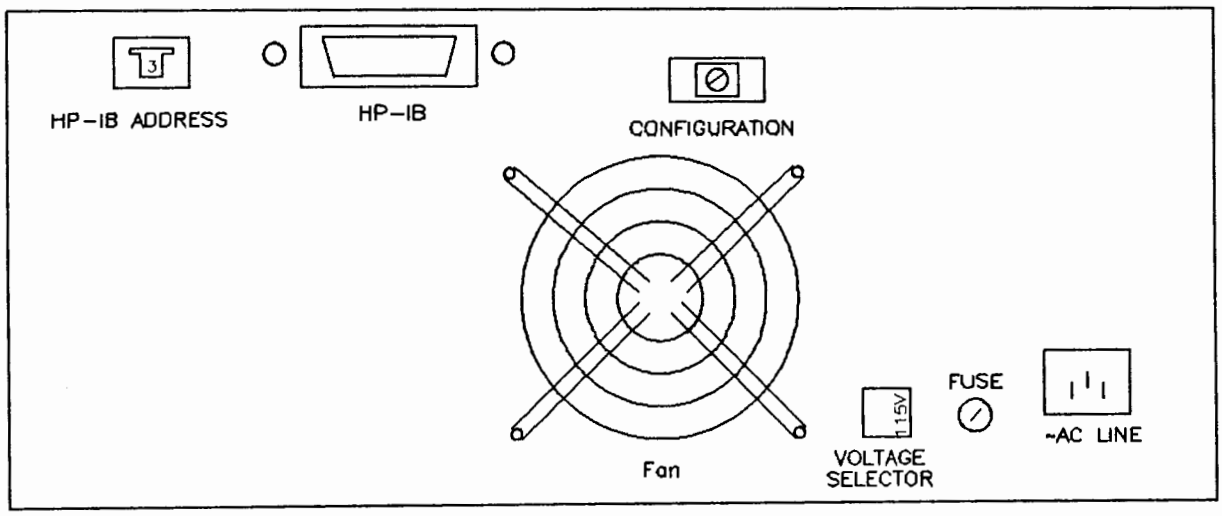

HP 9133D REAR PANEL

Figure 2-2

Media Monitor

Through a feature called Media Monitor, the disc drive automatically monitors the cumulative use of each individual disc. When the usage of a disc approaces a level at which normal disc wear may cause data loss, the disc access light on the front panel blinks and a clicking sound is heard. Commands will still be performed by the computer. However, after a command has been performed, the disc drive immediately resumes the warning indication.

When the Media Monitor warning occurs, immediately copy the disc. If you continue to use this disc, the disc drive will eventually automatically write protect the disc. After that time, you will be able only to read data from the disc or copy the disc.

Volume Configuration

The HP 9133/34D hard disc can be divided into multiple volumes of various sizes. Multiple volumes are available only on Series 200 computers. The following chart shows the selections available. Refer to Figure 2-2 for location of the volume configuration switch.

Configuration Setting	Number of Volumes	Size of Volumes	
		256 bytes/sector	1024 bytes/sector
0	One	14.84 Mbyte/volume	16.64 Mbyte/volume
1	One	14.84 Mbyte/volume	16.64 Mbyte/volume
2	Two	7.37 Mbyte/volume	8.23 Mbyte/volume
3	Three	4.91 Mbyte/volume	5.47 Mbyte/volume
4	Four	3.64 Mbyte/volume	4.03 Mbyte/volume
5	One	12.29 Mbyte/volume	13.76 Mbyte/volume
	One	2.51 Mbyte/volume	2.76 Mbyte/volume
6	Six	2.41 Mbyte/volume	2.65 Mbyte/volume
7	One	9.83 Mbyte/volume	11.00 Mbyte/volume
	Two	2.46 Mbyte/volume	2.70 Mbyte/volume
8	Eight	1.77 Mbyte/volume	1.93 Mbyte/volume
9	One	7.32 Mbyte/volume	8.18 Mbyte/volume
	Three	2.46 Mbyte/volume	2.70 Mbyte/volume

Fuses

The AC line fuse used in the 9133/34D is for both 115 and 230 Vac.

Interface Information

CHAPTER 3

Introduction

Refer to the HP 9133/34 V and XV section of this manual for interface information on the HP 9133/34D. Following is information which applies to the HP 9133/34D.

Setting the HP-IB Address

Figure 3-1 shows the location of the HP-IB address switch. This is a thumbwheel switch with numbers 0 through 9. To select the proper address, turn the thumbwheel untill the number you want appears in the window.

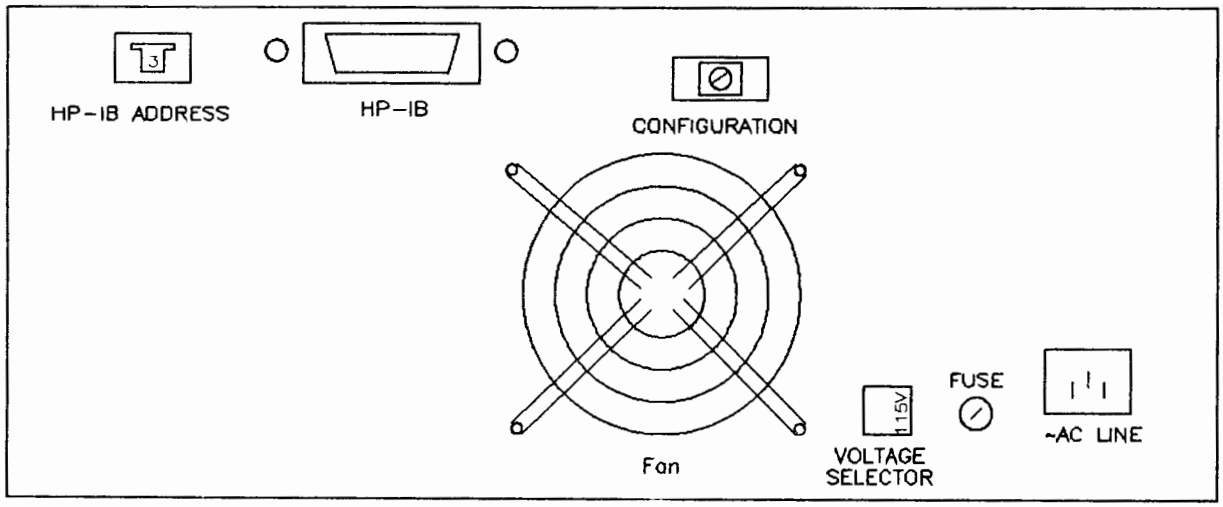

HP 9133D REAR PANEL

Figure 3-1

Troubleshooting

CHAPTER 4

Repair Philosophy

The 3 1/2-inch floppy and 5 1/4 inch Winchester disc drive assemblies are serviced on the exchange program. The assemblies include the drives, the drive electronics PCAs, and the Drive Controller PCA.

The selftest and alignment procedures are given to enable you to isolate problems and correct misalignment in the field.

Power supply information is presented in each tabbed section. Detailed information on the controller is not included.

Exchange Assemblies

PART NUMBER	DESCRIPTION
3 1/2-inch Flexible Disc Drive	-- 09114-69511
15 Mbyte Winchester	-- 09133-69104
Winchester Drive Electronics	-- 09133-69105
Controller Board	-- 09133-69510

Non-Exchange Assemblies

Fan Assembly	-- 09133-68501
3 1/2 in Disc Drive Ctlr Cable	-- 09133-61622
Winchester Disc Ctlr Cable	-- 09133-61623
Winchester Disc R/W Cable	-- 09133-61624
Power Supply	-- 09133-67110
Fuse 3A 250V	-- 2110-0003

Field Service Inventory

The following list of assemblies and parts is recommended in addition to the Field Service Inventory (FSI) which currently exists for the HP 9114A, 9122D/S and the 9133/34XV products.

Controller Board	-- 09133-69510
3 1/2 in Disc Drive Ctlr Cable	-- 09133-61622
Winchester Disc Ctlr Cable	-- 09133-61623
Winchester Disc R/W Cable	-- 09133-61624
Power Supply	-- 09133-67110

Drive Controller and Power Supply Assemblies

Figure 4-1 shows the test-points, adjustments, jumpers, and key components on the Drive Control PCA.

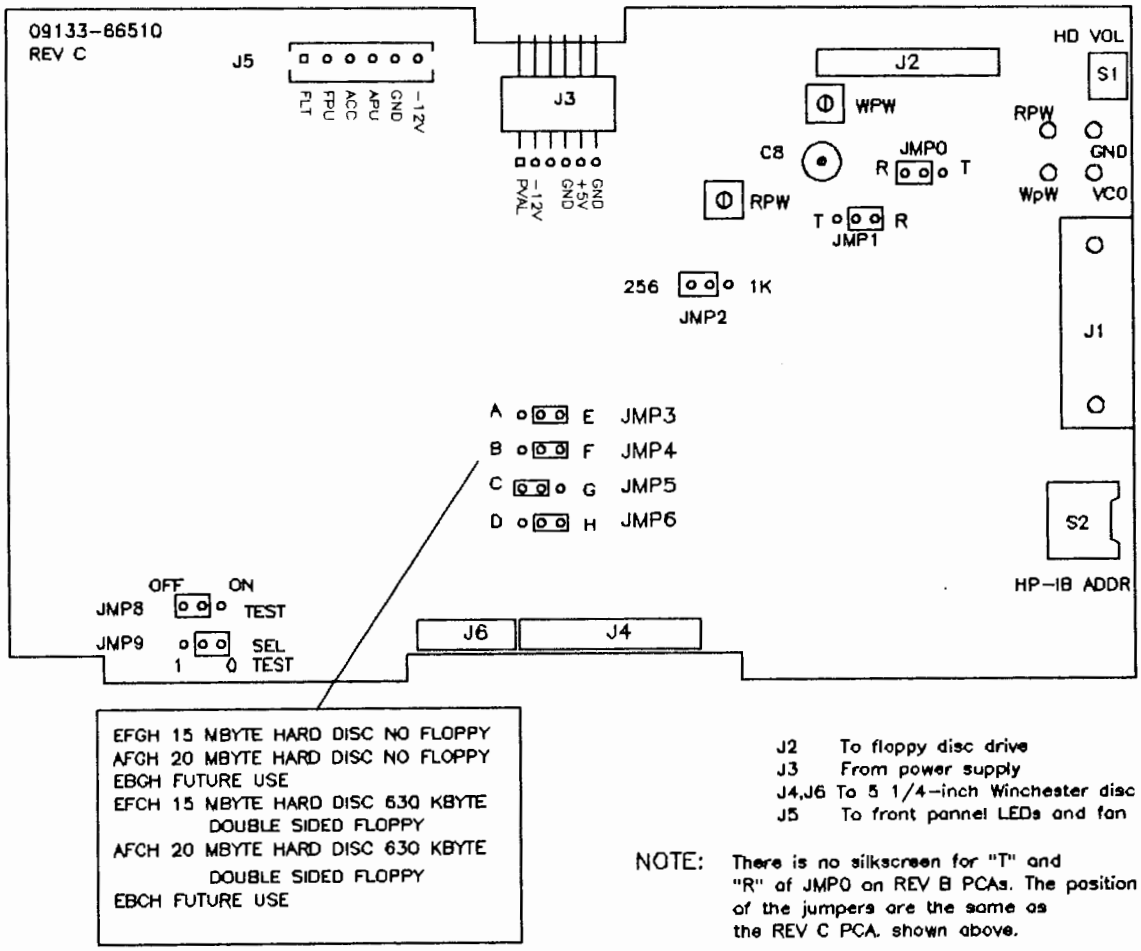

Figure 4-1

Selftest

Computer Museum

Selftest routines can be initiated in 3 different ways and test the 2 different portions of the controller board (3 1/2-inch drive and the 5 1/4 -inch Winchester drive). Selftests are initiated as follows:

1. At power-on a selftest of the processor, ROM, HP-IB chip, microprocessor RAM, buffer RAM, and both drives is performed. The hard disc test includes reading and writing sectors, comparing each byte written, seeking back and forth from track 0 to the maximum track, checking the spindle speed, and checking that the ECC chip functions correctly by introducing errors and correcting them.

2. With a host, the Initiate Diagnostic command can be given.It runs a test similar to those at power on.

   A switch and/or jumper can be set which causes the HP 9133/34D to go into the diagnostic test mode. It interprets the 4 bit HP-IB switch as a selftest to perform. The LED is blinked (to show that it works) and then the test, as selected by the address switch setting, is performed. A successful test is indicated by the LED blinking. A failure causes the LED to stay on. The test results are displayed for 5 seconds. If the test jumper (JMP8) is left on (0), the same test will be performed again. When the service test jumper is no longer in the diagnostic test position, the HP 9133/34D will go through the power-up sequence and will again be in the peripheral mode of operation, waiting for commands over HP-IB.

The following table illustrates how to select the desired test using the HP-IB address switch and the SELECT TEST jumper (JMP9).

TABLE 1

HB-IB ADDRESS SW	SELECT TEST JUMPER	SELECTED TEST
0	0	0
1	0	1
2	0	2
3	0	3
4	0	4
5	0	5
6	0	6
7	0	7
0	1	8
1	1	9
2	1	10
3	1	11
4	1	12
5	1	13
6	1	14
7	1	15

The SELFTEST capability of the HP 9133/34D consists of being able to select and optionally loop on any one selected test from the following choices:

NOTE: Since the RAM test will clear all parameters, some of which are needed for other tests, you can't switch arbitrarily from test to test. The best sequence is as follows:

1. Turn off power.

2. Select the RAM test using TABLE 1 to set the switches correctly. (Refer to Figure 4-1 for jumper locations.)

3. Turn on power. Device will do all or part of power on selftest and will then start doing the RAM test. When the test is completed, the selftest LED should blink 5 times. If it doesn't, the test failed.

4. Turn power off. Select next test.

5. Turn on power. Device will do all or part of the power on selftest and will then start doing the test specified. When the test is completed, the selftest LED should blink 5 times. If it doesn't, the test failed.

6. Now select the next test you want. You can test anything but the RAM test. There is a 4-second wait between tests to "debounce" while you are changing the switches. When the test is completed, the selftest LED should blink 5 times. It it doesn't, the test failed.

7. You can do step 6 over and over until all tests are performed except the microprocessor RAM test.

LED FUNCTIONING

Start	1. LED ON 4 seconds	-will stay here until test selection
	2. LED OFF .5 seconds	-is the same for 4 seconds.
	3. LED ON during test	-test in progress

TEST PASSES	TEST FAILS
4. LED ON/OFF 5 times (.5 seconds each).	4. LED stays ON.
5. Go to start.	5. Go to start.

The results of a successful test are displayed by the FAULT-LED blinking. A failure causes the LED to stay on. Results are displayed for five seconds followed by a complete power-up sequence.

NOTE

A disc must be in the drive to perform test 4,6,8,10, and 12. Ensure that the disc is not write protected and that it is an initialized scratch disc.

Available Test

0	RAM	All possible patterns are written in all locations of both RAMS.
1	ROM	A checksum calculation is performed.
2	HP-IB	Two of the registers on the HP-IB chip are written and their contents verified.
3	FDC chip	Two of the registers on the FDC chip are written and their contents verified.
4	Floppy Seek	Commands are given to the FDC to move the head on and off track 0. The track 0 indicator is checked to see that movement occurred.
5	Winchester Seek	Commands are given to the WD1010 to restore to cylinder 0 and then step off of cylinder 0. The track 0 indicator is checked to see that it works.
6	Floppy Speed	The head is stepped to track 35 and loaded. The period of the index pulse is measured and compared against the specification. No test is performed if there is no medium in the drive.
7	Winchester Speed	The spindle speed of the drive is checked and compared with the allowed range.
8	Floppy Write/Verify	Every sector on the disc is written and the data is verified. All user data on the medium is lost.
9	Winchester Write/Verify	All sectors on the selftest cylinder are written and read. Each byte including the ECC is checked. Error correction is also checked. No user data is affected.
10	Floppy Verify	All sectors in the data area of the disc are checked for CRC errors. No user data is affected.
11	Winchester Verify	All sectors in the data area of the disc are checked for CRC errors. No user data is changed.

12	Floppy Format	The disc is re-initialized with a 011 data pattern.
13	WD1010 Check	All read/write registers on the WD1010 are checked.
14	WD1100 Check	Writes data pattern to all registers with all combinations and verifies the data.
15	WD1100 Data Buffer RAM Test	Test the WD data buffer RAM

Additional Hints

At power on, if the unit does not respond to commands, the fault LED can be used to locate a failing section of the PCA. The LED will respond in one of the following ways:

- LED on solidly	6809 is bad
- LED blinks off once every 6 seconds	ROM checksum is wrong
- LED blinks off 2 times/6 seconds	Processor ram is bad
- LED blinks off 3 times/6 seconds	Buffer ram is bad
- LED blinks off 4 times/6 seconds	Configuration jumpers A thru H set wrong
- LED blinks off 5 times/6 seconds	8291 is bad

NOTE

If you are experiencing **DISC COMPATIBILITY** problems (Flexible Disc Drive), procede to the ADJUSTMENTS section that follows only after you have verified that a known good formatted Flexible Disc presents the same symptoms. This type of problem may mean that the Phase Lock Loop (PLL) has drifted out of tolerance.\NEED 10

Adjustments

The PLL, Read Pulse Width (RPW), and Write Pulse Width (WPW) adjustments are performed as follows. The PLL adjustment should be performed when the unit exhibits read/verify errors or fails the VERIFY test (TEST 10). The RPW and WPW adjustments are not recommended as they rarely drift, and are not

critical. The RPW and WPW procedures are included only for troubleshooting purposes and for the case of unintentional adjustment.

PLL Adjustment

Use Figure 4-1 for locating test points.

1. Power on the unit with the JMP0 jumper in the normal running (R) position, and allow the power-on selftest to finish.

2. Set the JMP0 jumper to the test (T) position. This enables the FDC adjustment mode.

3. After 2 minutes warm up, attatch the frequency counter test leads to the VCO test-point. The frequency should be 500 KHz +-5%. If adjustment is necessary, adjust the variable capacitor C8 for a frequency of 500 KHz +-.2% (+-1 KHz).

4. Return the JMP0 jumper to the original position (R).

5. Verify disc operation.

RPW and WPW adjustment

1. Set jumper JMP1 to the test (T) position.

2. Attach the oscilloscope test lead to the RPW test point.

3. Observe the waveform pulse-width (see FIGURE 4-2). The pulse width should be 250 ns. +-10%.

4. Attach the test lead to the WPW test point and observe the pulse width. The width should be 125 ns. +-10%.

5. The RPW and WPW adjustments are rarely necessary. Perform only if the adjustments were inadvertently altered.

6. Return jumper JMP1 to the (R) position.

7. Verify disc operation.

READ AND WRITE PULSE WIDTH

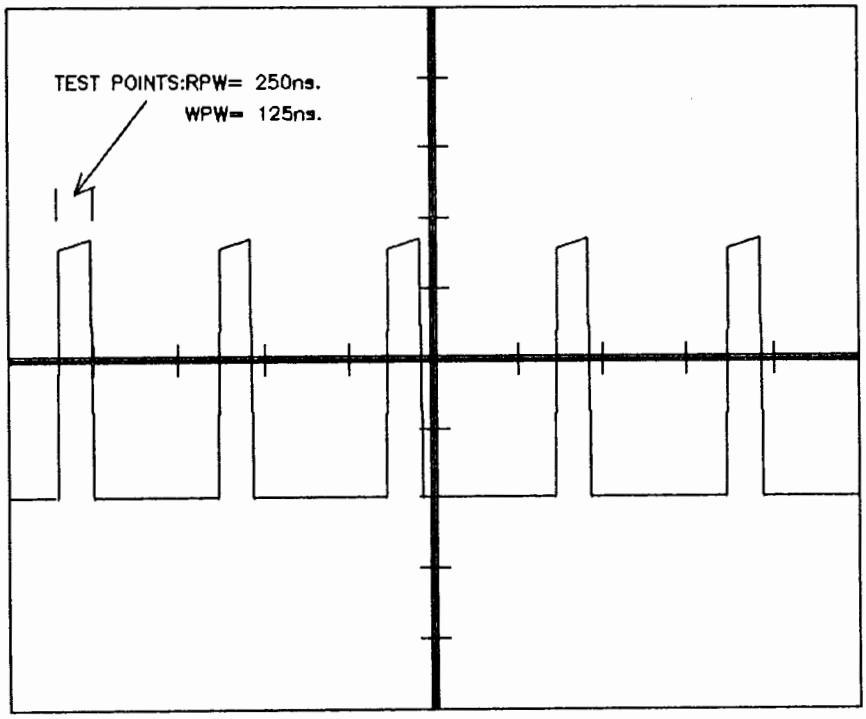

SCOPE SETTINGS: 1V/div., .5usec./div.

Figure 4-2

Assembly Access

CHAPTER 5

Introduction

Refer to the HP 9133/34 V and XV section of this manual for Assembly Access information.

The following is additional information which pertains to the HP 9133/34D.

Controller PCA Removal

To remove the controller board proceed as follows: (The procedure below assumes that you are facing the front of the unit.)

1. Detach cables J2 thru J6.
2. Remove the 3 mounting screws from the left side of the board.
3. Remove the HP-IB connector nuts from the rear of the chassis.
4. Lift the board clear of the chassis.
5. During reassembly, note that the board slides into lanced board guides on the right side of the chassis.

9133/34D PARTS LIST

LEVEL	REFERENCE DESIGNATOR	PART NUMBER	DESCRIPTION
1	A1	09133-69510	FLPY/HRD DISC BD
.2	C8	0121-0552	C-V 7-60PF VAC
.2	C1-7,10-22,25,26, C28-30	0160-4571	C-F .1UF + 80
.2	C31	0160-4803	C-F 68PF 5% 100V
.2	C32	0160-4807	C-F 33PF 5%100V
.2	C37	0160-4809	C-F 390PF 5%
.2	C35,36	0160-4832	C-F .01UF 10%
.2	C38	0160-4833	C-F .022UF 10%
.2	C9,23	0160-4835	C-F .1UF 10% 50V
.2	C39	0160-5861	C-F 100 PF 1%
.2	C24	0180-0291	C-F 1UF 35V 10%
.2	C27	0180-1746	C-F 15UF 20V
.2	R14	0683-1015	R-F 100 OHM .05
.2	R13,15,16	0683-1035	R-F 10K .05 1/4W
.2	R5,6,7,22	0683-3615	R-F 360 OHM .5

.2	R9	0683-4725	R-F 4.7K .05
.2	R8	0698-3438	R-F 147 1% .125W
.2	R21,23	0698-3700	R-F .125W 715 1%
.2	R18	0757-0161	R-F 604 OHM 1%
.2	R17	0757-0274	R-F 1.21K 1%
.2	R1,3,20	0757-0280	R-F 1K 1% .125W
.2	R19	0757-0400	R-F 90.9OHM .01
.2	R11,12	0757-0437	R-F 4.75K 1%
.2	U9	09133-89102	PROM-1
.2	U13	09133-89202	PROM-2
.2	U29	1200-0817	SOCKET 40 PIN
.2	U9,13	1200-0861	SKT-IC 28-CONT
.2	J1	1251-7651	CN24 M AMP CHAMP
.2	J5	1251-8089	CN 6.100 ST HDR
.2	J6	1251-8681	20 PIN CONNECTOR
.2	J2	1251-8682	CN 26.1 SQ POST
.2	J4	1251-8683	CONNECTOR,34 PIN
.2	JMP1-JMP9	1252-0058	CN3.1 SQ POST
.2	JMP1-JMP9	1258-0141	JUMPER-REM
.2	RP1	1810-0083	NTWK-R 13X1K DIP
.2	RP3	1810-0182	NTWK-R24XMULTDIP
.2	RP2	1810-0235	NTWK-R15X2.2KDIP
.2	RP4	1810-0286	NTWK-R 15X10KDIP
.2	U57	1813-0067	XTAL-CLK-OSC
.2	U11	1813-0194	XTAL-CLK-OSC
.2	U55	1813-0346	DLAY LINE 60NSEC
.2	U4,17	1818-1611	IC-STATIC RAM
.2	U5	1820-0471	IC-SN7406N
.2	U37,58,59	1820-0621	TTL BUFF 7438N
.2	U63	1820-0693	IC SN74S74
.2	U19,23,49,53	1820-1112	IC SN74LS74AN
.2	U47,51	1820-1144	IC-74LS02
.2	U46	1820-1196	IC-SN74LS174N
.2	U21,26,35,50	1820-1197	IC SN74LS00N
.2	U27,39	1820-1199	IC-74LS04
.2	U31,32,44	1820-1201	IC-SN74LS08N
.2	U54	1820-1202	IC-74LS10N
.2	U24,43,25,34,45,48	1820-1208	IC-74LS32
.2	U38	1820-1216	IC-SN74LS138
.2	U18	1820-1281	IC SN74LS139N
.2	U56	1820-1285	IC SN74LS54N
.2	U1,40	1820-1416	IC SN74LS14N
.2	U20,22	1820-1433	IC SN74LS164N
.2	U28	1820-1568	IC SN74LS125AN
.2	U30,41	1820-1730	IC SN74LS273N
.2	U61	1820-1782	IC 26S02
.2	U7,33,42	1820-2024	IC-SN74LS244
.2	U8	1820-2075	1C SN74LS245N
.2	U15,16	1820-2096	IC SN74LS393N
.2	U62	1820-2203	IC AM26LS32PC
.2	U14	1820-2536	IC SN74LS352N
.2	U6	1820-2549	IC-8291AP
.2	U12	1820-2624	IC-68B09

.2	U64	1820-2749	IC AM26LS31PC
.2	U29	1820-3168	IC WD1010
.2	U52	1820-3318	IC SN74ALS273N
.2	U2	1820-3431	IC DS75160AN
.2	U3	1820-3513	IC DS75161AN
.2	U10	1820-3659	WD-2793-02 FDC
.2	U60	1820-3705	NAT'L DP8460N-4
.2	CR1	1901-0050	DIO SWITCHING
.2	R2,4	2100-3210	RES-TRMR 10K 1%
.2	R10	2100-3874	RES-VAR 5K 10%
.2		2200-0107	SCR-MACH 4-40
.2	S1	3100-1662	SW-RTRY 10 POS
.2	S2	3100-1951	SW-THUMBWHEEL-10
1		09133-68501	FAN ASSY
1		09133-90040	OPRS MNL 34D,33D
1		09144-45404	GUARD, POWER
1		1450-0625	LED HOLDER
1		2190-0843	WASHER
1		2360-0113	SCR-MACH 6-32
1		3050-0010	WSHR-FL MTLC
1		5041-1203	PWR BUTTON WHITE

FUSES

1	2110-0003	FUSE-3AMPS NB

MECHANICAL PARTS

1	09133-61622	FLPY CTR CABLE
1	09133-61623	DISC CTLR CABLE
1	09133-61624	DISC R/W CABLE
1	8120-1378	CABLE-POWER

CASE PARTS

1	0403-0427	BUMPER FOOT
1	0515-0353	M3X.5X10MM
1	0515-0825	SCR M4X.7 X8MM
1	0515-1079	SCREW-MACHINE
1	0515-1085	SCREW-MACHINE
1	0624-0458	SCR-TPG 8-16

1	0624-0525	SCR-TPG 10-14
1	07940-00026	FAN GUARD
1	09121-48303	FOOT-MOLDED
1	09133-00602	FRT SHIELD-33
1	09133-01201	BRKT,FLPY
1	09133-01202	WIN. BRKT
1	09133-09100	SPRING-RETAINER
1	09133-20101	CHASSIS - 9133
1	09133-40201	FRT PNL- 9133
1	09133-40202	SWITCH SHAFT
1	09133-42501	LIGHT PIPE
1	09133-61606	LED/PWR CABLE
1	09133-61621	PWR HARNESS

EXCHANGE ASSEMBLIES

09114-69511	3 1/2" Drive
09133-69104	15-Mbyte Winchester
09133-69105	Winch. Drive Elec.
09133-69510	Controller Board

NON-EXCHANGE ASSEMBLIES

09133-68501	Fan Assembly
09133-61622	Floppy Cntlr Cable
09133-61623	Disc Cntlr Cable
09133-61624	Disc R/W Cable
09133-67110	Power Supply
09133-08866	Top Cover/Shield Assembly
2110-0003	Fuse 3A 250V

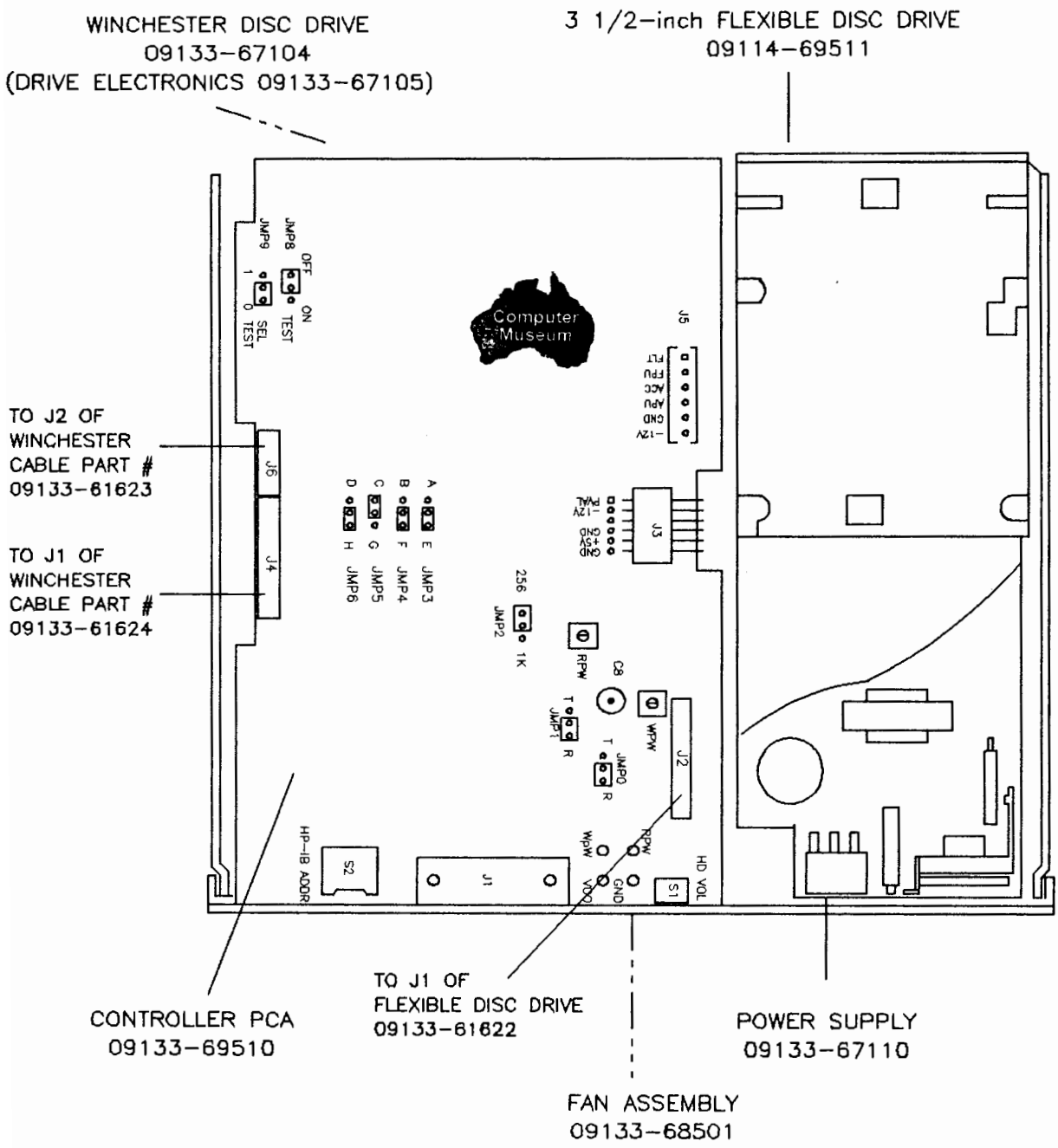

Location of Field Replaceable Assemblies (FRA)

Appendix A
HP Flexible Disc Drive Command Set

Introduction

The following description of the Disc Drive command set is HP-IB rather than CPU oriented. It is given in terms of operations (mainly bytes sent) over the HP-IB. All host computers interfacing to the 9121D/S and the 9133 will use these commands. For the rest of this section where the 9121D/S is referenced, please keep in mind that the implementation is the same for the flexible disc portion of the 9133.

A basic knowledge of the HP-IB operation including primary commands, secondary commands, and parallel poll operation is assumed. An HP publication "Condensed Description of the Hewlett-Packard Interface Bus", Part No. 59401-90030, is available for background information. HP-IB is an implementation of IEEE Standard 488-1978.

HP Flexible Disc Drive	the HP family of flexible disc drives: 82901M, 82902M, 9895M, 9135, 9133, and 9121D/S.
Bus Controller	the current HP-IB controller in charge of the HP-IB.
Controller	micro-flexible disc drive controller hardware or firmware.
Unit	one of two drives connected to the controller.
Flexible Disc, Disc or Diskette	the coated mylar media on which data is recorded by the disc drive.
HP Format	the double density single sided HP standard recording format as defined by this document.
Physical Track Number	the track number relative to the outer most track on the disc.
Logical Track Number	the track number recorded on the disc at a physical track. Logical track numbers may or may not be the same as physical track numbers.
Head	the device used to record or read data on the micro-flexible disc. Even though the 3 1/2-inch drives have only one head, the addressing will mimic the 8290x which has two heads per drive.
Track	the area defined by a cylinder and head address.
Cylinder	the recording area accessible by the head without moving the head actuator.
Sector	the smallest block of data that can be read or written from the disc.
Host System	the system which contains the Bus Controller.

Command Compatibility

The 9121D/S and the 9133 belong to a set of command compatible HP-IB interface disc drives. All of these disc drives meet the "HP-300 compatible HP-IB" standards. The same sequence of HP-IB operations can be used to transfer data to and from any of these discs.

There are some subtle differences between HP-300 Compatible HP-IB and IEEE Standard 488-1978.

(1) An identify code sequence by the host, used to determine what class of devices and which device is connected, is not supported by IEEE 488-1978.

(2) Disc read and write operations cannot be suspended and resumed; i.e., an Untalk or Unlisten command terminates command operation. This is not consistent with IEEE 488-1978.

Since the capacity and organization of a flexible disc is different from other HP-IB compatible discs, the allowable range of certain parameters is also different than the other discs. The 9121D/S and 9133 have been configured to appear exactly as a HP8290x.

Certain commands used in formatting a flexible disc or for diagnostic purposes are unique to the 8290x/9121D/S. Similarly, certain commands supported by other discs are not supported by the 8290x and/or the 9121D/S. An unrecognized command causes an error to be set, but has no detrimental effect on controller operation.

9121D/S and HP 82901/2 Compatibility

The 9121D/S is designed to operate using existing host mass storage drivers for the HP 82901/2. THE 9121D/S's response to commands for a HP 82901/2 will be the same as the response of the HP 82901/2. All necessary transformations of addresses will occur within 9121D/S, so that from host driver standpoint, the 9121D/S will have 35 cylinders, 2 heads, 16 sectors per track, with 256 bytes in each data field, same as the HP 82901/2. The two bytes returned in response to the Identify command from the host will identify the 9121D/S as an HP 82901/2.

To provide extra performance, many commands have been added to the 9121D/S command set that are unsupported by the 8290X. In addition to these new commands, a way to distinguish between the 9121D/S and 8290X is provided in the Request Status command.

Command Sequences

Much of the Flexible Disc Drive command set shown in this section is made up from two basic types of HP-IB sequences.

To send information (commands or data) to the Flexible Disc Drive, the Bus Controller addresses the Flexible Disc Drive to Listen, and then sends a secondary command byte followed by a series of information bytes. The last information byte sent must be tagged with an EOI. Finally the Bus Controller sends an Unlisten command, and the sequence is complete.

To receive information (status or data) from the 9121D/S, the Bus Controller addresses the 9121D/S to Talk, and then sends a secondary command byte. At this point the device sends back a series of bytes. In some cases the last byte will be tagged with EOI. In cases where the last byte is not tagged with EOI, an additional byte tagged with EOI is made available. This extra byte may be used to detect that a byte was dropped on the HP-IB, or it can be used to determine the end of a transfer without maintaining a byte count. Finally the Bus Controller issues an Untalk and the sequence is complete.

Sequences other than the ones shown may in some cases work, but, there is no guarantee that they will be compatible with other HP-IB discs, or with future HP Flexible Disc Drive's.

Parallel Poll Response

Parallel poll is used as an additional means of communication between the 9121D/S and the Bus Controller. If the 9121D/S is ready to accept the next part of a command sequence, it will respond to the parallel poll conducted by the Bus Controller.

After accepting most secondary command bytes the micro-flexible disc drive disables the parallel poll response. This indicates that the device is busy processing the current part of the command sequence. The actual disabling of parallel poll response may occur up to 100 microseconds after the secondary is accepted by the micro-flexible disc drive. Thus, if the drive has the parallel poll enabled, the Bus Controller is fast enough to send a command sequence and then conduct a parallel poll before the 9121D/S has disabled the poll response, the Bus Controller would see the wrong parallel poll response. To solve this problem an intentional delay can be introduced, or a DSJ command (this disables parallel poll response) can be issued before other commands.

The use of the DSJ command as a parallel poll response interlock does not apply in one case. A DSJ cannot be used to disable the poll response which occurs in the middle of certain data transfer command sequences. (For example, in the Buffered Write and Initialize commands, the transfer of data bytes normally provides an interlock.)

Cylinder and Track Numbering

Starting from the outer track, the tracks are numbered sequentially from 0 to 69. These numbers are the PHYSICAL track addresses. A track is the intersection of a cylinder and a head. All addressing is done using a cylinder and head address. The track address is calculated by cylinder times 2 + head. The 9121D/S performs all the necessary conversions and is addressed as an 8290X. There is also a LOGICAL track address associated with each "good" (i.e. non-invisible) track. If a disc has no bad tracks, the logical address of a track is the same as the physical address.

A disc with bad tracks can be made to look like a slightly smaller disc with no bad tracks. To do this, the bad tracks are specially marked to indicate that they have no logical address. A track marked in this way is referred to as an invisible track. The remaining good tracks are sequentially assigned logical track numbers. Logical track 0 is the outer-most good track (it may or may not be physical track 0).

During normal operations the user need be concerned only with logical addresses. The Flexible Disc Drive controller will take care of finding the proper physical address.

Target Addressing

Each unit has a target address associated with it. This is the logical address of the next sector which will be accessed by a Data Transfer command or returned by an address request. This sector is referred to as the target sector. It is uniquely determined by a target cylinder address, a target head address, and a target sector address.

Following a power up or a Clear command the target address will be set to cylinder 0, head 0, sector 0.

A seek command sets the target address to the cylinder, head, and sector indicated in the command sequence.

During a data transfer, the target address is automatically updated so the successive logical sectors can be read or written without issuing a seek to each sector. This includes updates which cross track or cylinder bounds. The 9121D/S, like the HP8290x, is always in cylinder mode, that is, the head address will be incremented before the cylinder address.

As an example of the incrementing of the target address...

Cylinder	Head	Sector
0	0	14
0	0	15
0	1	0
...		
0	1	15
1	0	0

If a data transfer terminates abnormally, the target address is left pointing at the sector which caused the termination.

The D Bit

Each sector has a flag called the D Bit. It is used to indicate that a track is defective (which is different than invisible). The D Bit can be set or cleared using the Initialize command. A set D Bit affects the Read, Write and Format commands and is indicated in the returned status.

The Format command is used to convert all tracks flagged with the D Bit into invisible tracks.

Holdoffs

The 9121D/S does not execute most operations when it enters the DSJ = 2 state (power on state). It is very important to know how this state is entered and the commands that will remove the holdoff.

1) DSJ = 2 or Power on State

This state is entered after:

a. The 9121D/S is powered up,
b. After the execution of the Initiate Selftest command,
c. After the execution of the manual selftests.

As long as DSJ = 2, the commands listed below will not be executed. There are, however, two commands which may be executed either to change the DSJ or override its holdoff. These commands are:

a. The DSJ command,
b. The CLEAR commands.

For both DSJ and Clear the DSJ value will change from 2 to 0.

The only way for the Bus Controller to realize that the device was in the power on state is by sending the DSJ command (which clears the state).

The purpose of this holdoff state is to withhold all operations that may occur during normal 9121D/S usage until the Bus Controller can become aware that the power has been interrupted.

The following is a list of the commands not executed while in the DSJ = 2 state:

a. All Read commands,
b. All Write commands,
c. Verify,
d. Initialize,
e. Format,
f. Seek,
g. End,
h. Request Status,
i. Request Disc Address commands.

The 9121D/S will, however, respond to a primary Talk command from the above group by sending one byte (of value 1) tagged with EOI. Also, all data bytes sent to the 9121D/S as part of the commands listed above will be accepted but ignored. These actions will cause the 9121D/S not to hang (timeout) the HP-IB until the Bus Controller is aware of the holdoff.

Commands

The details of the Disc Drive HP-IB command set are given below. The following conventions are used:

XXXXXXXX	Byte sent between the bus controller and the Disc Drive.
P P D	Parallel Poll response disabled.
P P E	Parallel Poll response enabled.
ADDR	The 9121's current HP-IB address (set by 3 switches on back panel).
P	HP-IB parity bit, ignored by 9121D/S.
UUUU	Unit number (0<=UUUU<=3).
S1	Status one.
S2	Status two.

Command Table

8290X Compatible Commands

	T/L	Secondary	Opcode	Data Bytes	Hold off for DSJ=2
Identify		ADDRS	---	-	NO
DSJ	T	10H	---	1	NO
Read Selftest	T	1FH	---	2	NO
Request Status	L	08H	03H	2	YES
Req Logical Address	L	08H	14H	2	YES
Req Physical Address	L	0CH	14H	2	YES
Send Status or Address	T	08H	---	4	YES
Universal Clear	U	---	---	-	NO
HP-300 Clear	L	10H	---	1	NO
Initiate Selftest	L	1FH	---	2	NO
Seek	L	08H	02H	6	YES
End	L	08H	15H	2	YES
Buffered Read	L	0AH	05H	2	YES
Verify	L	08H	07H	4	YES
Send Data	T	00H	---	-	YES
Buffered Write	L	09H	08H	2	YES
Initialize	L	08H	0BH	2	YES
Format	L	0CH	18H	4	YES
Receive Data	L	00H	---	-	NO

Additional Commands Not On 8290X

Read Loopback Record	T	1EH	---	1-256	NO
Send Wear	L	0CH	16H	3	YES
Write Loopback Record	L	1EH	---	1-256	NO
Download	L	0FH	---	1-256	NO
HP-IB CRC	L/T	11H	---	-	NO
Buffered Read Verify	L	0BH	05H	2	YES
Unbuffered Read Verify	L	0CH	05H	2	YES
Cold Load Read	L	08H	00H	2	NO

Command Table:
H – Hexadecimal number, T – Talk Primary
L – Listen Primary, U – Universal Primary

Sense Commands

Identify

Type: Sense

Purpose: 9121D/S returns a code unique to the flexible disc subsystem to allow for auto configuration of systems. These ID bytes are identical to those of the 8290X.

Description: Upon the reception of a Talk 31 (same as UNTALK) followed by the secondary corresponding to the 9121's current HP-IB address, the 9121D/S will respond by sending the ID bytes of 01 and 04 Hex, the second byte being tagged with EOT.

HP-IB Sequence:

ATN	ATN		EOI	ATN
P1011111	P11ADDRS	00000001	00000100	P11ADDRS
Primary Untalk	**My Secondary**	**ID Byte 1**	**ID Byte 2**	**Other Primary or Secondary**

NOTE

Even though the 9121D/S and 8290X return the same Identify bytes, distinction between the two is possible using the Request Status command.

DSJ

Type: Sense

Purpose: The 9121D/S returns a byte indicating if the last operation completed normally or abnormally, or if the power to the 9121D/S has just been restored. The DSJ command also provides a way to disable the drives's parallel poll response.

Description: After accepting the DSJ secondary, the 9121D/S disables its parallel poll response (within 100 microseconds) and returns a byte (the DSJ byte) reflecting the status of the controller.

DSJ = 0 - The 9121D/S completed its last operation normally.

DSJ = 1 - The 9121D/S aborted its last operation abnormally. Status will indicate the current error. Use the Request Status command to find the cause and clear the DSJ = 1 condition.

DSJ = 2 - The 9121D/S has just completed a power up sequence or selftest and is in the DSJ = 2 holdoff state.

HP-IB Sequence:

DSJ

ATN	**ATN**		**EOI**	**ATN**
P10ADDRS	P1110000	PPD	DSJ	P1011111
Primary Talk	**Secondary**		**DSJ Byte**	**Untalk**

Status (upon command completion):

No errors
- S1 - Unchanged
- S2 - Unchanged
- DSJ - For DSJ = 0 or DSJ = 1 unchanged
  - For DSJ = 2 then 0

Illegal secondary
- S1 - I/O program error
- S2 - Unchanged
- DSJ - 1

Parallel Poll: Parallel Poll is disabled after the reception of the the secondary and is not re-enabled after the completion of the command.

Read Selftest Results

Type: Sense

Purpose: The 9121D/S returns the results of the last selftest it has performed. This is useful after the Initiate Selftest command or after the 9121D/S has been powered on (the 9121D/S performs a minimal selftest at power on).

Description: After receiving the selftest secondary, the 9121D/S makes two bytes of selftest results available.
The second byte will be tagged with EOI.

HP-IB Sequence:

ATN	**ATN**			**EOI**		**ATN**
P10ADDRS	P1111111	PPD	EHUU1000	000TTTTA	PPE	P1011111
Primary Talk	**Secondary**		**Selftest results**			**Untalk**

Where: E - Error Bit. Set if an error has occurred.
H - Head Number. Always 0.
UU - Unit Number. Indicates which unit was selected when the error occurred.
TTTT - Test Number. Number of the failing test.
0001 - RAM test failure
0010 - ROM test failure
0100 - Flexible disc controller chip test failure
0101 - Motor speed error
0111 - Format test error
1000 - Verify test error
0110 - Seek test failure

A - ATTENTION - a test failed
Status: No errors
S1 - 0
S2 - Unchanged
DSJ - Unchanged

Illegal Secondary

S1 - I/O program error
S2 - Unchanged

Parallel Poll: If only one of the specified number of bytes is accepted by the HP-IB Controller, the parallel poll response is assured to be re-enabled upon the reception by the 9121D/S of the Untalk command.

Read Loopback Record
Type: Sense

Purpose: The 9121D/S sends up to 256 bytes (see Write Loopback Record) from its internal data buffer over the HP-IB. This is used by diagnostics to test the HP-IB data path.

Description: Upon accepting the loopback secondary, the 9121D/S sends the bytes stored in its internal buffer. The most significant byte of the first word is transferred first. The 256th byte will be tagged with an EOI and the transfer terminated. If fewer than 256 bytes are requested, the device will realize that the transfer is complete when:

1. The 9121D/S has been untalked.
2. It accepts another byte from the HP-IB.

HP-IB Sequence:

Read Loopback Record

ATN	**ATN**				**EOI**	**ATN**
P10ADDRS	P1111110	PPD			PPE	P1011111
Primary Talk	**Secondary**		**1 to 256**	**Data Bytes**		**Untalk**

Status: No errors

S1 - 0
S2 - Unchanged
DSJ - Unchanged

Parallel Poll: If less than the specified number of bytes is accepted by the HP-IB Controller, the parallel poll response is assured to be re-enabled upon the reception by the device of the Untalk command.

Request Status

Type: Sense

Purpose: The 9121D/S returns four bytes of status information. These status bytes indicate how the last attempted operation was completed, which unit was involved, and the current status of the unit specified.

Description: After receiving the Request Status command, the parallel poll response is disabled. If the unit specified is not the unit used in the last disc operation where an error occurred, the 9121D/S attempts to determine the type and format of the disc in the selected unit. After the status operation has completed the parallel poll response is re-enabled. The Bus Controller should now send the Send Status command.

After the Send Status secondary, the 9121D/S sends four bytes of status information. The first two bytes (known as Status 1) includes information about the last operation which the device performed. The Status 1 (S1) Unit field indicates which drive was involved in the operation. The D Bit is set if a D bit was encountered during the operation.

HP-IB Sequence:

Request Status (Buffered)

ATN	**ATN**			**EOI**		**ATN**
P01ADDRS	P1101000	PPD	00011	UUUU	PPE	P0111111
Primary Listen	**Secondary**		**Opcode**	**Unit**		**Unlisten**

Send Status

ATN	**ATN**				
P10ADDRS	P1101000	PPD	00DSSSSS	UUUU	
Primary Talk	**Secondary**		**Status 1**		

		EOI	**ATN**
* TTTTR	AW/EFCSS	PPE	P1011111
	Status 2		**Untalk**

Where: D -- D Bit
SSSSS -- Status 1 (See following explanation)
UUUU -- Unit number
* -- Set if one or more starred bits in Status 2 is set
TTTT -- Disc type
R -- The 9121D/S will set this bit to 1. The 8290X sets this bit to 0.
A -- Drive attention
W -- Disc write protected
E * -- Drive fault
F -- First status bit
C * -- Seek check
SS * -- Drive ready status

Status 1	Meaning
00000	Normal Completion. The operations completed without error, or the controller has just been cleared, or powered up.
00001	Illegal Opcode. The last command contained an opcode which is not recognized by the 9121D/S.
00111	Cylinder Compare Error. The target cylinder was not found.
01000	Uncorrectable Data Error. The disc read or verify operation was terminated because a data error was detected. This is the CRC error.
01001	Sector Compare Error. The target sector cannot be found in the current track. Up to five passes of the track are made before this status is set.
01010	I/O Program Error. An illegal HP-IB secondary or command sequence has been received by the controller. This status can only be set if the previous S1 was zero.
10001	Defective Track or Sector. During a write, read, or verify, a set D Bit was encountered.
10010	Retryable Hardware Error. An internal hardware timing error occurred during a data transfer or seek. The operation should be retried once.
10011	Status 2 Error. Some condition indicated in Status 2 prevented the drive related operation from completing normally. These conditions include: 1. Specified unit is between 0 and 3 but that drive is not connected to the controller. (The 9121D/S has only units 0 and 1.) 2. There is no disc in the drive. 3. A hardware problem is detected in the drive. 4. The disc is unformatted or has an unknown format. 5. The disc is write protected (error only during a disc write operation). 6. The selected drives First Status Bit is set.
10111	Unit Unavailable. A command included a request for a unit number greater than 3.
11111	Drive Attention. The indicated drive is requesting attention because: 1. A seek completed normally. 2. A seek command failed due to: a. Drive fault, b. Out of bounds target cylinder or sector, c. The controller cannot find the target address.

Status 2	Meaning
*	Status 2 Error. This bit is set if one or more of the following bits are set in Status 2: a. Drive Fault b. Seek Check

c. Any drive Not Ready error

TTTT	Disc Type. These four bits indicate the type and format of the disc currently present in the selected drive as follows: 0000 - Empty drive or drive not present 0101 - Blank or Unknown format 0110 - HP format
A	Attention. This bit is set when a seek completes (successfully or unsuccessfully). It is cleared after the status is read.
W	Write Protected. The disc in the selected drive has the write protect tab in the edge-most position, or the disc has exceeded the allowed wear for a disc, or the spindle speed of this disc is out of specification at Format time.
E	Drive Fault This bit is set if a drive hardware failure is detected. Drive Fault is cleared after the status is read.
F	First Status Bit. This bit is set when a disc is present in the selected drive after: a. Power on, b. Self test completion. First Status is cleared after the status is read. Because of hardware limitations imposed by the drives, this function is not available at this time. This bit is always 0.
C	Seek Check. This bit is set when a seek fails for one or more of the following reasons: a. An out of bounds target sector was specified b. An attempt was made to access a non-existent physical track, c. The seek algorithm could not find the target logical track. The Seek Check bit is cleared after the status is read.
SS	Drive (NOT) Ready. These two bits indicate the status of the selected drive as follows: 00 -- Drive Ready 11 -- No disc in drive or no drive connected

NOTE

If DSJ = 1, then the bits in the Status 2 word will not necessarily be set correctly. The R bit always reflects whether the device is a 9121D/S or 8290X.

Status: No errors

S1 - 0
S2 - the A, E, F, and C bits are cleared
DSJ - 0

Illegal secondary, Illegal command length, Illegal command opcode

S1 - I/O program error
S2 - Unchanged
DSJ - 1

Parallel Poll: If less than the specified number of bytes is accepted by the HP-IB Controller, the parallel poll response is assured to be re-enabled upon the reception by the 9121D/S of the Untalk command.

An extra byte (the value of 1) tagged with EOI will be sent if the controller requests more than four bytes.

Request (Logical) Disc Address

Type: Sense

Purpose: The 9121D/S returns bytes indicating the current Target address. This command is used to determine the address of the offending sector after a data error has occurred.

Description: Following reception of the appropriate command sequence the 9121D/S returns four bytes indicating the current target sector. This includes two bytes of target cylinder address, one byte of target head address, and one byte of target sector address.

HP-IB Sequence:

Request (Logical) Disc Address

ATN	ATN			EOI	ATN
P01ADDRS	P1101000	PPD	10100	PPE	P0111111
Primary Listen	**Secondary**		**Opcode**		**Unlisten**

Or

ATN	ATN			EOI	ATN
P01ADDRS	P1101010	PPD	10100	PPE	P0111111
Primary Listen	**Secondary**		**Opcode**		**Unlisten**

Send Address Command

ATN	ATN						
P10ADDRS	P1101000	P P D					
Primary Talk	**Secondary**		**Cylinder**	**Address**			**ATN**
						P P E	P1011111
			Head	**Sector**			**Untalk**

Status: No errors
S1 - 0
S2 - Unchanged
DSJ - 0

Illegal secondary, Illegal command sequence, Illegal byte count

S1 - I/O Program error
S2 - Unchanged
DSJ - 1

Illegal opcode
S1 - Illegal opcode
S2 - Unchanged
DSJ - 1

Parallel Poll: If less than the specified number of bytes is accepted by the HP-IB Controller, the parallel poll response is assured to be re-enabled upon the reception by the device of the Untalk command.

An extra byte (the value of 1) tagged with EOI will be sent if the controller requests more than 4 bytes. However, this request is not necessary for normal operations.

Request (Physical) Disc Address

Type: Sense

Purpose: The 9121D/S returns bytes indicating the physical cylinder on which the head actuator is positioned. This is useful for calculating the number of invisible tracks between the outer most track and the current track. This is done by subtracting the physical cylinder address from the target cylinder address.

Description: After receiving the Request Physical Address secondary and opcode, the 9121D/S returns two bytes containing the physical cylinder address, one byte containing the head address and one byte of zeros.

HP-IB Sequence:

Request Physical Address

ATN	**ATN**			**EOI**		**ATN**
P01ADDRS	P1101100	PPD	10100		PPE	P0111111
Primary Listen	**Secondary**		**Opcode**			**Unlisten**

Send Address

ATN	**ATN**					
P10ADDRS	P1101000	PPD				
Primary Talk	**Secondary**		**Cylinder Address**			
						ATN
				00000000	PPE	P1011111
			Head			**Untalk**

Status: (See Request Logical Address)

Parallel Poll: (See Request Logical Address)

Send Wear

Type: Sense

Purpose: The 9121D/S returns bytes indicating the number of revolutions which the disc has accumulated with a loaded head. This command may be used by a host system to warn a user of impending disc wear (and the blinking light indicator).

Description: After receiving the Send Wear secondary and opcode and the Send Status command, the 9121D/S returns four bytes containing the number of revolutions recorded on the disc.

HP-IB Sequence:

Send Wear

ATN	**ATN**					
P01ADDRS	P1101100	PPD	10110	00000001		
Primary Listen	**Secondary**		**Opcode**	**Control Byte**		
				EOI		**ATN**
				UNIT	PPE	P0111111
				Unit		**Unlisten**

Send Status

ATN	**ATN**					
P10ADDRS	P1101000	PPD				
Primary Talk	**Secondary**		**Most Sign. Byte**	**Middle Byte**		
						ATN
				xxxxxxxx	PPE	P1011111
			Least Sign. Byte	**Dummy Byte**		**Untalk**

Status: (See Request Logical Address)

Parallel Poll: (See Request Logical Address)

Control Commands

Universal Device Clear

Type: Control

Purpose: A Clear places the 9121D/S in a known state. Thus it is useful when initializing a system on power up or after a host system crash. The Clear also allows a power up DSJ of 2 to be cleared by sending a single byte. This is useful if the system is being reconfigured.

Description: Upon reception of a Universal Device Clear command, the 9121D/S stops handshaking with the HP-IB, parallel poll response is disabled and the following are performed:

a. The P8291A is reset,
b. Status 1 is cleared,
c. Status 2 is updated appropriately,
d. DSJ set to 0,

e. All drives are recalibrated to physical track 0,
f. The Target address is set to cylinder 0, head 0, sector 0
g. The unit is set to 0, the head is unloaded and the motor is turned off.

This command may take several seconds to complete.

HP-IB Sequence:

Universal Device Clear

ATN		
P0010100	P P D	P P E
Universal		

Status: No errors
S1 - 0
S2 - All bits cleared, then the E and SS bits are set if appropriate.
DSJ - 0

Parallel Poll: The parallel poll response is re-enabled after the operation is completed, normally or abnormally.

HP-300 Clear

Type: Control

Purpose: This command gives the user the capability to place the 9121D/S controller in a known state.

Description: After reception of the HP-300 Clear secondary, the data byte, and the Selected Device Clear Universal, the controller performs the actions described above under Universal Device Clear. This command may take several seconds to complete.

HP-IB Sequence:

HP-300 Device Clear

ATN	**ATN**			**EOI**	**ATN**		**ATN**
P01ADDRS	P1110000	P P D			P0000100	P P E	P0111111
Primary Listen	**Secondary**		**Dummy Byte**		**Selected Device Clear**		**Unlisten**

Status: No errors
S1 - 0
S2 - All bits cleared, then the E and SS bits are set if appropriate.
DSJ - 0

Illegal secondary, No data byte, Data not tagged with EOI

S1 - I/O Program error
S2 - Unchanged
DSJ - 1

Parallel Poll: The Parallel Poll response is re-enabled after the operation is completed, normally or abnormally.

Initiate Selftest

Type: Control

Purpose: This command gives the user the capability to remotely initiate the 9121D/S selftest. The selftest results may then be read back using the Read Selftest Results command.

Description: Two bytes are sent following the selftest secondary and contain the following information:

The first byte is ignored by the 9121D/S. The W bit in the second byte is interpreted as follows:

0 -- No format test is performed.
1 -- The format test is performed.

If the format test is selected, a disc is required in all drives and all data on the disc(s) will be lost.

After the execution of the selftest the controller will be in the same state as a power on condition would leave it.

HP-IB Sequence:

Initiate Selftest

ATN	ATN			EOI		ATN
P01ADDRS	P1111111	PPD		W	PPE	P0111111
Primary Listen	**Secondary**		**Dummy**	**Control**		**Unlisten**

Status: No errors
S1 - 0
S2 - Cleared, then the E, F, and SS bits are set if appropriate.
DSJ - 2

Parallel Poll: The parallel poll response is re-enabled after the operation is completed, normally or abnormally.

Write Loopback Record

Type: Control

Purpose: The 9121D/S stores up to 256 bytes in its internal buffer. A diagnostic could use the command, along with the Read Loopback Record command, to test the operation of the HP-IB link.

Description: After receiving the Write Loopback Record secondary, the controller will store up to 256 bytes in the internal buffers. If less than 256 bytes are send, the last byte must be tagged with an EOI.

HP-IB Sequence:

Write Loopback Record

ATN	ATN				EOI	ATN
P01ADDRS	P1111110	PPD			PPE	P0111111
Primary Listen	**Secondary**		**1 to 256**	**Data Bytes**		**Unlisten**

Status: No errors.
S1 - Unchanged
Stat2 - Unchanged
DSJ - Unchanged

Parallel Poll: If less than the specified number of bytes is accepted by the HP-IB controller, the parallel poll response will be re-enabled by the Unlisten command.

Download

Type: Control

Purpose: This command allows the downloading and execution of 6809 code into the controller's internal (RAM) memory. It is intended for diagnostic purposes only, and as such should be used with care.

Description: After receiving the Download secondary, up to 256 bytes are stored in the controller's RAM. Following the reception of the last byte, the code will be executed starting at the first byte.

HP-IB Sequence:

Download

ATN	ATN				EOI
P01ADDRS	P1101111	PPD			???
Primary Listen	**Secondary**		**1 to 256**	**Bytes**	

Status: Dependent upon the downloaded code

Parallel Poll: Dependent upon the downloaded code.

Seek

Type: Control

Purpose: The Seek command updates a unit's target address and moves the head to the new target track. A seek usually precedes a data transfer operation or a series of consecutive data transfers.

It is important to note that the 9121D/S controller is totally dedicated to the selected drive during any drive related operation (e.g., the Seek command). This disallows any overlapped seek operation between multiple drives.

Description: The 9121D/S receives 6 bytes, including the seek opcode, the unit number, and the target cylinder, head and sector address. Checks are made to assure that the specified drive is available, that the entire command has been received, and that the new target address lies within the following bounds:

Cylinder Address: $0 <= C <= 34$
Head Address: $0 <= H <= 1$
Sector Address: $0 <= S <= 16$

NOTE

The 9121D/S allows a sector of address 16 to be accessed. This is included for possible future non-HP format compatability. The target address is still incremented from sector 15 to 0.

If any of these test fail, the status is updated and the seek command is aborted with a "Seek check" indication.

The following algorithm is used to locate a logical target track during the seek operation:

a. Determine if present logical track is the same as that requested. If they are, then seek is complete, else proceed with step b.

b. Estimate the direction and number of steps to the target cylinder,

c. Step actuator to target, and read current head position,

d. If not at target cylinder address, repeat steps (b) and (c) until target found or retry exhausted.

HP-IB Sequence:

ATN	**ATN**			
P01ADDRS	P1101000	P P D	00010	UUUU
Primary Listen	**Secondary**		**Opcode**	**Unit**

<--- Cylinder--->

		EOI	**ATN**	
			P0111111	P* P E
Head	**Sector**		**Unlisten**	

* On seek completion

Status:

Successful Seek
- S1 - Drive Attention
- S2 - The A bit is set (Drive Attention)
- DSJ - 0

Unsuccessful Seek
- a. Illegal seek parameter, Target track not found, Off end of disc.
  - S1 - Drive Attention
  - S2 - The A and C (Seek check) bits are set
  - DSJ - 1
- b. Track 0 indicator not found when expected.
  - S1 - Drive Attention
  - S2 - The A and E (drive fault) bits are set
  - DSJ - 1

Illegal command length
- S1 - I/O Program Error
- S2 - Unchanged
- DSJ - 1

Illegal unit specification
- S1 - Unit Unavailable
- S2 - Unchanged
- DSJ - 1

DSJ = 2 Holdoff
- S1 - Unchanged
- S2 - Unchanged
- DSJ - 2

No disc or not ready, 1st Status Bit holdoff, Disc not formatted or of unknown format

- S1 - Status 2 Error
- S2 - Unchanged
- DSJ - 1

Parallel Poll: The parallel poll response is re-enabled after the operation is completed, normally or abnormally. Normal completion is when the target cylinder is reached.

End

Type: Control

Purpose: The End command causes the disc system to cease responding to a parallel poll and puts the controller and drives in a "stand by" state.

Description: The End command should be issued after a series of commands to a single unit have been completed. The following is performed by the 9121D/S upon reception of an End command:

a. S1 - 0
   S2 - Unchanged
   DSJ - 0
b. Disable Parallel Poll response.

Computer Museum

HP-IB Sequence:

End Command

ATN	ATN			EOI	ATN
P01ADDRS	P1101000	PPD	10101		P0111111
Primary Listen	**Secondary**		**Opcode**		**Unlisten**

HP-IB CRC Secondary

Type: Control

Purpose: The HP-IB CRC secondary is part of the 9121D/S command set for compatability with existing and future drivers. This command does nothing. It is accepted by the 9121D/S and then forgotten.

Description: The 9121D/S can be addressed to talk or listen. If addressed to listen, any number of data bytes may be sent. If addressed to talk, and EOI will be sent over the HP-IB.

HP-IB Sequence:

HP-IB CRC Secondary

ATN	ATN			
PXXADDRS	P1110001	PPD		PPE
Primary Talk or Listen	**Secondary**		**Don't Care**	

Parallel Poll: The parallel poll response is re-enabled after the operation is completed, normally or abnormally.

Disc Read Commands

Buffered Read

Type: Disc Read

Purpose: Data is transferred through an internal buffer in the 9121D/S before being sent to the HP-IB. This allows HP-IB data transfers to be asynchronous with the disc, and to vary from an arbitrarily low rate to about 82 Kbytes per second. The maximum number of bytes to be transferred in a buffered read is 256 (1 sector), the read request must be repeated for each additional sector transferred.

Description: Following reception of the read command, the parallel poll response is disabled, and the status of the specified unit is checked. If the Unit can be accessed, then the target sector's 256 bytes are read into the controllers buffer. If the read completes sucessfully, then the target address is incremented by one sector. If the sector is not found, a CRC error is indicated, or if a D Bit is encountered, the target address is not incremented.

After the data has been buffered into the controller the parallel poll response is re-enabled, indicating that the device has data ready to transmit. The Bus Controller should request the data by issuing the Send Data secondary. Upon receiving the secondary the 9121D/S again disables parallel poll response.

If the read was terminated before data was loaded into the buffer (i.e., any error except CRC or D Bit on), the device will respond by sending EOI tagged byte, and enabling parallel poll response.

If there was no error, or the a CRC error or D Bit was encountered, the sector's worth of data is made available. The Bus Controller can take any number of bytes up to a sectors length. If more than 1 sector is requested, the 9121D/S will send a byte tagged with EOI. The number of bytes taken has no effect on the updating of the target address.

If the D Bit or CRC error occurs, the corresponding data may be invalid.

The parallel poll response will be enabled after sending the last byte, sending another secondary to the 9121D/S or by untalking the 9121D/S.

If more than 1 sector is to be transferred, any number of buffered reads can be used in succession. If an error is encountered, all following reads will be held off due to a bad DSJ, so there is no chance of an error in the middle of a long read going unreported. However, error detection will be quickened if:

a. A DSJ is used after each read
b. The reception of an EOI is used to indicate an error

HP-IB Sequence:

Buffered Read Request

ATN	**ATN**			**EOI**		**ATN**
P01ADDRS	P1101010	PPD	00101	UUUU	PPE	P0111111
Primary Listen	**Secondary**		**Opcode**	**Unit**		**Unlisten**

Send Data Request

ATN	**ATN**				**ATN**
P10ADDRS	P1100000	PPD		PPE	P1011111
Primary Talk	**Secondary**		<-- Data bytes -->		**Untalk**

Status:

No errors
- S1 - 0
- S2 - Unchanged
- DSJ - 0

Unsuccessful Read
- S1 - Error
- S2 - the A, E, and C bits are set if appropriate
- DSJ - 1

Requirements for execution:

a. 2 data bytes received in command
b. Unit 0<=U<=3
c. DSJ <> 2
d. Disc present and ready
e. Not First Status
f. Status 1 = Normal completion,
I/O program error, or,
Illegal opcode error.

Parallel Poll:

The Parallel Poll response is re-enabled after the operation is completed, normally or abnormally.

If less than the specified number of bytes is accepted by the HP-IB Controller, the parallel poll response is assured to be re-enabled upon the reception of the Untalk command by the 9121D/S.

An extra byte (the value of 1) tagged with EOI will be sent if the controller request more than 256 bytes. However, this request is not necessary for normal operations.

Unbuffered Read

Type: Disc Read

Purpose: The unbuffered read allows more than one sector to be transferred from the disc to the bus controller using a single command.

Description: Following reception of the read command, the parallel poll response is disabled, and the status of the specified unit is checked. If the unit can be accessed (see the requirements for execution), the internal buffer is filled with a sector of data from the disc, just as in a Buffered Read. At this time, the 9121D/S waits for the Send Data command, then begins sending data to the bus controller. When all the bytes from the sector have been sent, the 9121D/S reads the next sector into the internal buffer and sends it to the bus controller. This process continues until a termination condition is reached:

1. If the unit becomes unavailable, or a sector cannot be found when the buffer is empty, or if a CRC error or D bit is encountered, the sector in the buffer is sent followed by an EOI.

2. If at any time during the operation the 9121D/S notices that it has been untalked or that the bus controller has sent a byte on the HP-IB, the process is stopped.

Following any of the above terminations, status is updated and parallel poll response is re-enabled. If there was an error in reading the data from the disc, the target address is left pointing to the sector in which the error occurred. Otherwise, the target address points to the sector following the last sector read from the disc. Occurrence of the error will cause a dummy byte tagged with EOI to be transmitted to the host system, thereby terminating the read process.

As has been seen, the Unbuffered Read actually uses the internal buffer to store the data. However, the protocol used is unbuffered in that the parallel poll response is not used to indicate when data is available. Thus, there is a pause in data flow to the HP-IB each time the buffer is refilled from the disc. This pause occurs at the beginning of the read and after every sector has been transferred. Depending on when the read is started and the sector interleaving, this pause may be up to 200 milliseconds long.

HP-IB Sequence:

Send Data Request

ATN	**ATN**				**ATN**
P10ADDRS	P1100000	P P D		P P E	P1011111
Primary Talk	**Secondary**		<-- Data bytes -->		**Untalk**

Status:

No errors
- S1 - 0
- S2 - Unchanged
- DSJ - 0

Unsuccessful Read
- S1 - Error
- S2 - the A, E, and C bits are set if appropriate
- DSJ - 1

Requirements for execution: See Buffered Read.

Parallel Poll: The Parallel Poll response is re-enabled after the operation is completed, normally or abnormally.

If less than the specified number of bytes is accepted by the HP-IB Controller, the parallel poll response is assured to be re-enabled upon the reception of the Untalk command by the 9121D/S.

Verify

Type: Disc Read

Purpose: The Verify command is a read which does not transfer data to the HP-IB. This is useful for performing a surface analysis of the disc or checking the integrity of the data on the disc.

Description: As with other read commands, parallel poll is disabled, and the availability of the unit is checked. Starting with the target sector, consecutive sectors are read until any of the following occurs:

a. Unable to begin verify operation,
b. Sector count given in the command expires,
c. A seek or read error occurs,
d. A sector marked defective is detected,
e. The end of the disc is reached.
f. A track marked invisible is detected

Parallel poll response is re-enabled upon completion of the verify. If an error was detected, the target address points to the sector in which the error occurred. Otherwise, the target address points to the sector following the last sector read.

HP-IB Sequence:

Verify Request

ATN	**ATN**					
P01ADDR **Primary Listen**	P1101000 **Secondary**	P P	00111 **Opcode**	UUUU **Unit**	D	
				EOI		**ATN**
					P P E	P0111111
			Sector Count			**Unlisten**

Status:

No errors
- S1 - 0
- S2 - Unchanged
- DSJ - 0

Verify error
- S1 - Error
- S2 - The A, E, and C bits are set if appropriate
- DSJ - 1

Requirements for execution:

a. 4 data bytes in command
b. 0<=Unit<=3
c. DSJ <> 2
d. Disc present and ready
e. Not First Status Bit
f. Sector Count >= 0

Parallel Poll: The parallel poll response is re-enabled after the operation is completed, normally or abnormally.

Buffered Read Verify

Type: Disc Read

Purpose: The Buffered Read Verify is identical to the Buffered Read command. No reduced margin read is done.

Description: See Buffered Read.

HP-IB Sequence:

Buffered Read Verify Request

ATN	**ATN**			**EOI**		**ATN**
P01ADDRS	P1101011	PPD	00101	UUUU	PPE	P0111111
Primary	**Secondary**		**Opcode**	**Unit**		**Unlisten Listen**

Send Data Request

ATN	**ATN**					**ATN**
P10ADDRS	P1100000	PPD	<-- Data bytes -->		PPE	P1011111
Primary Talk	**Secondary**					**Untalk**

Status: See Buffered Read

Requirements for execution: See Buffered Read

Unbuffered Read Verify

Type: Disc Read

Purpose: The Unbuffered Read Verify is identical to the Unbuffered Read command. No reduced margin read is done.

Description: See Unbuffered Read.

HP-IB Sequence:

Unbuffered Read Verify Request

ATN	**ATN**			**EOI**		**ATN**
P01ADDRS	P1101100	PPD	00101	UUUU	PPE	P0111111
Primary Listen	**Secondary**		**Opcode**	**Unit**		**Unlisten**

Send Data Request

ATN	**ATN**					**ATN**
P10ADDRS	P1100000	PPD	<-- Data bytes -->		PPE	P1011111
Primary Talk	**Secondary**					**Untalk**

Status: See Unbuffered Read

Requirements for execution: See Unbuffered Read

Cold Load Read

Type: Disc Read

Purpose: The Cold Load Read is a command to read from unit 0, cylinder 0 at a specified head and sector address. This command consists of a seek to cylinder 0 followed by a read operation starting at the specified head and sector. Consecutive sectors are read until the bus controller stops the read.

Description: Following reception of the Read command, parallel poll response is disabled, and the DSJ is cleared. If the Unit can be accessed, the 9121D/S performs a seek to cylinder 0, reads the specified sector into the internal buffer, then re-enables its parallel poll response waiting for the send data secondary. After the Send Data secondary is received, the parallel poll response is disabled and the buffered sector is sent to the bus controller. When the sector has been sent, the controller fills the buffer with the next sector from the disc and then sends it to the bus controller. This process is repeated until one of the termination conditions occurs:

1. If the unit becomes unavailable or a sector cannot be found when the buffer is empty, a byte tagged with EOI is sent.

2. If a CRC error or D bit is encountered, the sector is sent followed by a byte tagged with an EOI.

3. If at any time during the operation the device notices that it has been untalked or that the bus controller has sent a byte, the transfer will be stopped.

Following any of the above terminations, status is updated and the parallel poll response is re-enabled. If there was an error in reading data from the disc, the target address is left pointing to the sector in which the error occurred. Otherwise, the target sector points to the sector following the last sector read from the disc.

The Cold Load Read uses unbuffered HP-IB protocol, although all sector transfers take place through the buffer. Thus, there is a pause in data flow to the HP-IB each time the buffer is refilled from the disc. This pause occurs at the beginning of the read and after every sector is transferred. Depending on when the read is started and the staggering of the sectors (see the Format command), this inter-sector pause may be up to 200 milliseconds long.

HP-IB Sequence:

Cold Load Read Request

ATN	**ATN**			**EOI**		**ATN**
P01ADDRS	P1101000	PPD	00000	HHSSSSSS	PPE	P0111111
Primary Listen	**Secondary**		**Opcode**	**Head/Sector**		**Unlisten**

where: HH - Head address
SSSSSS - Sector address

Send Data Request

ATN	**ATN**			**EOI**		**ATN**
P10ADDRS	P1100000	PPD			PPE	P1011111
Primary Talk	**Secondary**		<-- Data bytes -->			**Untalk**

Status:

No errors
- S1 - 0
- S2 - Type field updated
- DSJ - 0

Unsuccessful Read
- S1 - Error
- S2 - the A, E, and C bits are set if appropriate
- DSJ - 1

Requirements for execution:

a. Unit available,
b. Disc ready,
c. Disc of known format,
d. Valid head and sector number.

Parallel Poll: If less than the specified number of bytes is accepted by the HP-IB Controller, the parallel poll response is assured to be re-enabled upon the reception of the Untalk command by the 9121D/S.

Disc Write Commands

Buffered Write

Type: Disc Write

Purpose: The disc controller takes data transmitted over the HP-IB and stores it in an internal buffer before writing it on the disc. This buffering allows the host system to transmit asynchronously from an arbitrarily slow rate to about 69 Kbytes per second.

Description: Following reception of the write command, the parallel poll response is disabled, and status of the specified unit is checked, and the parallel poll response is re-enabled.

At this time, the Bus Controller should send the Receive Data secondary followed by up to 256 bytes of data. After seeing the Receive Data secondary, the 9121D/S will disable its parallel poll response, and begin placing data bytes in its buffer. The 9121D/S will stop accepting bytes after:

a. it receives a byte tagged with EOI,
b. it has accepted 1 sector (256 bytes).

NOTE

If less than 1 sector is sent the sector will be filled with data in the buffer from previous operations.

The 9121D/S will attempt to write the 256 bytes in the buffer to the target sector. If the write completes successfully the target address is incremented by one sector. If the target sector cannot be found, or a D Bit is encountered, the sector is not written and the target track is not incremented. The parallel poll is re-enabled after the write completes or aborts.

If more than 1 sector is to be written, any number of write commands can be used in succession. The 9121D/S will update the target address automatically. A write will fail if it follows another write which failed, so there is no chance of an error in the middle of a long transfer going unreported. However, error detection will be quickened if a DSJ is used after each write sequence is completed.

HP-IB Sequence:

Buffered Write Request

ATN	ATN			EOI		ATN
P01ADDRS	P1101001	PPD	01000	UUUU	PPE	P0111111
Primary Listen	**Secondary**		**Opcode**	**Unit**		**Unlisten**

Receive Data

ATN	ATN			EOI	ATN
P01ADDRS	P1100000	PPD		PPE	P0111111
Primary Listen	**Secondary**		<- Data bytes ->		**Unlisten**

Status:

No errors
- S1 - 0
- S2 - Unchanged
- DSJ - 0

Unsuccessful Write
- S1 - Error
- S2 - the A, E and C bits are set if appropriate
- DSJ - 1

Requirements for Execution:

a. 2 data bytes in command
b. 0<=UNIT<=3
c. DSJ <> 2
d. Disc present and ready
e. First Status Bit not set
f. Status 1 = Normal completion,
I/O program error, or, Illegal opcode error.
g. Disc not write protected

Parallel Poll: The Parallel Poll response is re-enabled after the operation is completed, normally or abnormally.

Initialize

Type: Disc Write

Purpose: The initialize command is used to set or reset D Bits. It is similar to the buffered write with the following exception:

All D Bits on the target track will be set or reset, before the target sector is written.

The Initialize command is especially useful when used with the Format command to make invisible tracks.

Description: Following reception of the initialize command, parallel poll response is disabled, and the status of the selected unit is checked.

The entire target track is re-formatted, with the D Bit in all sectors set or reset according to the D Bit specified in the opcode byte of the command. This re-formatting has several results:

a. All data on the target track is lost,

b. The sector interleave of the track is changed to type 2 (every other sector),
c. The spiral offset of the target track may no longer be optimal.

After the Initialize request is sent, the command accepts data in a manner identical to the buffered write command. The last data byte received is written into the data field of every sector on the target track (256 times per sector).

NOTE

If track 0 is initialized to set the D bits to 1, and then the Format without overwrite is done, the disc will be unusable. Track 0 must not be spared.

HP-IB Sequence:

Initialize Request

ATN	**ATN**			**EOI**		**ATN**
P01ADDRS	P1101000	PPD	D01011	UUUU	PPE	P0111111
Primary Listen	**Secondary**		**Opcode**	**Unit**		**Unlisten**

Receive Data

ATN	**ATN**			**EOI**		**ATN**
P01ADDRS	P1100000	PPD	<- Data Bytes ->		PPE	P0111111
Primary Listen	**Secondary**					**Unlisten**

Status:

No errors
- S1 - 0
- S2 - Unchanged
- DSJ - 0

Unsuccessful
- S1 - Error
- S2 - the A, E, and C bits are set is appropriate
- DSJ - 1

Requirements for Execution: (See Buffered Write requirement)

Parallel Poll: The parallel poll response is re-enabled after the operation is completed, normally or abnormally.

Format

Type: Disc Write

Purpose: The Format command is a part of the sequence of commands which takes a disc which is unformatted or has the wrong format into a disc with a usable format. The formatting operation also can make tracks marked with the D Bit into invisible tracks.

The Format sequence was designed to allow the disc controller to do as much of the work of formatting as possible, but still allow the host system to set its own criteria for:

a. Bad track detection,
b. Sector interleave,
c. Format data byte.

Description: After receiving the format command, Parallel Poll is disabled, and the status of the specified unit is checked. If the unit can be used, the motor speed is checked. If the speed is not within specification, the Format command will fail with a write protect error. The disc is formatted according to the type, Old Format Override, interleave, and selected data byte as specified in the command data bytes.
If the disc is of a different format than the Format command requests, or the Override Old Format Bit is set, the entire disc will be formatted without invisible tracks.

If the disc is the same type as that requested by the Format command, and the Override Old Format Bit is not set, Flexible Disc Drive will attempt to read from each track before it is formatted and make that track invisible if:

a. The track is already invisible,
b. A sector with a D Bit set is found,
c. The track has no readable sectors.

NOTE

If track 0 is made invisible, the disc will seem as if it has been worn out, i.e., the user alert system (blinking and clicking) will be activated. This means that the disc will be write protected.

The Interleave parameter determines the order in which the sectors occur on a track. Host systems that accept data slower than the disc rate operate more efficiently if the ordering of the sectors is non-sequential. Non-sequential sectors ordering allows for sectors to be arranged on the disc by logical use instead of by physical location.

In general, the Interleave parameter indicates the number of disc revolutions required to send or receive one tracks worth of data. For example, an interleave value of 5 would indicate that the sectors would be arranged on the disc in a manner that would require 5 revolutions to read 1 track. Note: At the present time an Interleave parameter value of 2 (2 revolutions per track) generates the sector sequence with the minimum time required to transfer one track.

HP format also uses the Interleave parameter to determine the inter-track spiral offset. This offset minimizes the effect of track to track seeks by physically arranging sector 15 of one track and sector 0 of the next to make the the track seek time either as short as possible, or transparent (the track seek time is less than the interleave latency time in this case).

NOTE

The 9121D/S resets the physical and logical address to 0,0,0, while the 8290X leaves these pointing to past the end of the media.

HP-IB Sequence:

Format Request

ATN	ATN					
		P				
P01ADDRS	P1101100	P	11000	UUUU		
		D				
Primary Listen	**Secondary**		**Opcode**	**Unit**		
			F0000010			
			Type	**Interleave**		
				EOI		**ATN**
					P	
					P	P0111111
					E	
				Data byte		**Unlisten**

Where: ADDRS - Flexible Disc Drive HP-IB address
F - Override Old Format Bit
Interleave - 1 to 15

NOTE

The data byte must never be 0F5H, 0F6H, or 0F7H.

Status:

No errors
S1 - 0
S2 - Unchanged
DSJ - 0

Unsuccessful
S1 - Error
S2 - the A, E and C bits are set if appropriate
DSJ - 1

Parallel Poll: The parallel poll response is re-enabled after the operation is completed, normally or abnormally.

DISC CHANGE INDICATION

At the beginning of each microfloppy access, the peripheral checks to see if a new disc has been inserted into the current unit's drive. If a new disc is indicated, QSTAT will be 2 and the Power Fail error bit will be set. At the next command at which the format of the disc needs to be known (Describe, Locate and Verify, etc.), the disc will be accessed (if present) to determine its size, and the Describe fields pertaining to these characteristics will be updated.

Commands that can cause the QSTAT of 2 and Power Fail status bit indication are:

```
Locate and Read
Locate and Write
Describe
Initialize Media
Locate and Verify
Spare Block
Initiate Diagnostic
```

RETRIES

There is never any reason to retry a command since the peripheral always does its best to get the data. If an Unrecoverable Data error does occur, you may retry, but the peripheral has already done about 30 retries for you already.

If the Recoverable Data or Media Wear status bits are set, don't retry. The data has been obtained; it just took a retry to get it, or the media is wearing out. The integrity of the data the peripheral passes to the host does not need to be questioned in this case.

TIMEOUTS

The head will be loaded and the motor turned on only before those operations that access the disc. The head will be unloaded if no further microfloppy commands have been given by the host within 1 second of the end of the last operation. The motor will be turned off after 1 minute of microfloppy inactivity.

If a command is given to unit 15 (the controller), the heads are unloaded on the drives. These operations affect the transfer rate because when the heads are re-loaded, the head load time is incurred before any data is transferred.

NOTE

PLEASE REFER TO CS/80 INSTRUCTION SET PROGRAMING MANUAL (5955-3442) FOR THE DETAILS OF THE COMMAND SET AND ITS OPERATION

SUBSET/80 COMMAND TABLE

COMMAND	PAGE
Universal Device Clear	B-4
Amigo Clear	B-4
Cancel	B-4
Channel Independent Clear	B-4
Describe	B-5
Identify	B-6
HP-IB Parity Checking	B-6
Download	B-6
Initialize Media	B-7
Initiate Diagnostic	B-8
Locate and Read	B-9
Locate and Write	B-10
Locate and Verify	B-10
No Op	B-11
Loopback	B-11
Request Status	B-11
Set Address	B-12
Set Format Options	B-12
Set Length	B-13
Set Mask	B-13
Set RPS	B-13
Set Release	B-13
Set Unit	B-13
Set Volume	B-14
Spare Block	B-14

CLEARS

There are three mechanisms available to clear the HP 9122: the HP-IB Universal Clear command, the AMIGO Clear, and the Channel Independent Clear. Depending on which clear is given to the peripheral, all or one of the units will be affected, and the clear can be "HARD" or "SOFT".

Hard Clear

A HARD clear to the microfloppy units (0 or 1) will cause the following events to occur:

1. The heads of the drive are repositioned to track 0
2. The status bits, P1-P10, and QSTAT are cleared (except that if the Diagnostic Result bit is set, only the Power Fail status bit will be cleared. The QSTAT will be 1 for the unit in this case).
3. The status mask is cleared
4. The length is set to all ones
5. The target address is set to zero
6. The format used for initializing will be reset to the default format (256 byte sectors on both sides).

Soft Clear

A SOFT clear is identical to the HARD clear except that the heads of the unit are not moved.

AMIGO CLEAR, UNIVERSAL CLEAR, CHANNEL INDEPENDENT CLEAR TO UNIT 15

Description: All the units (drives 0 and 1 and the controller, unit 15) are cleared. Units 0 and 1 do HARD clears. The unit will be set to 0 after completion of this command.

CHANNEL INDEPENDENT CLEAR TO UNIT 0 OR UNIT 1

Description: The selected unit will do a SOFT clear. No other units are affected.

CANCEL

Description: This command causes a graceful termination of the Initialize Media command, leaving the HP 9122 in the reporting phase. Cancel will not cause an immediate response usually, but eventually it will be seen an acted upon.

The Cancel command supresses message length and message sequence errors.

DESCRIBE

Description: The control fields returned for the HP 9122 are:

```
C1,C2 = installed unit byte. C1 will always be 80H,
        C2 will be 1 or 3, corresponding to 1 or 2
        drives.
C3,C4 = 100, maximum instantaneous transfer rate in
        thousands of bytes per seconds.
C5    = 4 if only one unit (drive) connected or 5 if more than
        one unit is connected.
```

The unit description field will be:

```
U1     = Generic device type 1, floppy
U2-U4  = 091220H, product number
U5-U6  = bytes per block (usually 256)
U7     = 1, number of blocks which can be buffered
U8     = 0, burst mode not recommended
U9-U10= microseconds per sector (16 microseconds
        per byte)
U11-U12= 45 kbytes/s maximum continuous average
         transfer rate (as if it could do interleave
         of 1)  (the actual maximum is 15 Kbytes/s
         for interleave of 2)
13-U14 = 4500,45 seconds read retry time
U15-U16 = 8400,84 seconds maximum access time
   U17 = maximum interleave factor
   U18 = 0, no fixed volumes
   U19 = 1, one removable volume
```

The Volume Description Field is:

```
V1-V3 = address of maximum track usable for data
        storage
   V4 = 1, maximum head address for double-sided, 0
        for single-sided discs
V5-V6 = maximum sector address (assuming that the
        sectors are numbered consecutively starting
        with 0)
V7-V12 = 2463 for HP double-sided with 256 byte
         sectors, 1385 for HP double-sided with 512 byte
         sectors, 769 for HP double-sided with 1024 byte
         sectors,1055 for HP single-sided, 0 for no media
  V13 = current interleave factor or minimum usable
        if the current interleave is unknown
```

The describe fields will reflect the format of the disc in the drive. If no disc is in the drive, V1-V6 will reflect the format of the last disc, but the address field, V7-V12, will be zero. If the disc has been changed since the last disc access, the Describe will take place with the fields reflecting the characteristics of the new disc and the Power Fail bit will be set (and QSTAT = 2).

DOWNLOAD

Description: This command is used to download code into the RAM of the HP 9122, which will then be executed. This command is used for special service routines and diagnostics only.

HP-IB PARITY CHECKING

Description: This command can be used to turn on and off the SRQ from the HP 9122.Parity checking is not supported on the HP 9122.

IDENTIFY

Description: Identify is a special-case HP-IB command used by the host at power-on to identify the devices connected to the bus. The HP 9122 will return 02, 22H.

INITIALIZE MEDIA

Description: Before the actual formatting procedure starts, the rotational speed of the disc is measured. If out of spec, the Initialize Media command will end with a write protect error. Additionally, if the wear monitor counter has reached the topmost wear level, the command will end with a write protect error, along with the media wear status bit.

This command will initialize a disc, one track at a time. The procedure includes writing and verifying a worst case pattern. All necessary sparing is performed at this time. None of the spares present on the disc at the beginning of the format procedure are saved. If a track is truly defective, it will be spared again by this procedure.

None of the spares present on the disc at format time are saved. If a track is truly defective, it will be spared again by the Initialize Media procedure.

Initialize Media Procedure.

There are up to two spare tracks on each side of the double-sided disc. If more tracks need to be spared than provided for by these set-aside tracks, the command will end with a No Spare Available error.

The disc can be formatted with an interleave from 0 to the maximum allowed (the maximum is the number of sectors on a track minus one). An interleave of 0 is the same as an interleave of 1 except that no spiral offset is used. If the interleave parameter passed is greater than the maximum, the maximum will be used.

Periodically during the execution of the Initialize Media command, the HP-IB will be scanned. If a clear or Cancel command is recognized, the Initialize Format command will be terminated with no errors. However, the disc may not be usable (recognizable) as is.

To initialize a disc with a format different from the default HP double-sided one, use the Set Format Options command before the Initialize Media command.

After a successful Initialize Media, the data fields are all set to 0.

Some Possible Status Errors:

35 = Not Ready	No disc in drive
36 = Write Protect	Disc is write protected
34 = No Spares Available	Ran out of spare tracks
55 = Auto Sparing Invoked	At least one track was spared

INITIATE DIAGNOSTIC

Description: This command instructs the HP 9122 to perform its diagnostic routine. This routine is similar to the one performed at power-on.

The TEST LED will go on for the duration of the diagnostic test. If all the test performed complete successfully, the LED will go off. The LED will stay on if one of the test fail.

If the medium has been changed since the last disc access, the Power Fail status bit will be set, with QSTAT = 2, and the diagnostics will be performed.

The individual tests are performed in the following order:

FDC test -- reads/writes to registers
Seek test -- steps the head in and out.

If no disc is in the drive, the test is complete,

otherwise,
Index period test -- measured.

If the disc in the drive is not of a HP double-sided format, then the testing is complete, else if the disc is write protected, then only a read test is performed. A write, read, compare test is performed if the disc is not write protected. All writing is done in non-data areas. No customer data is at risk.

As soon as the first test failure occurs, the rest of the Diagnostic routine is aborted.

If the diagnostic fails, the parameter bytes P1 through P6 will contain one of the following error codes:

meaning	P1	P2	P3	P4
FDC failure --	00	00	00	01
Seek test failure --	00	00	00	02
Index test failure --	A---	A	00	03
Write test failure --	XX	B	00	04
Read test failure, hd 0	xx	B	00	06

```
Read test failure, hd 1  xx  B  00 07
Read compare error, hd 0 C---C  00 08
Read compare error, hd 1 C---C  00 09
Read test failure, hd 0  xx  B  00 10
Read test failure, hd 1  xx  B  00 11
```

where A * 9.1875 microseconds + 90 ms is the index period,

B reflects the FDC status as follows:

```
1xxx xxxx -- no disc in drive
x1xx xxxx -- write protected
xxx1 xxxx -- ID read error
xxxx 1xxx -- CRC error
xxxx x1xx -- hardware failure,
```

C is the address of the bad data.

X means there is no meaningful data in that field.

P5, P6 will always be set to the unit that failed. As soon as the first test failure occurs, the rest of the Diagnostic routine is aborted.

LOCATE AND READ

Description: This command finds the data at the target address and transmits it to the host.

If the present location of the read/write head is not at the target track, the head is stepped to the proper cylinder and an ID is read to verify the location of the head. If any error occurs up to this point, the proper status bits are set up, QSTAT is set to 1, and the reporting phase is entered, skipping the execution phase.

Once the proper track is located, the execution message is requested, unless the current length is 0, in which case no execution message is requested.

Data is read from the disc one sector at a time. After reading a sector data is passed to the host. The cycle of reading a sector of data and then passing it to the host over the HP-IB will continue until the number of bytes as set by the current length parameter is passed.

If the correct sector for a read cannot be found a restore to track 0 followed by a seek for the correct track is performed. Re-seeking will be performed up to five times.

If the data is read with a CRC error, up to two retries will be performed before the read ends in error. In all cases, all the data requested as defined by the length parameter will be passed to the host.

Some Possible Status Errors:

35 = Not Ready	No disc in drive
33 = Uninitialized Media	Blank or unreadable disc
44 = End of Volume	Reads extend to end of disc
41 = Unrecoverable Date	Seek fails or data error
40 = Unrecov. Data Overflow	More than one error 41
59 = Recoverable Data	Seek or read succeeds after retries
52 = Latency Induced	"
57 = Recov. Data Overflow	More than one error 59

LOCATE AND VERIFY

Description: This command instructs the device to perform an internal verification of a section of data to ensure that it can be read.

This command is basically the same as a Locate and Read except that 1) the data is not made available to the host, 2) retries on reading the data are not performed.

Some Possible Status Errors:

35 = Not Ready	No disc in drive
33 = Uninitialized Media	Unformatted disc
44 = End of Volume	Verify went to end of disc
41 = Unrecoverable Data	Seek fails or data error
40 = Unrec. Data Overflow	more than one error 41

LOCATE AND WRITE

Description: This command transfers data from the host to the microfloppy, starting at the target address.

If the present location of the read/write head is not at the target track, the head is stepped to the proper cylinder and an ID is read to verify the location of the head. If any error occurs up to this point, the proper status bits are set up, QSTAT is set to 1, and the reporting phase is entered, skipping the execution phase.

Once the proper track is located, the execution message is requested, unless the current length is 0, in which case no execution message is requested.

The actual writing of the data occurs once the sector buffer is filled with data from the host. This cycle of filling the buffer and then transferring the data to the microfloppy will continue until the number of bytes as specified in the length parameter is written on the microfloppy. If only a portion of a sector's worth of data is passed by the host, the remainder of the sector is filled with arbitrary data.

Some Possible Status Errors:

35 = Not Ready	No disc in drive
33 = Uninitialized Media	Unformatted disc present
36 = Write Protect	Disc is write protected
44 = End of Volume	Reads extend to end of disc
41 = Unrecoverable Date	Seek fails or data error
40 = Unrecov. Data Overflow	More than one error 41
59 = Recoverable Data	Seek succeeds after retries
52 = Latency Induced	"
57 = Recov. Data Overflow	More than one error 59

LOOPBACK

Description: This command initiates a sequence to test channel integrity.

NO OP

Description: This command is ignored.

REQUEST STATUS

Description: This command instructs the HP 9122 to return the status report.

There are certain status bits that can be set by all the commands. These are:

5 = Illegal Opcode
9 = Illegal Parameter
10 = Message Sequence
12 = Message Length
19 = Controller Fault

22 = Unit Fault
30 = Power Fail.

The Power Fail status may indicate that a new disc has been inserted into the drive.

If the media in a drive has been used for an extended period of time, the Media Wear status bit, number 51, will be set. This bit indicates that the data on the disc should be backed up, and then the disc should be discarded.

Concurrent with the setting of the Media Wear bit, the media alert signal of repeatedly loading and unloading the heads on the drive with the worn disc in it will begin. Additional use of the disc after this state has been reached is possible (though not recommended). After more use, not only will the Media Wear bit be set, but write operations (Initialize Media, Locate and Write) will fail, with the Write Protect bit being set. The Media Wear bit will be set once for every 2 minutes or so of disc usage.

SET ADDRESS

Description: This command sets the value of the single vector target address.

The target address is incremented after each read, whether it was successful or not and will point to the block after the one just read. If a Locate and Write fails, the target address is not incremented past the block that failed.

Some Possible Status Errors:

7 = Address Bounds	Address passed is too large

SET FORMAT OPTIONS

Description: This command will set up the HP 9122 to initialize discs in a format different than the default one.

The execution message contains a single option byte that selects which of the format options to use when excuting a subsequent Initialize Media command.

Byte Meaning

0	product default, 256 byte sectors, double-sided HP format
1	same as 0, 256 byte sectors, double-sided HP format
2	512 byte sectors, HP double-sided format
3	1024 byte sectors, HP double-sided format
4	HP single-sided format (HP 9121 compatible)
FFH	this is ignore (signifies that options are available in the HP 9122)

After power-up or a clear, the defult format is again set up and used by subsequent Initialize Media commands.

SET LENGTH

Description: This command defines the number of bytes in a data transfer.

A length of all ones will specify the entire disc.

SET STATUS MASK

Description: This command allows masking of error conditions reported by the Request Status command. The 8 bytes following the command opcode indicate which error bits are to be masked. At power-on, no bits are masked.

The masked error bits will not be reported by either Request Status or QSTAT. If an error bit is not masked, it reports a hard error (QSTAT=1) when set. The only exception to this is the Power Fail error bit. This bit reports a power-on status (QSTAT=2) when set.

Some Possible Status Errors:

8 = Parameter Bounds	Trying to mask an unmaskable bit

SET RELEASE

Description: This is a NO OP to the HP 9122.

SET RPS

Description: This sets time-to-target and window-size time intervals for RPS data transfers. The HP 9122 will treat this command as a No Op. No RPS is enabled.

SET UNIT

Description: This command is used to specify a specific unit within the HP 9122. The controller is always unit 15. A HP 9122 may have 1 or 2 drives, at units 0 and 1.

Some Possible Status Errors:

6 = Module Addressing Illegal unit number

SET VOLUME

Description: Use this command to specify the desired storage volume of a specified mass storage device.

In the case of the HP 9122, each unit has only one volume, so the only valid volume number is 0.

Some Possible Status Errors:

6 = Module Addressing Volume <> 0

SPARE BLOCK

Description: This command tries to instruct the HP 9122 to spare out the track indicated by the target address.

Some Possible Status Errors:

34 = No spares available.

No autosparing is done during normal use; sparing is only done during an Initialize Media command. Any data that can't be read will cause an Unrecoverable Data error. At no time will the Marginal Data status bit be set (as that would indicate to the host that a Spare Block command should be given).

HEWLETT PACKARD

MANUAL UPDATE 5957-6560

UPDATE FOR THE 3 1/2-INCH FLEXIBLE DISC DRIVE SERVICE MANUAL (PART NUMBER 09121-90030)

This update is for the tabbed section of the manual labeled 9133D. The update covers information on the HP 9133/34 H and L products.

To update your manual, remove the old tab and text from the manual and replace it with this update.

The updated section contains a revision date below the page numbers.

Computer Museum

General Information

CHAPTER 1

Introduction

The HP 9133D,H and L products (Figure 1-1) are random access data storage devices containing a 5 1/4-inch Winchester drive providing 15, 20 and 40 Mbytes of storage capacity respectively. The HP 9133 also has a 3 1/2-inch Flexible Disc Drive with a maximum storage capacity of 710 Kbytes.

The HP 9133D,H and L products use the SUBSET 80 command set.

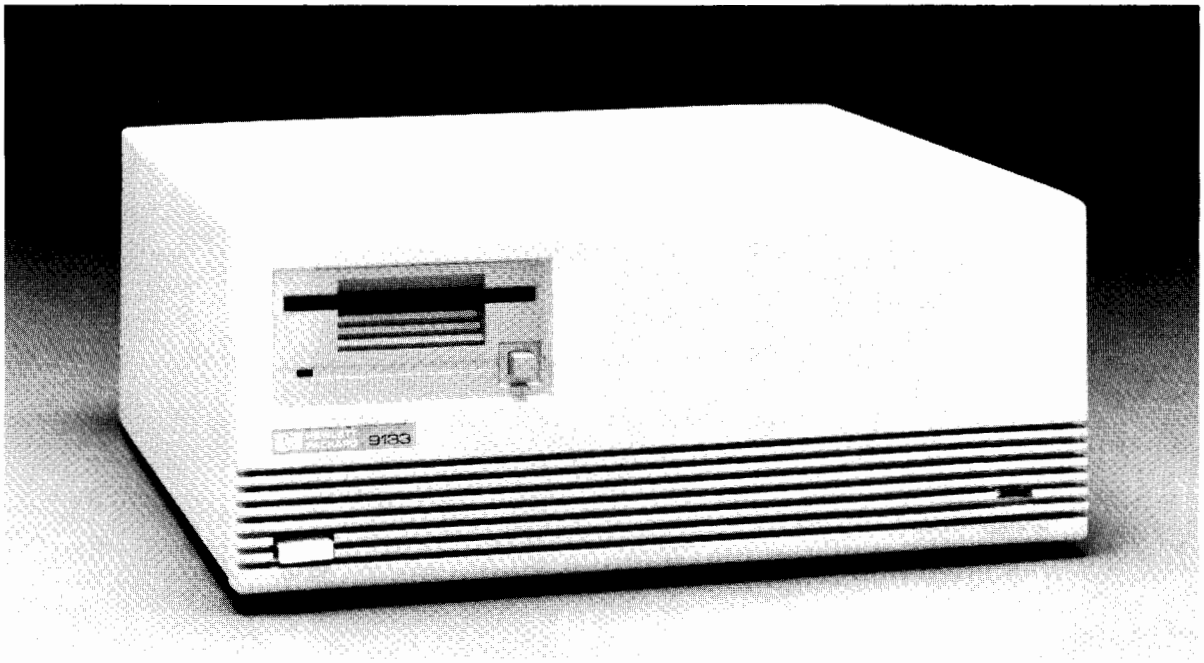

Figure 1-1. HP 9133D,H and L Disc Memory.

Part Number 5957-6560

Specifications

PERFORMANCE CHARACTERISTICS

	15 Mbyte(D) Winchester	20 Mbyte(H) Winchester
Maximum Formatted Capacity:		
HP 150		
Bytes Per Unit	14.8 MB	20.0 MB
Bytes per Sector	256	256
Sectors per Track	32	32
Series 200 (BASIC and Pascal)		
Bytes Per Unit	14.8 MB	20.0 MB
Bytes Per Sector	256	256
Sectors per Track	32	32
Series 200 (HPUX)		
Bytes Per Unit	16.6 MB	22.56 MB
Bytes Per Sector	1024	1024
Sectors per Track	9	9
Tracks per Surface	303	612
Surfaces per Disc	2	4
Tracks per inch	135	580
Recording Format	MFM	MFM
Max Sustained Transfer Rate*	145 KB/s	140 KB/s
Average Access Time	85 ms	85 ms
Maximum Access Time	205 ms	205 ms
Rotational Speed	3600 rpm	3600 rpm

* Mainframe and interleave dependent.

PERFORMANCE CHARACTERISTICS (Continued)

	40 Mbyte(L) Winchester	Double-Sided 3 1/2-inch Disc Drive
Maximum Formatted Capacity:		
HP 150		
Bytes Per Unit	40.02 MB	710 Kbytes
Bytes per Sector	256	512
Sectors per Track	32	9
Series 200 (BASIC and Pascal)		
Bytes Per Unit	40.02 MB	630 Kbytes
Bytes Per Sector	256	256
Sectors per Track	32	16
Series 200 (HPUX)		
Bytes Per Unit	45.02 MB	630 Kbytes
Bytes Per Sector	1024	256
Sectors per Track	9	16
Tracks per Surface	977	80
Surfaces per Disc	5	2
Tracks per inch	960	135
Recording Format	MFM	MFM
Max Sustained Transfer Rate*	140 KB/s	17 Kb/s
Average Access Time	40 ms	497 ms
Maximum Access Time	80 ms	1.742 s
Rotational Speed	3600 rpm	600 rpm

* Mainframe and interleave dependent.

ENVIRONMENTAL RANGES

The following chart shows the acceptable environment for the HP 9133 and HP 9134 series products.

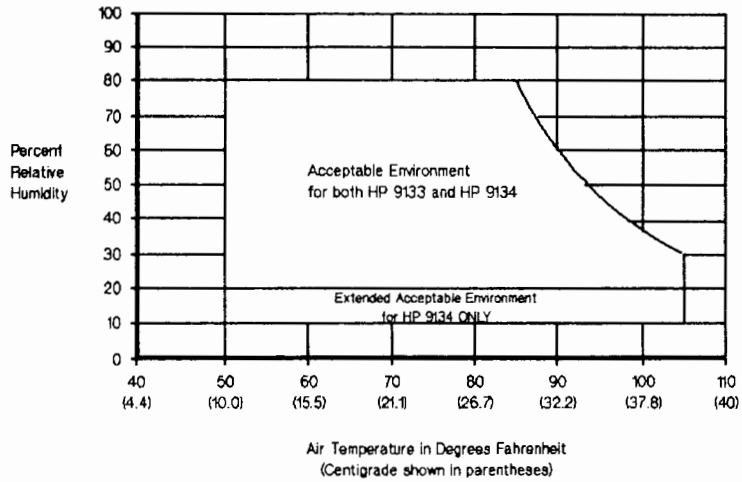

9133D,H,L

Altitude	
Operating	0 to 4572m (0 to 15000 ft)
Non-Operating	-304 to 1524m (-1000 to 50000 ft)

PHYSICAL CHARACTERISTICS

Size		
Height		132 mm (4.9 in)
Width		325 mm (12.8 in)
Depth		285 mm (11.2 in)
Weight		
Net	(L)	10.5 kg (23.0 lbs)
	(H)	9.1 kg (20.0 lbs)
	(D)	10.0 kg (22.0 lbs)
Shipping	(L)	13.5 kg (32.0 lbs)
	(H)	13.2 kg (29.0 lbs)
	(D)	16.8 kg (37.0 lbs)

POWER REQUIREMENTS

Voltage (selected by rear panel switch)	86-127VAC 195-253VAC
Frequency	48-66 Hz
Power	125W

Equipment Supplied

The following equipment is supplied with each HP 9133D,H and L product.

Description	Quantity	HP Part Number
AC Power Cord	1	Dependent on location
Operator's Manual	1	09133-90070

CAUTION

The HP 9133D,H and L are precision instruments. Mechanical shock can misalign the READ/WRITE HEAD, resulting in READ ERRORS and/or DAMAGED DISCS whether the disc is operating or not.

Cleaning the Case

Refer to the operators manual supplied with the unit for complete instructions on cleaning procedures.

CAUTION

Chemical spray-on cleaners used for appliances and other household and industrial applications may damage the case finish. Do not use detergents that contain ammonia, benzenes, chlorides, or abrasives.

Installation

CHAPTER 2

Introduction

Refer to the Installation chapter of the 9133 V and XV section of this manual for Installation information. Following is additional information which applies to the HP 9133D,H and L products.

Controls and Indicators

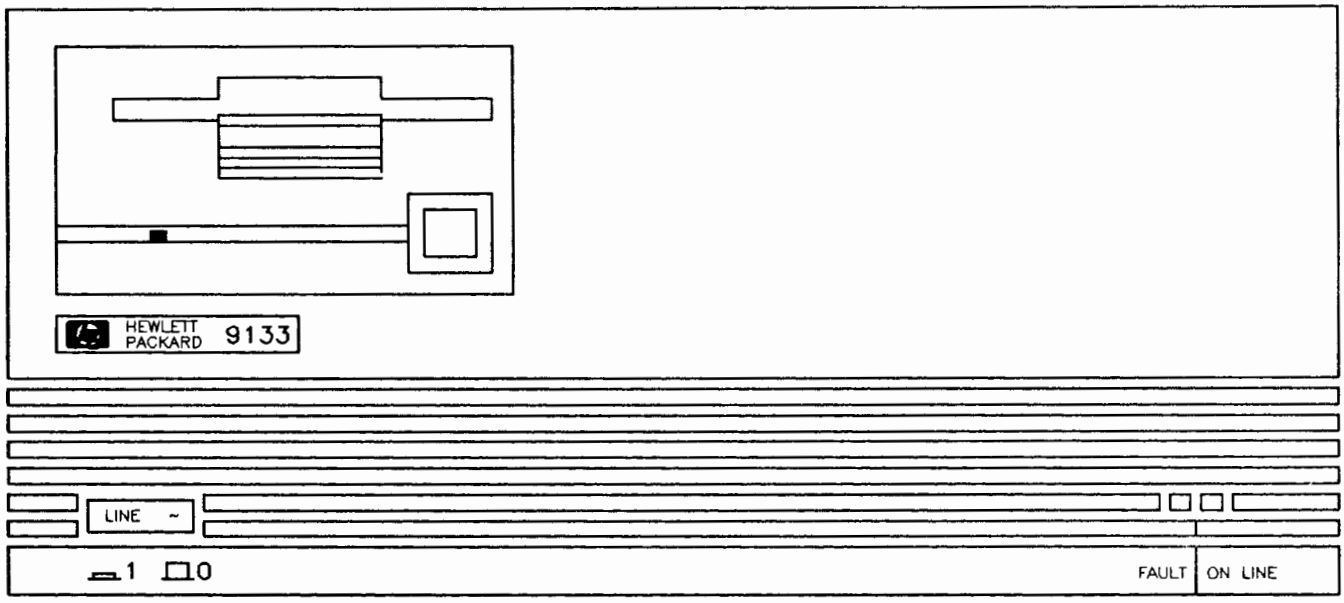

Figure 2-1. Front panel controls and indicators.

Figure 2-1 above shows the controls and indicators available on the front pannel of the HP 9133/34D,H and L. Figure 2-2 shows the location of switches which are used to configure the units.

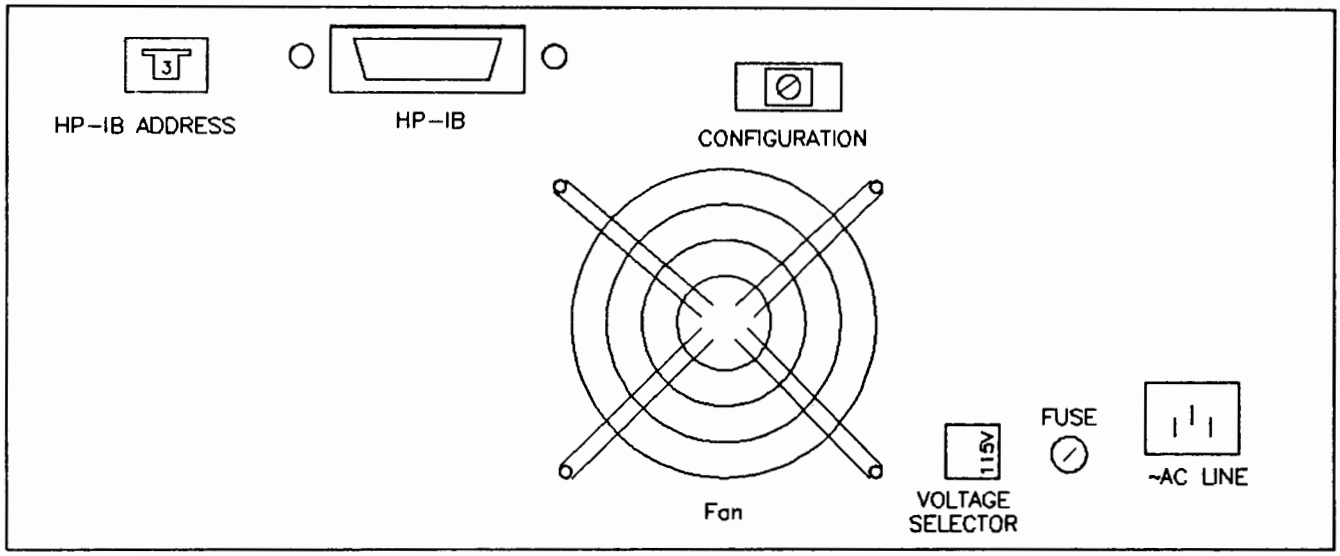

Figure 2-2. HP 9133D,H and L rear panel.

Configuration

Volume Configuration (for series 200 systems only)

The HP 9133D,H and L hard discs can be divided into multiple volumes of different sizes. The following charts (Figures 2-3, 2-4 and 2-5), show the different selections available. The configuration setting refers to the setting of the configuration switch on the rear of the unit. See Figure 2-6 for internal unit configuration.

Config. Setting	Number of Volumes	Size of Volumes 256 bytes/sector	1024 bytes/sector
0	One	14.84 Mbyte/volume	16.64 Mbyte/volume
1	One	14.84 Mbyte/volume	16.64 Mbyte/volume
2	Two	7.37 Mbyte/volume	8.23 Mbyte/volume
3	Three	4.91 Mbyte/volume	5.47 Mbyte/volume
4	Four	3.64 Mbyte/volume	4.03 Mbyte/volume
5	One	12.29 Mbyte/volume	13.76 Mbyte/volume
	One	2.51 Mbyte/volume	2.76 Mbyte/volume
6	Six	2.41 Mbyte/volume	2.65 Mbyte/volume
7	One	9.83 Mbyte/volume	11.00 Mbyte/volume
	Two	2.46 Mbyte/volume	2.70 Mbyte/volume
8	Eight	1.77 Mbyte/volume	1.93 Mbyte/volume
9	One	7.32 Mbyte/volume	8.18 Mbyte/volume
	Three	2.46 Mbyte/volume	2.70 Mbyte/volume

Figure 2-3. Volume configuration settings (9133 D).

Config. Setting	Number of Volumes	Size of Volumes 256 bytes/sector	1024 bytes/sector
0	One	19.92 Mbyte/volume	22.33 Mbyte/volume
1	One	19.92 Mbyte/volume	22.33 Mbyte/volume
2	Two	9.92 Mbyte/volume	11.09 Mbyte/volume
3	Three	6.61 Mbyte/volume	7.37 Mbyte/volume
4	Four	4.49 Mbyte/volume	5.49 Mbyte/volume
5	Five	3.93 Mbyte/volume	4.34 Mbyte/volume
6	Six	3.27 Mbyte/volume	3.61 Mbyte/volume
7	Seven	2.81 Mbyte/volume	3.09 Mbyte/volume
8	Eight	2.45 Mbyte/volume	2.69 Mbyte/volume
9	One	19.92 Mbyte/volume	22.33 Mbyte/volume

Figure 2-4. Volume configuration settings (9133 H).

Config. Setting	Number of Volumes	Size of Volumes 256 bytes/sector	1024 bytes/sector
0	One	39.85 Mbyte/volume	44.74 Mbyte/volume
1	One	39.85 Mbyte/volume	44.74 Mbyte/volume
2	Two	19.90 Mbyte/volume	22.30 Mbyte/volume
3	Three	13.23 Mbyte/volume	14.79 Mbyte/volume
4	Four	9.91 Mbyte/volume	11.06 Mbyte/volume
5	Five	7.90 Mbyte/volume	8.80 Mbyte/volume
6	Six	6.59 Mbyte/volume	7.32 Mbyte/volume
7	Seven	5.65 Mbyte/volume	6.26 Mbyte/volume
8	Eight	4.91 Mbyte/volume	5.44 Mbyte/volume
9	drive split into two units, each of one volume		
	One	19.90 Mbyte/Volume	22.30 Mbytes/Volume
	One	19.90 Mbyte/Volume	22.30 Mbytes/Volume

Figure 2-5. Volume configuration settings (9133 L).

NOTE

For 9133L, 40 Megabyte Drive:

Configuration switch = 9 (2 units)

	Unit 0	Unit 1	Unit 2
HP-IB 0-7	hard disc	hard disc	flexible disc
HP-IB 8,9	flexible disc	hard disc	hard disc

Unit Configuration

The following figure shows the proper jumper settings for the type of hard disc used.

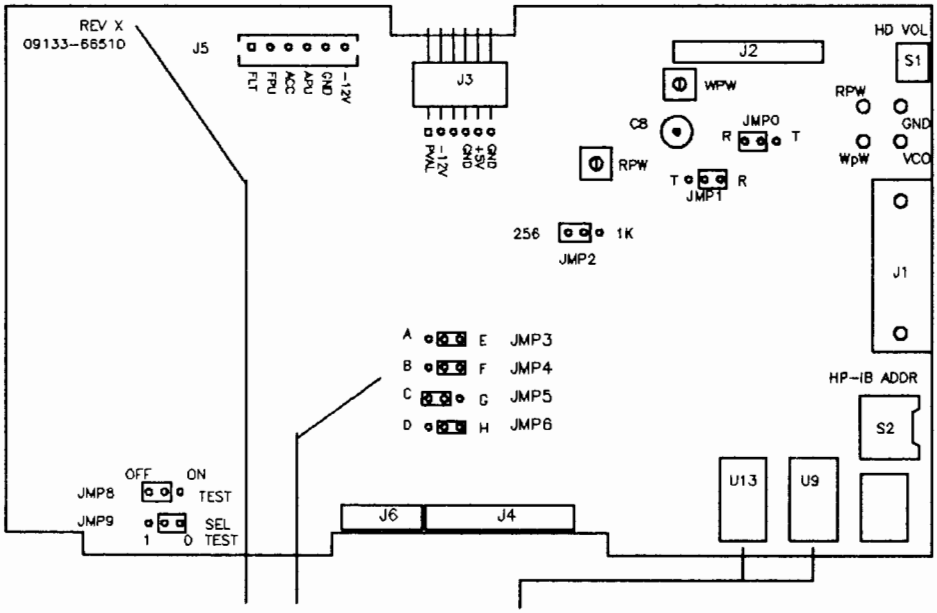

Product	S/N Prefix	Rev	JMP3–JMP6	Required Firmware
9133D	2419A/2511A	B	EFCH	Any 09133-8910X/-8920X
9133D	2419A/2511A	C	EFCD	09133-89105/-89205 and above
9133D	2513A and above	B	ABCH	09133-89105/-89205 and above
9133D	2513A and above	C	ABCD	09133-89105/-89205 and above
9134D	2425A	B	EFGH	Any 09133-8910X/-8920X
9134D	2425A	C	EFGD	09133-89105/-89205 and above
9134D	2514A and above	B	ABGH	09133-89105/-89205 and above
9134D	2514A and above	C	ABGD	09133-89105/-89205 and above
9133H	ALL	B	AFCH	09133-89105/-89205 and above
9133H	ALL	C	AFCD	09133-89105/-89205 and above
9134H	ALL	B	AFGH	09133-89105/-89205 and above
9134H	ALL	C	AFGD	09133-89105/-89205 and above
9133L	ALL	B	EBCH	09133-89108/-89208 and above
9133L	ALL	C	EBCD	09133-89108/-89208 and above
9134L	ALL	B	EBGH	09133-89108/-89208 and above
9134L	ALL	C	EBGD	09133-89108/-89208 and above

NOTE: JMP2 is shown in the position for a standard product.
Option 001 will have JMP2 in the 1K position.

Figure 2-6. Controller board configuration.

Fuses

The AC line fuse used in the HP 9133D,H and L products is for both 115 and 230Vac.

Interface Information

CHAPTER 3

Introduction

Refer to the HP 9133 V and XV section of this manual for interface information. Following is information which applies to the HP 9133D,H and L.

Setting the HP-IB Address

Figure 3-1 shows the location of the HP-IB address switch. This is a thumbwheel switch with numbers 0 through 9. To select the proper address, turn the thumbwheel untill the number you want appears in the window.

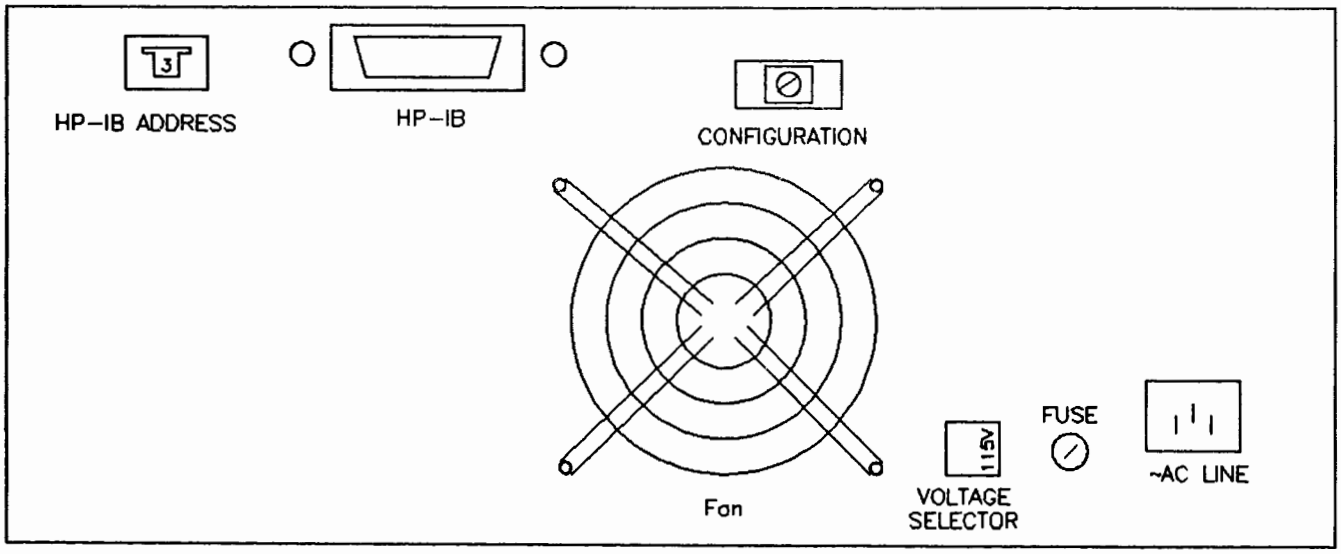

Figure 3-1. HP 9133D,H and L rear panel.

Troubleshooting

CHAPTER 4

Repair Philosophy

The 5 1/4-inch Winchester disc drive assembly is serviced on the exchange program. This includes the drive, and the drive electronics PCA. The 20 and 40 Mbyte drives are exchanged as complete assemblies.

The selftest procedures are given to help isolate problems in the field.

Controller assembly detailed information is not presented.

Exchange Assemblies

PART NUMBER	DESCRIPTION
3 1/2-inch Flexible Disc Drive	-- 09114-69511
40 Mbyte Winchester	-- 09133-69108
20 Mbyte Winchester	-- 09133-69106
15 Mbyte Winchester	-- 09133-69104
Winchester Drive Electronics	-- 09133-69105
Controller Board	-- 09133-69520

Non-Exchange Assemblies

Fan Assembly	-- 09133-68501
3 1/2-inch Disc Cntl Cable	-- 09133-61622
Winchester Disc Cntl Cable	-- 09133-61623
Winchester Disc R/W Cable	-- 09133-61624
Power Supply	-- 09133-67120
Fuse 3A 250V	-- 2110-0003

Selftest

HP 9133D,H and L SELFTESTS

The selftest routines can be initiated in the following 3 ways:

1. **At Power-On**:A selftest of the processor, ROM, HP-IB chip, microprocessor RAM, and buffer RAM is performed. Read/Write tests are then performed on both drives, followed by spindle speed and ECC chip tests. (A disc must be inserted to test the 3 1/2-inch drive.)

2. **Host Computer Initiated**:The Diagnostic command from the host initiates the selftest routine that is performed at power-on.

3. **Switch/Jumper Selected:**The Test Jumper (JMP8) starts the test that is selected by the 4-bit HP-IB Address Switch and Select Test Jumper (JMP9). If JMP8 is left in the on position (0), the test will be repeated. When JMP8 is taken out of the test position, the unit finishes the selected test, goes through the power-on sequence, and is then ready for HP-IB commands. Use Figure 4-3 for location of JMP8 and JMP9.

When a test is performed, the LED is first blinked once (to show that the LED works). If the test is successful, the LED blinks 5 times. If the test fails, the LED stays on for 5 seconds, and then goes off.

SELECTABLE SELFTESTS

NOTE

The RAM test (Test 0) will clear all RAM-loaded parameters, some of which are needed for other tests. Once the RAM test is performed, the RAM must be refreshed by powering the unit off, then on again in order to perform any of the other tests. The RAM test is repeatable without refreshing the RAM.

Tests other than the RAM Test can be selected randomly with the power on.

SELFTEST PROCEDURE

1. Select the desired test. Use the Selfest table in Figure 4-1 and the Test Description table in Figure 4-2.

2. Observe the LED. The unit will do all or part of the power-on selftest and will then start the selected test. When the test is completed, the selftest LED should blink 5 times. If it doesn't, the test failed.

3. Repeat steps 1 and 2 for any additional tests. Refresh the RAM (see the above note) if the RAM test was performed and a test OTHER THAN the RAM test is desired.

HP-IB ADDRESS SWITCH (S2)	SELECT TEST JUMPER (JMP9)	SELECTED TEST NUMBER
0	0	0
1	0	1
2	0	2
3	0	3
4	0	4
5	0	5
6	0	6
7	0	7
0	1	8
1	1	9
2	1	10
3	1	11
4	1	12
5	1	13
6	1	14
7	1	15

Figure 4-1. Selftest table.

SELFTEST SELECTION

LED Indications

Start 1. LED ON 4 seconds
2. LED OFF 0.5 seconds
3. LED ON during test

	TEST PASSES	TEST FAILS
4.	LED ON/OFF 5 times	LED stays ON.

NOTE

A disc must be in the drive to perform tests 4,6,8,10, and 12 (HP 9133 series only). Ensure that the disc is an unprotected and initialized scratch disc.

TEST DESCRIPTION

TEST	DURATION (s)	DESCRIPTION
0 RAM	35	All possible patterns are written in all locations of both RAMS.
1 ROM	10	A checksum calculation is performed.

2	HP-IB	10	Two of the registers on the HP-IB chip are written to and their contents verified.
3	FDC chip	10	Two of the registers on the FDC chip are written to and their contents verified.
4	Floppy Seek	10	Commands are given to the FDC to move the head on and off track 0. The track 0 indicator is checked to see that movement occurred.
5	Winchester Seek	10	Seek commands step the Winchester on and off cylinder 0 in order to test the track 0 indicator.
6	Floppy Speed	10	The head is stepped to track 35 and loaded. The period of the index pulse is measured and compared against the specification. No test is performed if there is no disc in the drive.
7	Winchester Speed	10	The spindle speed of the drive is checked and compared with the allowed range.
8	Floppy Write Verify	85	Every sector on the disc is written and the data is verified. All user data on the disc is lost.
9	Winchester Write Verify	25	All sectors on the selftest cylinder are written and read. Each byte including the ECC is checked. Error correction is also checked. No user data is affected.
10	Floppy Verify	45	All sectors in the data area of the disc are checked for CRC errors. No user data is affected.
11	Winch. Verify	330	All sectors in the data area of the disc are checked for CRC errors. No user data is affected.
12	Floppy Format	80	The disc is re-initialized with a 011 data pattern.
13	HDC Check	10	All read/write registers on the HDC chip are checked. HDC = Hard Disc Controller.
14	WD1100 Check	10	Writes data pattern to all registers with all combinations and verifies the data. Rev B controllers only.
15	WD1100 Buffer RAM	10	Tests the WD data buffer RAM (Rev B controllers only)

Figure 4-2. Test description table.

ADDITIONAL HINTS

If the unit does not respond to commands after power-on, the fault LED can be used to locate a failing section of the PCA. The LED will respond in one of the following ways:

- LED blinks off once every 6 seconds	ROM checksum is wrong
- LED blinks off 2 times/6 seconds	Processor ram is bad
- LED blinks off 3 times/6 seconds	Buffer ram is bad
- LED blinks off 4 times/6 seconds	Configuration jumpers A through H set wrong
- LED blinks off 5 times/6 seconds	8291 is bad
- LED on 6 seconds blinks off 6 times	6809 is bad

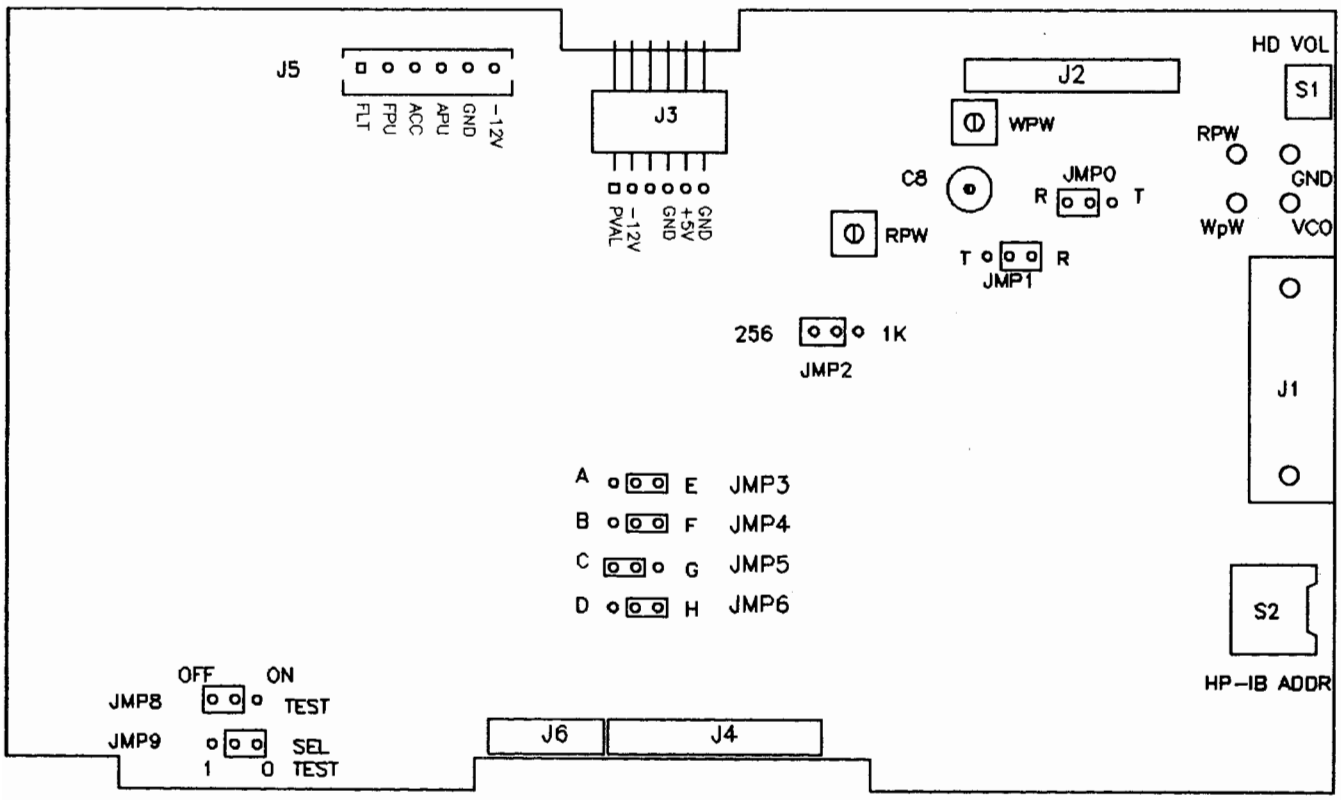

Figure 4-3. Controller jumper location.

Assembly Access

CHAPTER 5

Introduction

Computer Museum

Refer to the 9133 V and XV section of this manual for Assembly Access information.

The following is additional information which pertains to the HP 9133D,H and L.

Controller PCA Removal

To remove the controller board proceed as follows: (The procedure below assumes that you are facing the front of the unit.)

1. Detach cables J2 thru J6.
2. Remove the 3 mounting screws from the left side of the board.
3. Remove the HP-IB connector nuts from the rear of the chassis.
4. Lift the board clear of the chassis.
5. During reassembly, note that the board slides into lanced board guides on the right side of the chassis.

HP 9133H and L Winchester Disc Drive Removal

The HP 9133H and L have a different mounting bracket for the Winchester drive assembly. Following is a list of part numbers that are associated with the bracket and drive. Figure 5-1 shows the bracket, drive and ground strap.

Bracket	09133-01203
Bracket screws	2360-0454
Ground strap	09133-61620 (H only)
Ground strap screws	
to bracket	0515-1085
to chassis	2360-0113

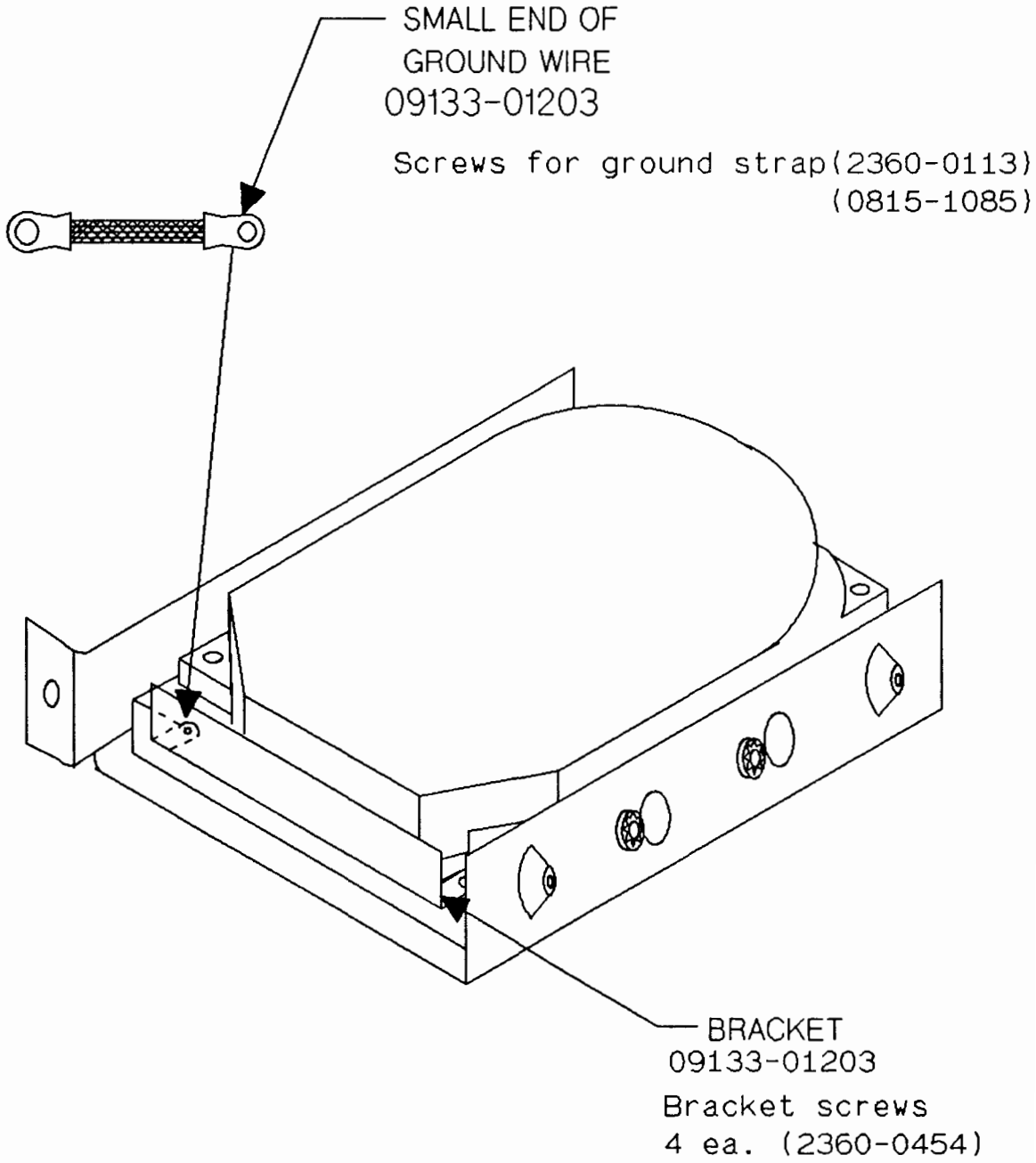

Figure 5-1. 9133H and L Winchester mounting bracket.

9133D,H and L PARTS LIST

LEVEL	REFERENCE DESIGNATOR	PART NUMBER	DESCRIPTION
1	A1	09133-69520	CONTROLLER PCA
.2	C8	0121-0552	C-V 7-60PF VAC
.2	C1-7,10-22,25,26, C28-30	0160-4571	C-F .1UF + 80
.2	C31	0160-4803	C-F 68PF 5% 100V
.2	C32	0160-4807	C-F 33PF 5%100V
.2	C37	0160-4809	C-F 390PF 5%
.2	C35,36	0160-4832	C-F .01UF 10%
.2	C38	0160-4833	C-F .022UF 10%
.2	C9,23	0160-4835	C-F .1UF 10% 50V
.2	C39	0160-5861	C-F 100 PF 1%
.2	C24	0180-0291	C-F 1UF 35V 10%
.2	C27	0180-1746	C-F 15UF 20V
.2	R14	0683-1015	R-F 100 OHM .05
.2	R13,15,16	0683-1035	R-F 10K .05 1/4W
.2	R5,6,7,22	0683-3615	R-F 360 OHM .5
.2	R9	0683-4725	R-F 4.7K .05
.2	R8	0698-3438	R-F 147 1% .125W
.2	R21,23	0698-3700	R-F .125W 715 1%
.2	R18	0757-0161	R-F 604 OHM 1%
.2	R17	0757-0274	R-F 1.21K 1%
.2	R1,3,20	0757-0280	R-F 1K 1% .125W
.2	R19	0757-0400	R-F 90.9OHM .01
.2	R11,12	0757-0437	R-F 4.75K 1%
.2	U9	09133-89105	PROM-1
.2	U13	09133-89205	PROM-2
.2	U29	1200-0817	SOCKET 40 PIN
.2	U9,13	1200-0861	SKT-IC 28-CONT
.2	J1	1251-7651	CN24 M AMP CHAMP
.2	J5	1251-8089	CN 6.100 ST HDR
.2	J6	1251-8681	20 PIN CONNECTOR
.2	J2	1251-8682	CN 26.1 SQ POST
.2	J4	1251-8683	CONNECTOR,34 PIN
.2	JMP1-JMP9	1252-0058	CN3.1 SQ POST
.2	JMP1-JMP9	1258-0141	JUMPER-REM
.2	RP1	1810-0083	NTWK-R 13X1K DIP
.2	RP3	1810-0182	NTWK-R24XMULTDIP
.2	RP2	1810-0235	NTWK-R15X2.2KDIP
.2	RP4	1810-0286	NTWK-R 15X10KDIP
.2	U57	1813-0067	XTAL-CLK-OSC
.2	U11	1813-0194	XTAL-CLK-OSC
.2	U55	1813-0346	DLAY LINE 60NSEC
.2	U4,17	1818-1611	IC-STATIC RAM
.2	U5	1820-0471	IC-SN7406N
.2	U37,58,59	1820-0621	TTL BUFF 7438N
.2	U63	1820-0693	IC SN74S74

.2	U19,23,49,53	1820-1112	IC SN74LS74AN
.2	U47,51	1820-1144	IC 74LS02
.2	U46	1820-1196	IC SN74LS174N
.2	U21,26,35,50	1820-1197	IC SN74LS00N
.2	U27,39	1820-1199	IC 74LS04
.2	U31,32,44	1820-1201	IC SN74LS08N
.2	U54	1820-1202	IC 74LS10N
.2	U24,43,25,34,45,48	1820-1208	IC 74LS32
.2	U38	1820-1216	IC SN74LS138
.2	U18	1820-1281	IC SN74LS139N
.2	U56	1820-1285	IC SN74LS54N
.2	U1,40	1820-1416	IC SN74LS14N
.2	U20,22	1820-1433	IC SN74LS164N
.2	U28	1820-1568	IC SN74LS125AN
.2	U30,41	1820-1730	IC SN74LS273N
.2	U61	1820-1782	IC 26S02
.2	U7,33,42	1820-2024	IC SN74LS244
.2	U8	1820-2075	1C SN74LS245N
.2	U15,16	1820-2096	IC SN74LS393N
.2	U62	1820-2203	IC AM26LS32PC
.2	U14	1820-2536	IC SN74LS352N
.2	U6	1820-2549	IC 8291AP
.2	U12	1820-2624	IC 68B09
.2	U64	1820-2749	IC AM26LS31PC
.2	U29	1820-3168	IC WD1010
.2	U52	1820-3318	IC SN74ALS273N
.2	U2	1820-3431	IC DS75160AN
.2	U3	1820-3513	IC DS75161AN
.2	U10	1820-3659	WD-2793-02 FDC
.2	U60	1820-3705	DP8460N-4
.2	CR1	1901-0050	SWITCHING DIODE
.2	R2,4	2100-3210	TRIMMER RESISTOR 10K 1%
.2	R10	2100-3874	VARIABLE RESISTOR 5K 10%
.2		2200-0107	SCREW 4-40
.2	S1	3100-1662	10 POSITION SWITCH
.2	S2	3100-1951	THUMBWHEEL SWITSH -10

FUSES

1		2110-0003	FUSE-3AMPS NB

EXCHANGE ASSEMBLIES

	09114-69511	3 1/2-inch Flexible Disc Drive
	09133-69108	40 Mbyte WINCHESTER
	09133-69106	20 Mbyte WINCHESTER
	09133-69104	15 Mbyte WINCHESTER
	09133-69105	WINCHESTER DRIVE ELECTRONICS
	09133-69520	CONTROLLER PCA

NON-EXCHANGE ASSEMBLIES

09133-68501	FAN ASSEMBLY
09133-61623	DISC CONTROLLER CABLE
09133-61624	DISC R?W CABLE
09133-67110	POWER SUPPLY
09133-08866	TOP COVER/SHIELD ASSEMBLY
2110-0003	FUSE 3A 250V

MISCELLANEOUS PARTS

1	8120-1378	CABLE-POWER
1	0403-0427	BUMPER FOOT
1	0515-0825	SCR M4X.7 X8MM
1	0624-0458	SCR-TPG 8-16
1	0624-0525	SCR-TPG 10-14
1	07940-00026	FAN GUARD
1	09121-48303	FOOT-MOLDED
1	09133-00602	FRT SHIELD-33
1	09133-09100	SPRING-RETAINER
1	09133-20101	CHASSIS - 9133
1	09133-40201	FRT PNL- 9133
1	09133-40202	SWITCH SHAFT
1	09133-42501	LIGHT PIPE
1	09133-61606	LED/PWR CABLE
1	09133-61621	PWR HARNESS
1	09133-68501	FAN ASSEMBLY
1	09144-45404	POWER GUARD
1	1450-0625	LED HOLDER
1	5041-1203	POWER BUTTON

CASE PARTS

Drive Mounting Hardware

FLEXIBLE DISC DRIVE		WINCHESTER DISC DRIVE	
09133-01201	BRACKET	09133-01204	BRACKET
0515-1079	SCREW (BRACKET TO DRIVE)	2360-0113	SCREW (DRIVE TO BRACKET)
0515-1085	SCREW (BRACKET TO CHASSIS)	0511-1085	SCREW (BRACKET TO CHASSIS)
0515-1079	SCREW (CHASSIS TO DRIVE)		

Top Cover Mounting Hardware

3050-0010	FLAT WASHER
0515-0353	SCREW
0151-1085	SCREW

HP-IB Mounting Hardware

0380-1717	HEX STANDOFF
2190-0843	LOCK WASHER

Controller PCA Mounting Hardware

0515-1085 SCREW