# Design of a Low Power Off-Grid Photovoltaic Water Pumping System for Rural Areas

Mahbubur Rahman
*Dept of EEE, BUET*
Dhaka, Bangladesh
1506032@eee.buet.ac.bd

Nazmul Hassan
*Dept of EEE, BUET*
Dhaka, Bangladesh
nazmulhassan@ug.eee.buet.ac.bd

Md. Ziaur Rahman Khan
*Dept of EEE, BUET*
Dhaka, Bangladesh
zrkhan@eee.buet.ac.bd

2020 11th International Conference on Electrical and Computer Engineering (ICECE) | 978-1-6654-2254-3/20/$31.00 ©2020 IEEE | DOI: 10.1109/ICECE51571.2020.9393154

***Abstract*—A simple and low power standalone photovoltaic (PV) water pumping system with conventional centrifugal pump is presented here. The system uses a DC-DC boost converter which extract the maximum power from the solar array and a Sine Pulse Width Modulation (SPWM) technique based Voltage Source Inverter (VSI) for DC-AC conversion . The DC link voltage is controlled by varying pump speed to match the available solar power to pump power. The proposed control scheme requires no additional current and speed sensor. The simulation is performed in MATLAB/SIMULINK under different radiation condition. The simulation results show that the pump can run under low radiation and can fill up a 1000 liter tank within the average sun hours.**

***Index Terms*—Battery-less, Low power, MPPT, Quadratic V/F control, Single phase, Standalone.**

## I. Introduction

Electricity is an essential element for the development of a country. Recently the clean energy is getting much attention because of the climate changes. The sustainable development goal (SDG) 7 calls for clean and affordable energy to everyone. One out of seven people in the world still don't have access to electricity and most of them are living in rural areas of the underdeveloped countries [1]. The government of Bangladesh has set a target to supply electricity to all by 2021. The transmission and distribution grid expansion works are going on in full swing. However, there are places in the country like the hilly areas where the grid expansion is not economically feasible. So the solar home system (SHS) program is being implemented in those places to supply energy to the people. Recently the government has decided to supply 40,000 SHS in hilly areas [2].

A typical solar home system consists of a solar panel, battery and DC loads like lights and fans. In some places TV and mobile charging facilities are also included in the system. The size of the SHS is generally kept small to reduce the cost. They are mainly designed to supply the basic energy need of the people in the remote areas. However, the United Nations (UN) recognizes the human right to water and sanitation. Worldwide, two out of five people haven't access to basic washing facilities [3]. In order to meet the physiological and hygienic needs, the water requirement for a person is 50 to 100 liters per day [4]. Because of the cost of energy in the off-grid areas, the people cannot afford to use pumping facilities with the SHS. So they lack the basic hygiene and sanitation facilities.

Many works have reported about the solar pumping. Design of Photovoltaic Water Pumping System has been reported in [5] but DC motors were used for the pump which are expensive and the maintenance cost is high. Caton et. al. used helical rotor pump for implementing a PV pumping system in Africa [6]. The centrifugal pumps are largely used in the urban areas for water pumping. They are highly reliable and low in cost [7]. However, these pumps are driven by single phase induction motors and so they have a high inrush during switching. The PV system size becomes high for driving such motors. However, a water pumping system may operate in low power by reducing the flow rate. In such case, the time required for filling up the overhead tank will increase. Such a system has not been reported in the literature.

A single-phase low power battery less solar water pumping system for rural off-grid areas is proposed here. A conventional centrifugal pump has been used in the design and V/F control has been used to drive the motor. The V/F control is much popular in induction motor control system because of its easy implementation and cost effectiveness [8]. By varying the frequency while using a centrifugal pump, energy can be utilized in a better way [9]. In scalar V/F control, the torque is maintained constant by controlling both voltage and frequency linearly but this gives low efficiency at low speed. The quadratic V/F control has better performance there [10]. So for better performance at low solar irradiance this method has been utilized in this proposed system.

## II. System design and specification

The solar energy from PV array is passed through a DC-DC converter first. Then a variable frequency AC voltage is generated by a DC-AC converter as shown in Fig. 1. A conventional centrifugal pump with a single phase induction motor is driven by this AC voltage to pump water to the roof of a one storey house.

### A. The pumping system requirement

The pumping requirement is calculated for a typical rural home of 8 people. One day of autonomy for the water use has been assumed. Considering the daily all purposes water consumption rate in rural areas of Bangladesh to be 62.47

978-1-6654-2254-3/20/$31.00 ©2020 IEEE



Authorized licensed use limited to: University of Florida. Downloaded on April 20,2026 at 03:52:15 UTC from IEEE Xplore. Restrictions apply.

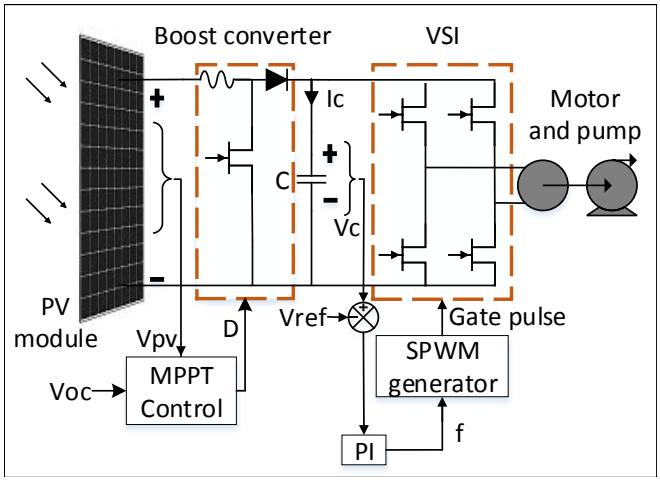


Fig. 1: Full architecture of proposed solar pumping system.

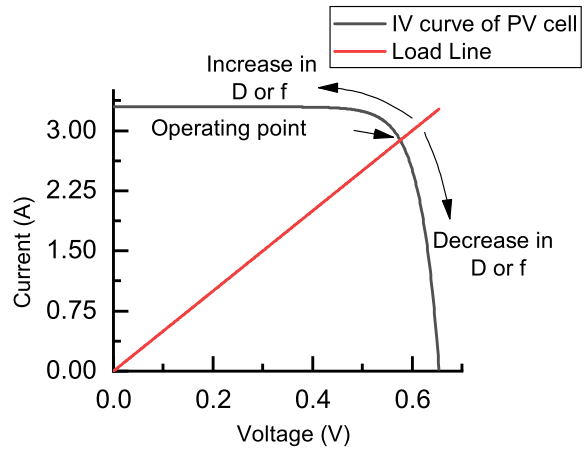


Fig. 2: IV characteristics curve of the module and load line of the designed system.

Liters/person [11], a family of 8 people will require about 1000 liters of water for every two days. The pump will have a suction height of 2 meters (as in case of a shallow tube well in rural areas) and water will be lifted up to 3 meters in the overhead tank.

### B. Pump selection

As the pump needs to operate by a PV system, the rated power of the pump should be as small as possible. A commercially available 1/3 HP centrifugal pump is selected for the design. The technical data to model the pump was taken from the pump characteristic curve provided by the manufacturer [12]. The centrifugal pump has the advantage of exceptionally low power consumption at lower speed as described by equation (1).

$$\frac{Power\ in\ speed\ N_1}{Power\ in\ speed\ N_2} = \left[\frac{N_1}{N_2}\right]^3 \tag{1}$$

### C. Boost converter and Inverter

For boost converter, the DC-DC boost topology is used to gain maximum power from the PV array. Fractional open circuit voltage algorithm is used for Maximum power point tracking (MPPT) at varying irradiances [13]. A full H bridge topology with sine pulse width modulation (SPWM) based Quadratic V/f control scheme is used to regulate the voltage and frequency at the output of the inverter.

### D. PV module

As in the proposed system the pump will be operating at low speed, the power requirement of the PV array is low as well. Though the rated pump power is 250 W, if the motor is operated at half of the rated speed then the consumed power will be 31.25 W (1/8th of the rated one). As irradiance varies, considering the worst-case scenario two 60 W Slimline Monocrystalline solar modules are connected in series to get 120 W at standard test conditions (STC) [14].

## III. Control strategy of the proposed system

The operating point of the controller is the intersecting point of the current-voltage characteristics (IV characteristics) curve of the PV array and the load line as depicted in Fig. 2. The IV characteristics of PV array is determined by the irradiance and temperature so it is fixed for a particular weather condition. But the load line can be altered by the duty cycle of the boost converter and the frequency of the inverter. The load line rotates counterclockwise(CCW) if the duty cycle is increased whereas it rotates clockwise(CW) if reference frequency is decreased. The crucial part of this control block is balancing the DC link voltage (Vc) which is given by,

$$V_c = \frac{1}{C}\int I_c dt \tag{2}$$

If demand exceeds the available power then the energy stored in the capacitor will be delivered to load to meet the demand. In other words current entering into the bus capacitor will be smaller than the current getting out of the bus capacitor over a cycle. As a result, the DC bus voltage decreases according to equation (2). On the contrary, if available power exceeds demand then the excess energy is used to charge the capacitor resulting in increase of DC bus voltage. The system has two main sub control blocks naming the MPPT control block and the frequency control block.

### A. MPPT control of boost converter

The fractional open circuit method MPPT control is based on the fact that the voltage of a PV panel at the maximum power point (MPP) is linearly proportional to the open-circuit voltage of the panel as shown in the following equation (3).

$$V_{MPP} = K * V_{oc} \tag{3}$$

The PV panel's open circuit voltage is measured by interrupting the normal operation of the system with a certain frequency and storing the measured value. This MPPT method


Authorized licensed use limited to: University of Florida. Downloaded on April 20,2026 at 03:52:15 UTC from IEEE Xplore. Restrictions apply.

is simpler than other methods as here only PV voltage is needed to be sensed.

### B. Frequency control

This block senses the DC link voltage and compares it with the reference voltage. The difference is fed into a Proportional Integral (PI) controller. If the DC link voltage exceeds the reference voltage then there is excess energy stored in the capacitor. So, the controller increases the reference frequency of the inverter. On the contrary, if the voltage decreases due to decrease in radiation, the frequency is also decreased by the controller. Now if sudden rise in irradiance occurs, the available maximum power increases. Eventually the frequency control circuit senses the increase in dc bus voltage. It then increases the frequency to raise the delivery of the pump. As frequency is increased the load line rotates CCW. To keep track with the MPP, the duty cycle must be decreased to rotate the load line CW to bring it back to MPP situation. The reference frequency is fed into a quadratic V/f control block that generates the SPWM pulses to drive the motor.

### C. Starting mechanism

The starting torque equation for single phase induction motor is given by,

$$Tstart \propto |Imain| * |Iaux| * sin(\theta) \tag{4}$$

where, *Tstart, Imain, Iaux* are the starting torque, main winding and auxiliary winding current and $\theta$ is the phase angle difference between main and auxiliary winding currents, respectively [15]. The *Imain* and *Iaux* are proportional to the applied voltage. Initially the current drawn from the motor is higher than steady state. As a consequence, power demanded by the motor is higher during starting. So, during starting the PV system needs to provide enough power to charge the dc link capacitor and to start the motor simultaneously. For this reason, the MPPT algorithm and the frequency control algorithm are enabled even at the initial condition. However, even if the MPPT is enabled during starting, the power is barely enough to simultaneously charge the capacitor and start the motor resulting in low torque problem. To avoid this problem, the DC link capacitor is charged to the rated voltage prior to starting the motor. The interesting part of this control scheme is that the frequency ramp start is inherent in the proposed starting mechanism. Initially the motor wants to draw inrush current causing the bus voltage to fall. But the frequency control block prevents the motor to draw high inrush current by controlling the frequency. As a result, the reference frequency is forced to increase gradually.

## IV. Results and Discussion

The pumping system is simulated in the SIMSCAPE platform and later integrated with Simulink. In the simulation three step changes of irradiances are taken into account to see the effects of irradiance on the proposed system. The motor is assumed to be started at 700 $W/m^2$ irradiance. After 25s the irradiance suddenly increases to 900 $W/m^2$ and 15s later it decreases to 500 $W/m^2$ as depicted in Fig. 3a. In the simulation, the PV system power follows the irradiance changes as shown in Fig. 3b. The maximum powers available to the motor for those irradiances are 86 W, 110 W and 61 W, respectively.

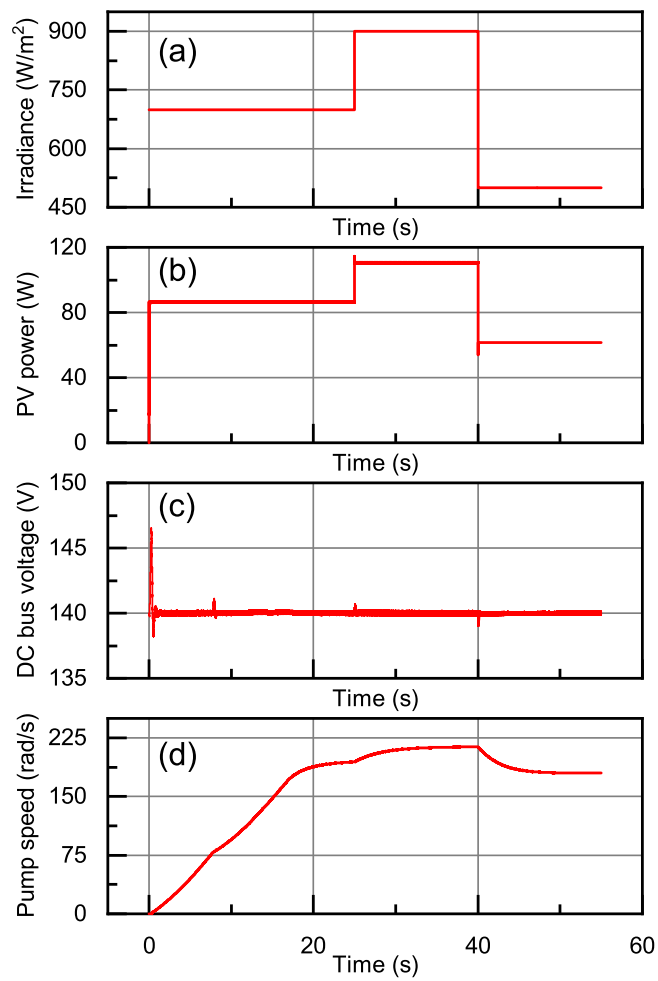


Fig. 3: Variation of (a) irriadiance, (b) PV max power, (c) Dc bus voltage, (d) pump speed, with time.

During the starting condition of the pump, the available power of the PV is around 86 W. At first, the DC bus voltage is charged at 140 V as motor is rated to run at 110 V. Initially there is an overshoot in the DC bus voltage but the PI algorithm of the controller fixes that deviation very well as depicted in Fig. 3c. The starting capacitor is switched out at 25% of the synchronous speed of the motor which happens at 7.8s. It is clear from the Fig. 3c that the PI controller is doing its job quite good by keeping the bus voltage at 140 V at different irradiance levels. Fig. 3d shows that the motor speed builds up gradually and after 23s the motor reaches steady state rotor speed at 194 $rad/s$. At 25s sudden increase in irradiance happens and the maximum PV power increases to 110 W. In response, the rotor speed increases to 213.5 $rad/s$. So, the frequency controller utilized extra energy coming from


Authorized licensed use limited to: University of Florida. Downloaded on April 20,2026 at 03:52:15 UTC from IEEE Xplore. Restrictions apply.

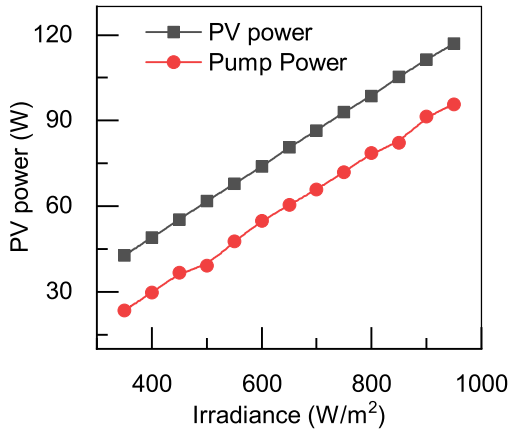


Fig. 4: Power of the PV system and the pump for different irradiance.

the PV to increase the rotor speed while keeping the DC bus voltage constant at 140 V. Again at 40s irradiance decreases to 500 $W/m^2$. As a result the maximum power is reduced to 61 W and the frequency controller decreases the reference frequency to decrease the power input to the pump maintaining constant DC bus voltage.

The PV power and the pump power increases linearly with irradiance as illustrated in Fig. 4. The efficiency of the cascaded block of DC-DC boost and the SPWM inverter is found to be around 77% throughout the entire range of irradiance. However, the efficiency of the motor will be low at lower speed but the motor efficiency is not a main target here. The Fig. 5 shows that the flow rate increases as available pump power increases reducing the time requirement to fill the 1000 liter overhead tank. Even at low pump power of around 40 W, the time required to fill up the tank is less than 3 hours. The time is lower than the average sun hour of Bangladesh which is 4.94 hours [16]. The design has a 1 day autonomy.

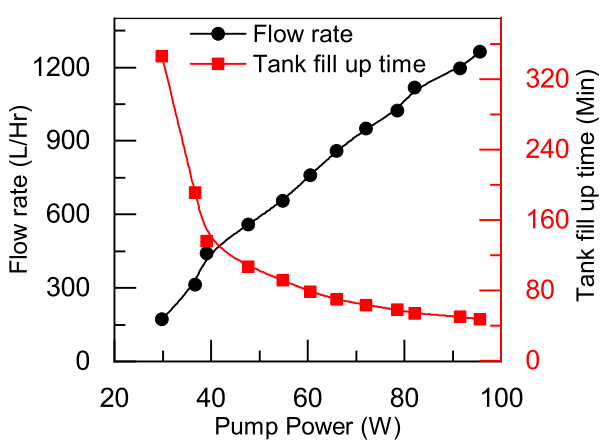


Fig. 5: Variation of pump flow rate and the tank fill up time with the pump input power.

So the system is capable of supplying water to the rural homes with conventional centrifugal pump.

## V. Conclusion

A low power simple standalone photovoltaic water pumping system has been proposed. The system doesn't require a battery to operate and commercially available centrifugal pumps are used in the design. The MPPT algorithm tracks the MPP with acceptable tolerance at various radiation. The speed reference is set based on available power from solar by regulating the DC bus voltage. The control method is verified using MATLAB/SIMULINK under varying irradiance levels. The tank fill up time is found to be adequate compared to the availability of solar power. The system can be used to ensure hygiene and sanitation by providing running water in the remote off-grid areas.

## References


[1] "Sustainable development goals," https://www.undp.org/content/undp/en/home/sustainable-development-goals/goal-7-affordable-and-clean-energy.html.

[2] A. GUPTA, "Bangladesh to install another 40,000 free solar home systems," https://www.eqmagpro.com/bangladesh-to-install-another-40000-free-solar-home-systems/, 2020.

[3] "Ensure access to water and sanitation for all," https://www.un.org/sustainabledevelopment/water-and-sanitation/.

[4] "The human right to water and sanitation," https://www.un.org/waterforlifedecade/human_right_to_water.shtml.

[5] R. Kumar and B. Singh, "Bldc motor-driven solar pv array-fed water pumping system employing zeta converter," *IEEE Transactions on Industry Applications*, vol. 52, no. 3, pp. 2315–2322, 2016.

[6] P. Caton, "Design of rural photovoltaic water pumping systems and the potential of manual array tracking for a west-african village," *Solar Energy*, vol. 103, pp. 288–302, 2014.

[7] J. V. M. Caracas, G. de Carvalho Farias, L. F. M. Teixeira, and L. A. de Souza Ribeiro, "Implementation of a high-efficiency, high-lifetime, and low-cost converter for an autonomous photovoltaic water pumping system," *IEEE Transactions on Industry Applications*, vol. 50, no. 1, pp. 631–641, 2013.

[8] F. Karbakhsh, M. Amiri, and H. A. Zarchi, "Two-switch flyback inverter employing a current sensorless mppt and scalar control for low cost solar powered pumps," *IET Renewable Power Generation*, vol. 11, no. 5, pp. 669–677, 2016.

[9] "Variable frequency drive for variable torque loads," http://www.vfds.org/variable-frequency-drive-for-variable-torque-loads-616893.html.

[10] N. Yussif, A. S. Abdel-Khalik, and A. M. Mohamed, "An improved quadratic v/f-based control of photovoltaic battery-less induction motor driven water pumping system," in *2019 International Conference on Sustainable Energy Engineering and Application (ICSEEA)*. IEEE, 2019, pp. 1–6.

[11] A. H. Milton, H. Rahman, W. Smith, R. Shrestha, and K. Dear, "Water consumption patterns in rural bangladesh: are we underestimating total arsenic load?" *Journal of water and health*, vol. 4, no. 4, pp. 431–436, 2006.

[12] "Pedrollo centrifugal pumps," https://www.pedrollo.com/en/cp-025-22-kw-centrifugal-pumps/301.

[13] B. Subudhi and R. Pradhan, "A comparative study on maximum power point tracking techniques for photovoltaic power systems," *IEEE transactions on Sustainable Energy*, vol. 4, no. 1, pp. 89–98, 2012.

[14] "Sunstore solar," https://www.sunstore.co.uk/product/12v-60w-solar-panel-slimline-monocrystalline-670x576/.

[15] C. I. Hubert, *Electric Machines:Theory, Operation, Applications, Adjustment and Control*. Prentice Hall PTR, 2001.

[16] K. U. Tahera, R. Fabiha, and M. Z. R. Khan, "Solar photovoltaic system design for a residential hall in buet," in *2018 10th International Conference on Electrical and Computer Engineering (ICECE)*. IEEE, 2018, pp. 437–440.



Authorized licensed use limited to: University of Florida. Downloaded on April 20,2026 at 03:52:15 UTC from IEEE Xplore. Restrictions apply.