BANGLADESH UNIVERSITY OF ENGINEERING & TECHNOLOGY

Course No: EEE-316

Name of the Project:

Power Quality Control and harmonics suppression by Shunt active power filter

Introduction:

Harmonics is a great problem in power systems that has become serious recently owing to the wide utilization of force hardware-related supplies. Besides, the information force component of the vast majority of this supplies is poor. Conventionally, a passive power filter and capacitor were used to attenuate the harmonics and improve the input power factor. Static VAR compensators are introduced with many configurations to come out of the situations of power factor correction. But some SVC configurations have very long response time that they are not acceptable for fast fluctuating loads and also lower order harmonics are generated by themselves. Many harmonics-suppression methods based on the technique of power electronics have been developed to solve harmonics problems. One of them is the active power filter.

Limitations of Passive filters:

Passive filters consisting of a bank of tuned filters and/or a high-pass filter have been broadly used to suppress harmonics because of low initial costs and high efficiency. However, passive filters have the following drawbacks:

1) Filtering characteristics are strongly affected by the source impedance .

2) Amplification of currents on the source side at specific frequencies can appear due to the parallel resonance between the source and the passive filter.

3) Excessive harmonic currents flow into the passive filter due to the voltage distortion caused by the possible series resonance with the source.

What is SAPF? :

The method of removing harmonics in shunt active power filters is by supplying the harmonics current to the load in opposite direction to that of supply from mains. Here, shunt active power filter acts as the current source that supplies the compensating current that the load needs and has a phase shift of 180 deg. Because of which the harmonic currents are cancelled that from the mains supply and from the filter. As per this mains current becomes pure sinusoidal. These filters are considerable to any load that generates the harmonics.

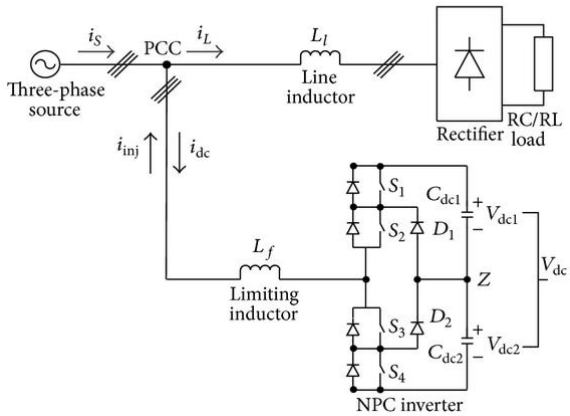

Fig: Block diagram of a typical SAPF.

Theory behind the scene:

We assumed that the line voltage from the mains is pure sinusoidal. So, line voltage from the mains,

$$Vs = Vp * \sin(wt)$$

Now if the I-V characteristic of the load is non-linear then the load current will be non linear and can be expressed as,

$$IL = \sum_{n=1}^{\infty} In * \sin(nwt + \theta n)$$

$$= I1 * \sin(wt + \ \theta 1) + \sum_{n=2}^{\infty} In * \sin(nwt + \theta n)$$

Now let's assume a reference sinusoidal signal,

$$Ir = \sin(wt)$$

The amplitude of real part of fundamental load current be,

$$Ix = \frac{1}{T}\int Il(t) * Ir(t)dt = I1 * cos\theta 1$$

So, The fundamental load current is $\boldsymbol{Isc(t) = Ix * Ir(t)}$

Hence, our reference compensation current is $\boldsymbol{Iref = Il(t) - Isc(t)}$

Now ,this I_{ref} is generated by switching the mosfets in a controlled way. The process used to generate the mosfet gate pulses is named as 'Hysteresis current control'.

Schematic diagram of the whole system:

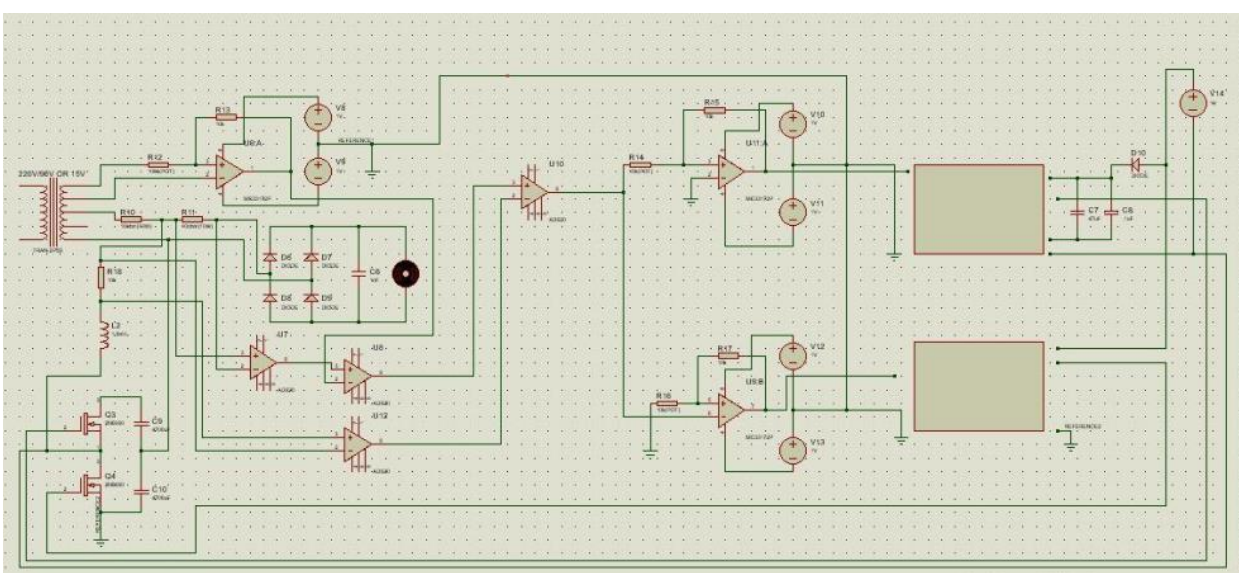

Hardware implementation :

Sensing the load current: To sense the load current we used AD620 which is a low cost differential instrumentational operational amplifiers. We used a 10 0hm 10 watt power resistor as a sense resistor . So the output of the AD620 is 10 times the current through the sense resistor.

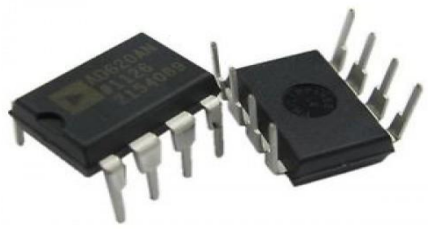

FIG: AD620 developed by analog devices.

Acquiring the fundamental load current : We know that the waveshape of the fundamental load curren tis same as the voltage from the mains. But we don't know the magnitude of the fundamental. In our case we used a step-down(220 v/96 v) transformer to power the motor load. The transformer has another winding that provide 15v from the 220v ,most probably for the control circuit. Now we used that winding and scaled that secondary voltage (15 volt peak) by an opamp (TL084). We used a pot so that we can change the magnitude of the output voltage to get the desired magnitude.

Getting the reference harmonics content of load current: To get the reference harmonics current we simply subtracted the fundamental current from the load current. Here we used another AD620 to get the subtract operation done. Then to confirm that we have extracted the correct harmonics current we measured the acquired harmonics and load current by an oscilloscope and made a subtract operation inside the oscilloscope. Now if we are correct then a sinusoidal current should be displayed which is the fundamental current. And if the output is not sinusoidal then the pot of the scaling circuit must be tuned and observe whether the output become simusoidal or not. After proper scaling of the voltage from the secondary voltage (here secondary voltage is referred to the 15 v, not the 96v) we will get a sinusoidal output at the oscilloscope. Hence our reference harmonics current is acquired.

Acquiring the Injected current: Now we added a 10 ohm 10 watt power resistor in the injection path and again used the same procedure to get the injected current i.e, another AD620 is used to get the injected current.

Generating the gate pulses for the Mosfets: Now we designed a hysteresis comparator circuit to create the gate pulses for the mosfets. For this we used TL084 opamp and the concept of positive feedback.The hysteresis is about 2 V. That is if the injected current is greater than the reference harmonics current by 1v then output of the comparator will be +12v and if the injected current is smaller than the reference harmonics current by 1v then the output will be -12v. In this way we acquired the gate pulse of the high side mosfet. For the low side mosfet the pulses are incerted. Hence we derived the gate pulses for both high side and low side mosfets.

Isolating the mosfet and bootstrapping : Now the gate pulses are isolated by optocoupler (TLP250). For the low side the circuit is simple but for the high side switching capacitor bootstrapping is needed. In the bootstrapper circuit we used a 1N4007 diode and a bootstrap capacitor of 47uF. The circuit diagram is given below:

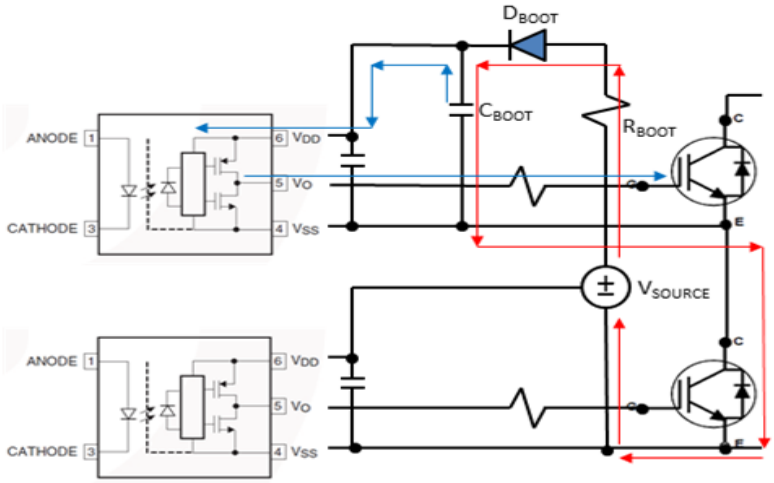

FIG: Bootstrap operation.

Results and waveshapes :

FIG: Load current or grid current before compensation.

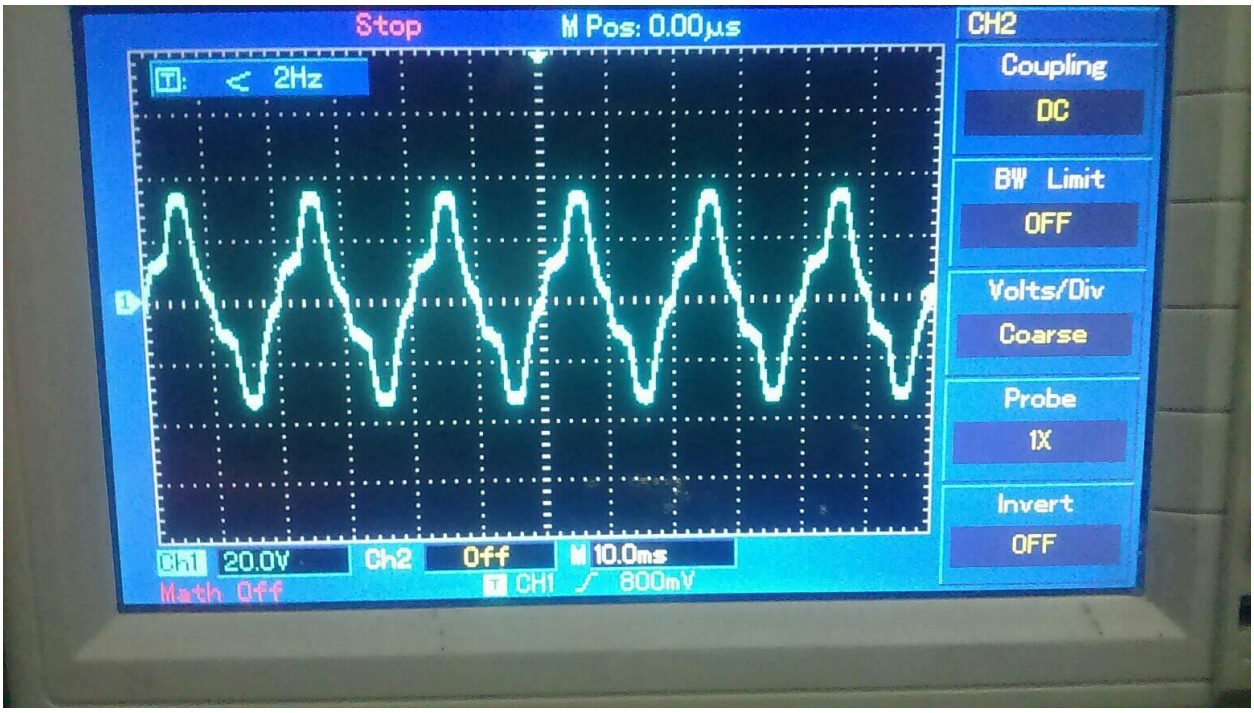

FIG: Grid current after compensation.

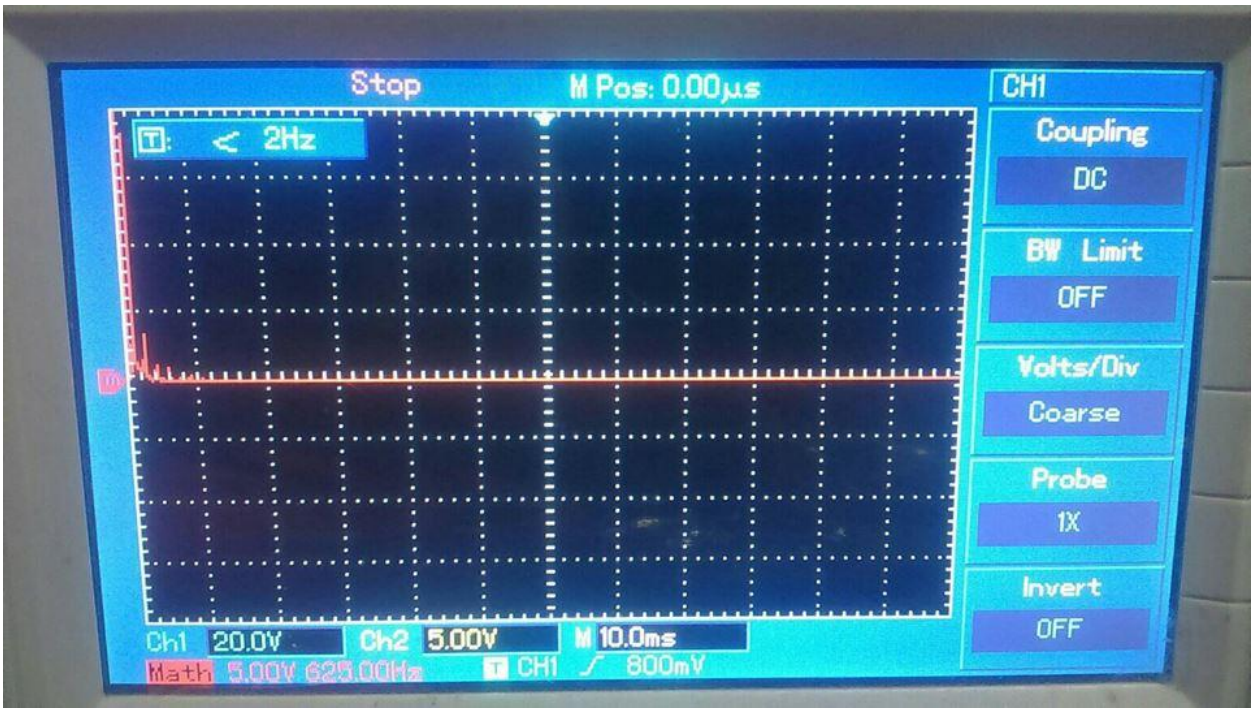

FIG: Grid current FFT (after compensation).

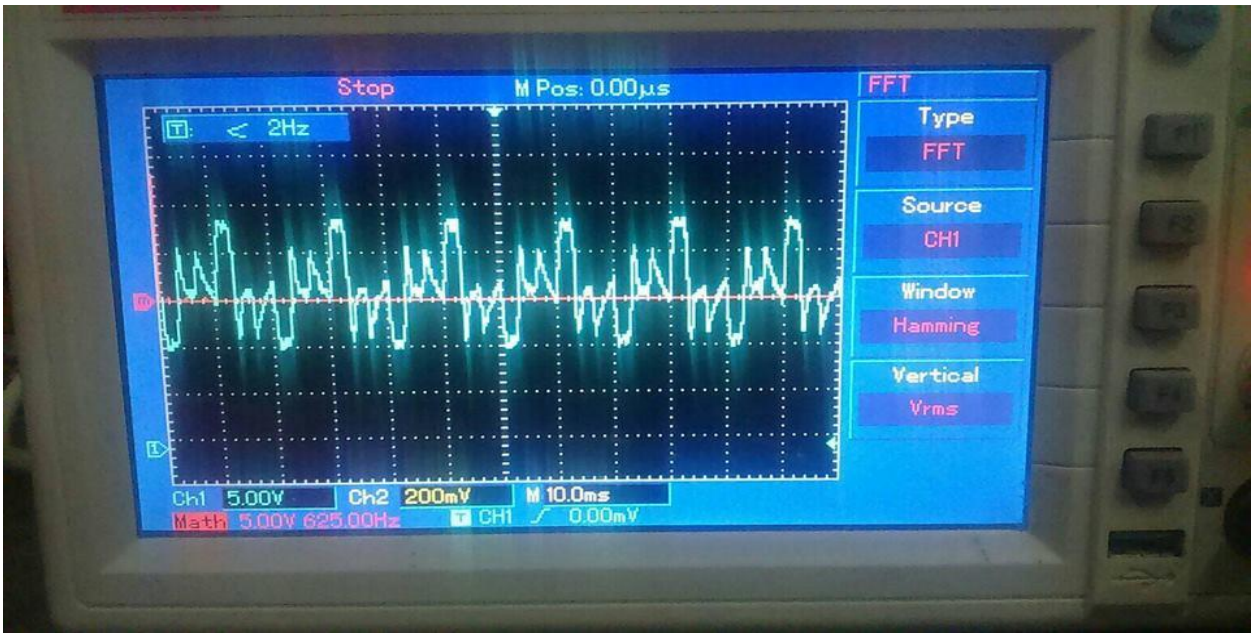

FIG: Reference harmonics current.

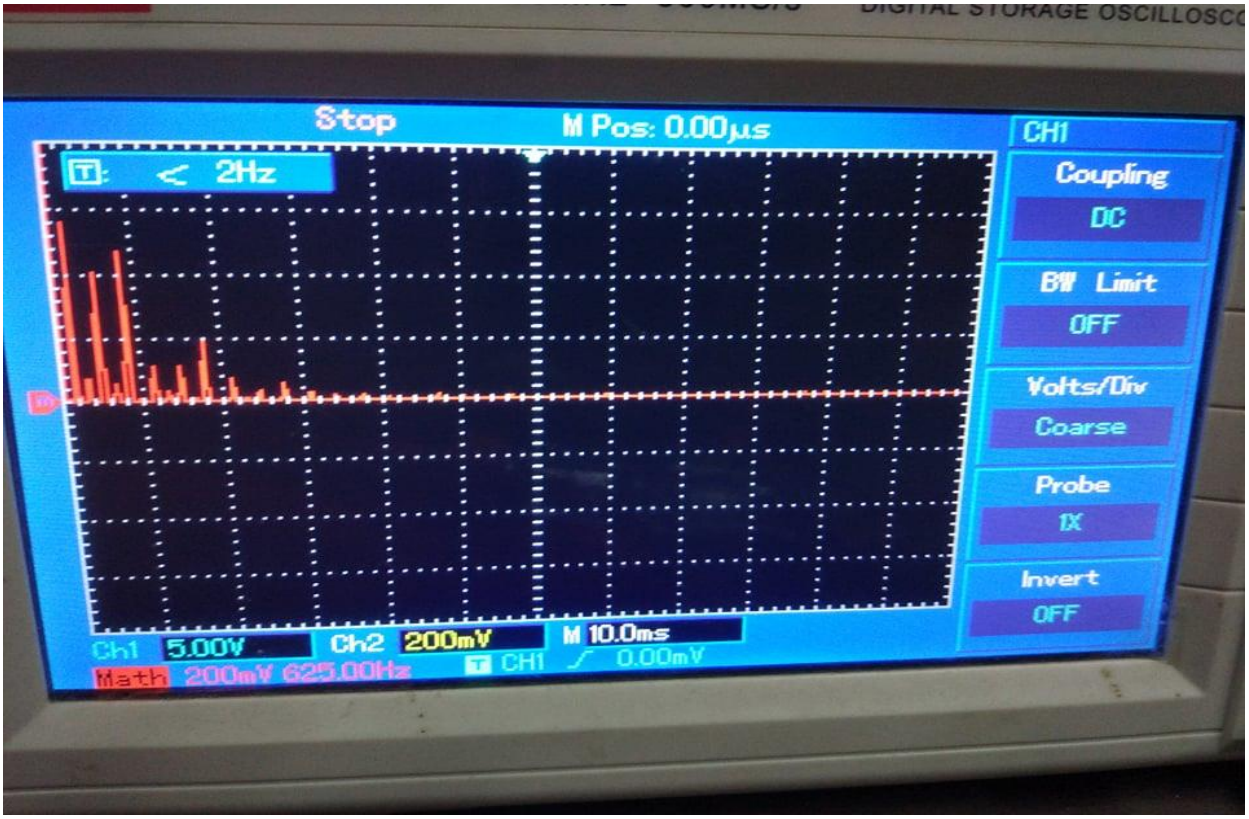

FIG: Harmonics current FFT.

It is clear that after compensation the harmonics contents are removed from the grid current.

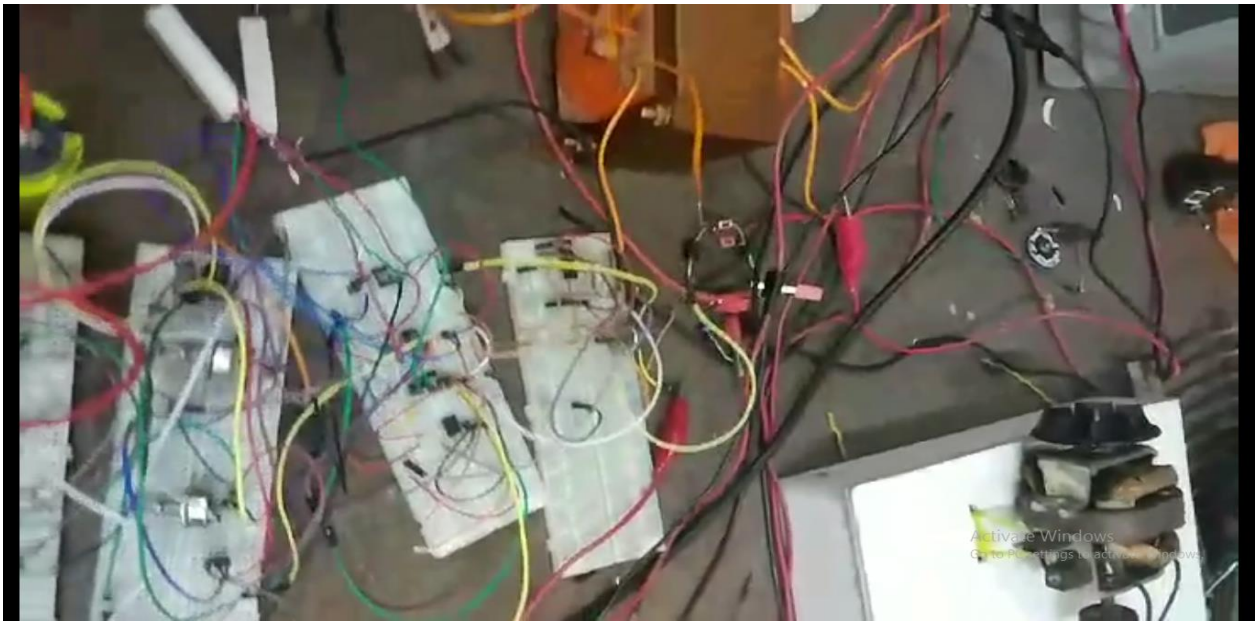

FIG: A picture of the implemented system.

Limitations and future development:

- Working with analog devices is difficult. The whole system can be designed in digital scheme.In that case high resolution fast ADCs are needed to sample the load current, injected current and mains voltage. So, in digital system we make the compensator more robust.
- In our system the grid current is not perfectly sinusoidal. Because the mosfets are not showing the expected switching operation.
- The whole system is designed for single phase load. For three phase load the system is more complex. But the concept is same as single phase. Future development can be made to suit this design for three phase loads.
- In this system we manually tuned the fundamental component of the load current. That is if we change the load the system must be tuned again. An automatic system can be designed that will yield the fundamental component of the load current. In digital system the process is much simpler and easy to design.
- In this system we didn't include any kind of protection devices. It is a must to include protection system so that it lasts longer in practical field.
- For acquiring current data we used 10 ohm 10 watt resistor as a sense resistor. But in that case a huge voltage drop is occurred in the resistors. So the resistors are getting hot if there is current above 1 ampere. To solve this problem we can use small sense resistors. Then the output signal from the differential opamps must be amplified for calculation. Or we can use current transformers (CTs) to acquire the current data.
- The voltage across the capacitor in the inverter should be 1.4 times higher than the mains voltage. So a PI compensator should be added to maintain the capacitor voltage in desired condition. In our case we neglected this step.
- Finally , we implemented this for 96 v rms. It can be further improved to implement the concept for higher voltages.