Project Name:

Shunt-Active-Power-Filter-for-solar-tied-DC-AC-converter

(As a requirement under the course POWER SYSTEM I)

Mahbubur Rahman

Date: August 6, 2018

Abstract:

The problem of interfacing a PV cell with an electrical three phase grid is addressed in the presence of nonlinear loads.The connection of PV cell is done in two stages with both a DC/DC converter and DC/AC multilevel inverter.The latter is operating simultaneously as in interfacing system and as a Shunt active power filter(SAPF).The main objectives of the proposed control system are threefold.They are

(i)Transferring the optimal power from PV cell to the Power grid.

(ii)Cancelling the load current harmonics and compensating the reactive power abosorbed by nonlinear loads.

(iii)Balancing the capacitor voltages and regulating the DC bus voltage.

This project was created and simulated in Matlab(Simulink).Simulations will show that the proposed control system achieved the listed objectives described above.

Introduction:

Our project is divided into two main parts .One is Shunt Active power Filter and the other one is PV Cell.They are added together to built a more sophisticated and an economical system.Why is that? The simple reason is that both PV cell and Shunt Active power Filter use Inverter.So,We use one inverter for both PV cell and Shunt Active power Filter to make the power system more economical.Moreover,we are supplying additional power from PV cell to the Power grid and along with that we are cancelling the harmonics in the three phase power grid by sending the exact opposite of the harmonics current from PV cell to Power grid ,thus the power absorbed by nonlinear loads is compensated.So,we are making a Power system which is economical,effective in harmonics cancelling and removing the problems of non linear loads,effective in increasing the power supply.This makes our Power system structure very intriguing and robust.

There are certain things we should know before we describe our power system.In this part,We will describe briefly about our objectives and what problems we solved.

1)

The first one is problems of non-linear loads and harmonics.

In AC power distribution systems, harmonics occur when the normal electric current waveform is distorted by non-linear loads. Non-linear loads occur when the resistance is not a constant and changes during each sine wave of the applied voltage waveform,resulting in a series of positive and negative pulses.

Most power systems can accommodate a certain level of harmonic currents but will experience problems when they become a significant component of the overall load. As these higher frequency harmonic currents flow through the power system, they can create problems such as:
•Overheating of electrical distribution equipment, such as cables, transformers, standby generators, etc.

•Overheating of rotating equipment, such aselectric motors.
•High voltages and circulating currents caused by harmonic resonance.
•Equipment malfunctions due to excessive voltage distortion.
•Increased internal losses in connected equipment resulting in component failure and shortened lifespan.
•False operation of protection equipment .
•Lower system power factor preventing effective utilization.
•Voltage regulator problems on diesel generators .
•Inability of automatic transfer switches tooperate inclosed transition .
Harmonics overheat equipment by several means. For example, in electric machines and transformers, harmonic currents cause additional power losses by (i) increasing the eddy currents that flow in their laminated cores, (ii) through increased leakage currents across insulation and (iii) by producing skin effect in conductors.

The fact that harmonic currents create voltage distortion as they flow through the power system's impedance makes their impact even more serious. It is voltage distortion, not current distortion, that will affect the connected equipment on the power system.

2) We solved the non-linearity problems of load by cancelling the harmonics.This is done using a shunt active power filter.The principle of shunt active power filter is to produce harmonic currents equal in magnitude but opposite in phase to those harmonics which are present in the grid.So,the phase shift of the harmonic current from SAPF would be 180 degree.Non linear loads become linear if SAPF is used.As a result it can cancel harmonics and also compensate reactive power.

In our system,half of our systems consists of different instruments which is called SAPF all together.

3) With the development of control tools,PV systems are no longer limited to active power generators in transmission and distribution networks,but they also contribute to the improvement of quality of the generated electrical energy.

As both of the Shunt Active Power Filter and PV Cell needs inverter.We add the PV cell and SAPF and only use one inverter to build our system.

Theory:

Photo-voltaic cells produce DC electric voltage. To supply this to the grid we must go through an inverter and the inverter is controlled by a switching system.So, we can control the amplitude and frequency of the ac current that is converted by the switching system.So,if we will design a feedback system such that it can read THD value at the system and gives a feedback to the switching system. And the switching system will convert the DC power to AC power in such a way that the injected current's harmonics and the load harmonics will cancel each other.The following figure will show the system's current and voltages and the current generated by the switching system:

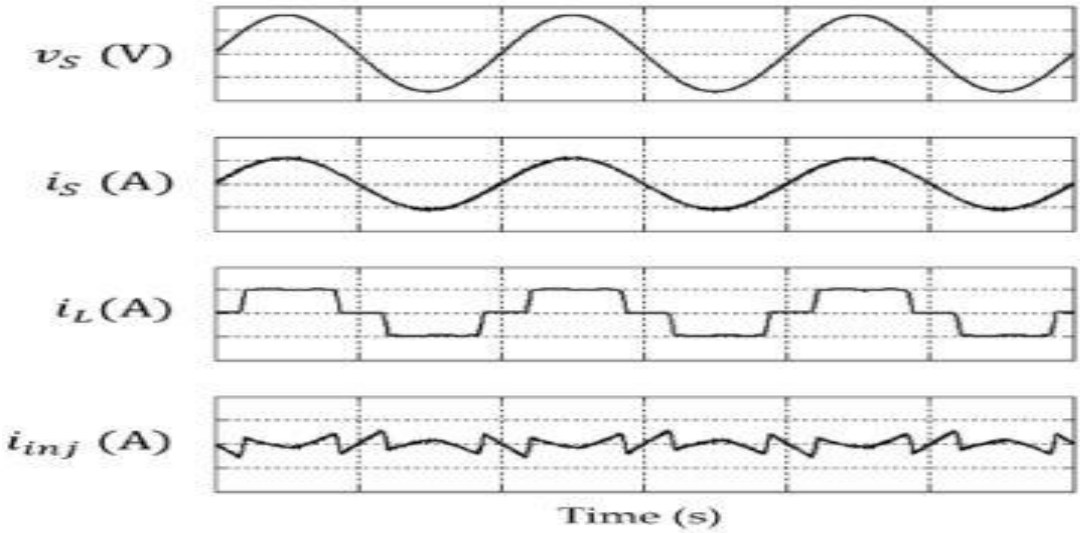

Fig:Theoretical waveforms .

Here Vs is the applied voltage,i_s the current from the load; i_L is the current of the non-linear load and the i_{inj} is the current injected by the inverter.The ideal block diagram of our power system is given below: **Signals Flow in the proposed Strategy**

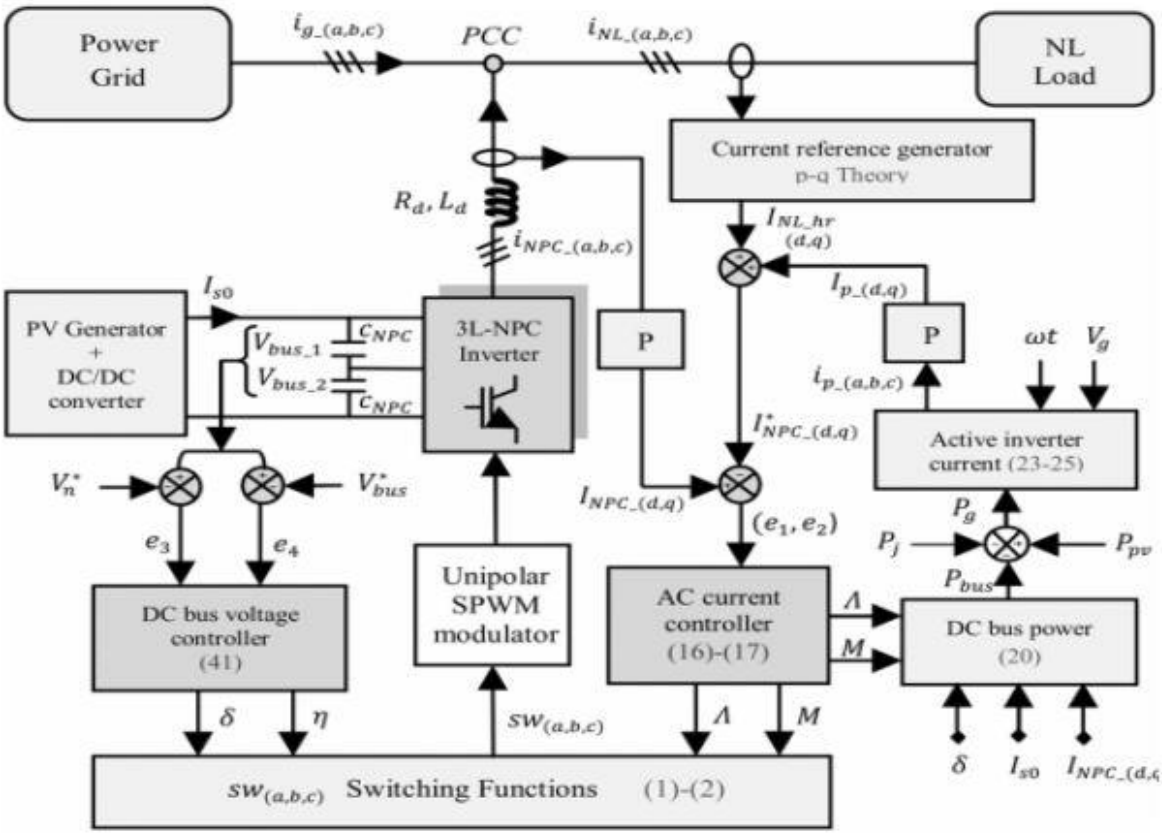

To visualize and to understand our power system easily we will use another block diagram:

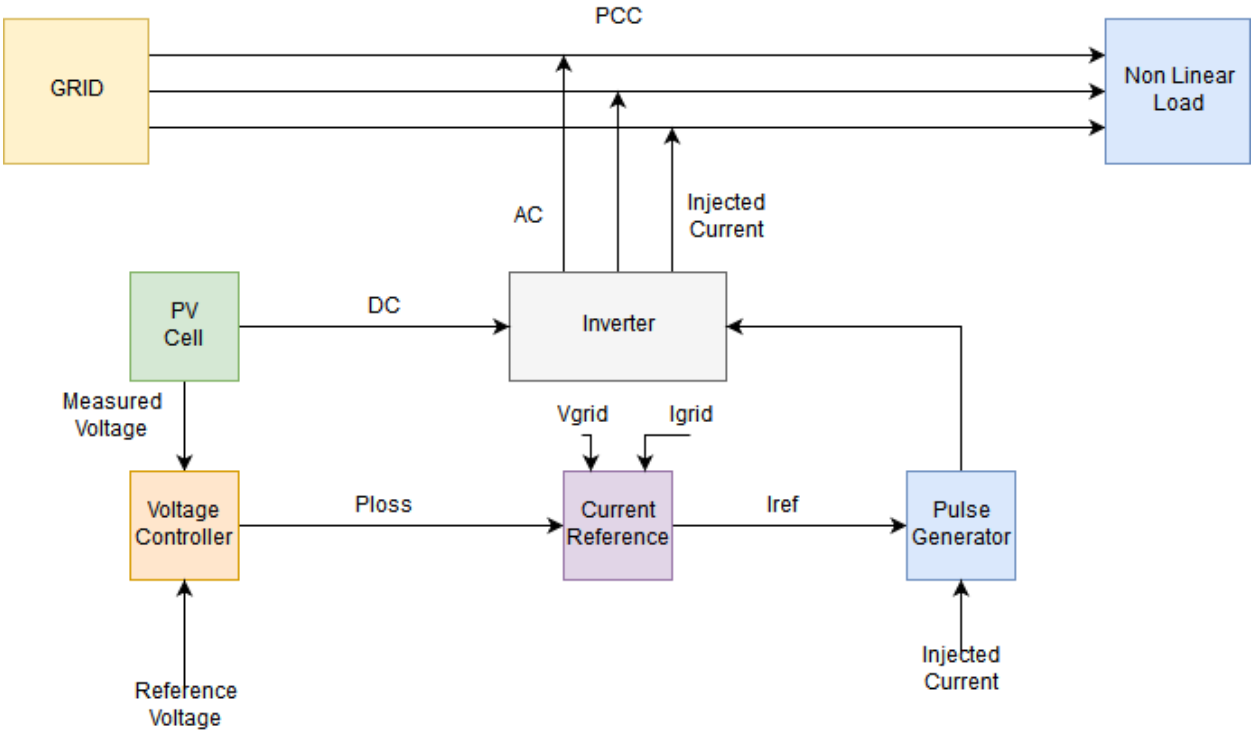

Power Grid:

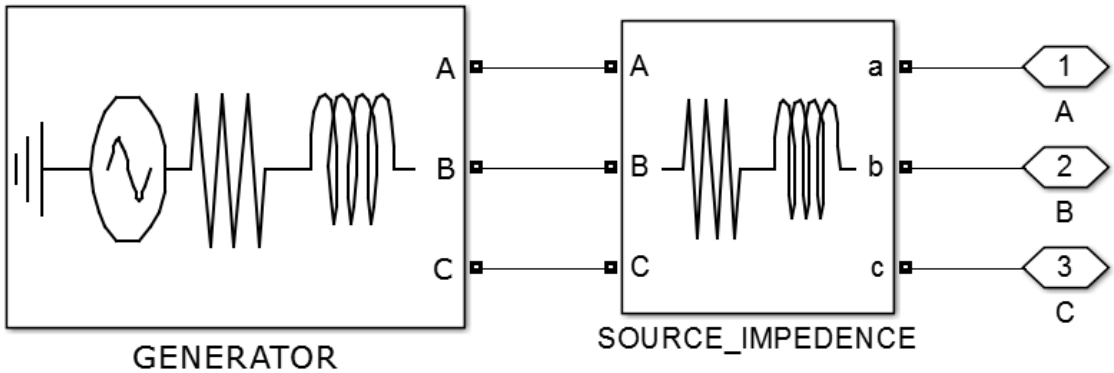

We have modeled the grid by adding a block of generator of swing type. The phase to phase rms voltage is 400V. A 3 phase source impedence is connected in series with the generator.

Non-linear Load:

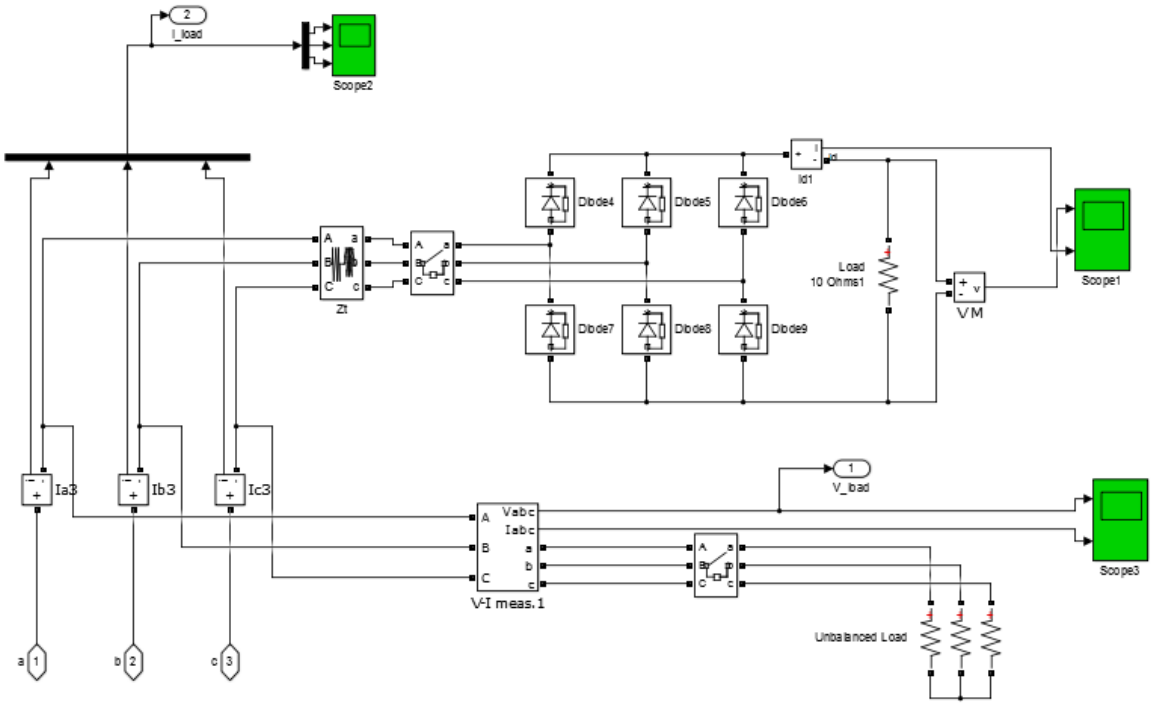

We used a model of nonlinear and unbalanced load . Mainly this consists of resistances, inductances and diodes. The IV characteristic of the load is non-linear, i.e if we give a sinusoidal voltage we will get a non-sinusoidal current.

PV-cell:

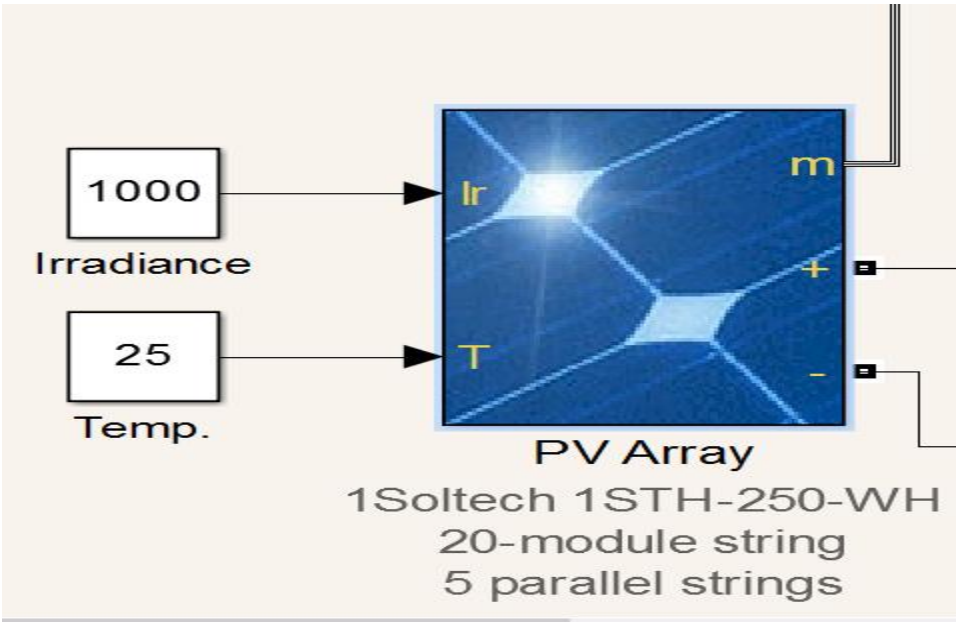

For this purpose we used a built-in model of Simulink. The name of the module is **1Soltech 1S TH-250-W.** In the PV array there are 20 module string and 5 parallel strings. The solar cell model takes two inputs, such as- irradiance and temperature. Here we used irradiance of 1000 W/m^2 and temperature is 25°C. The I-V plot and P-V plot is given below:

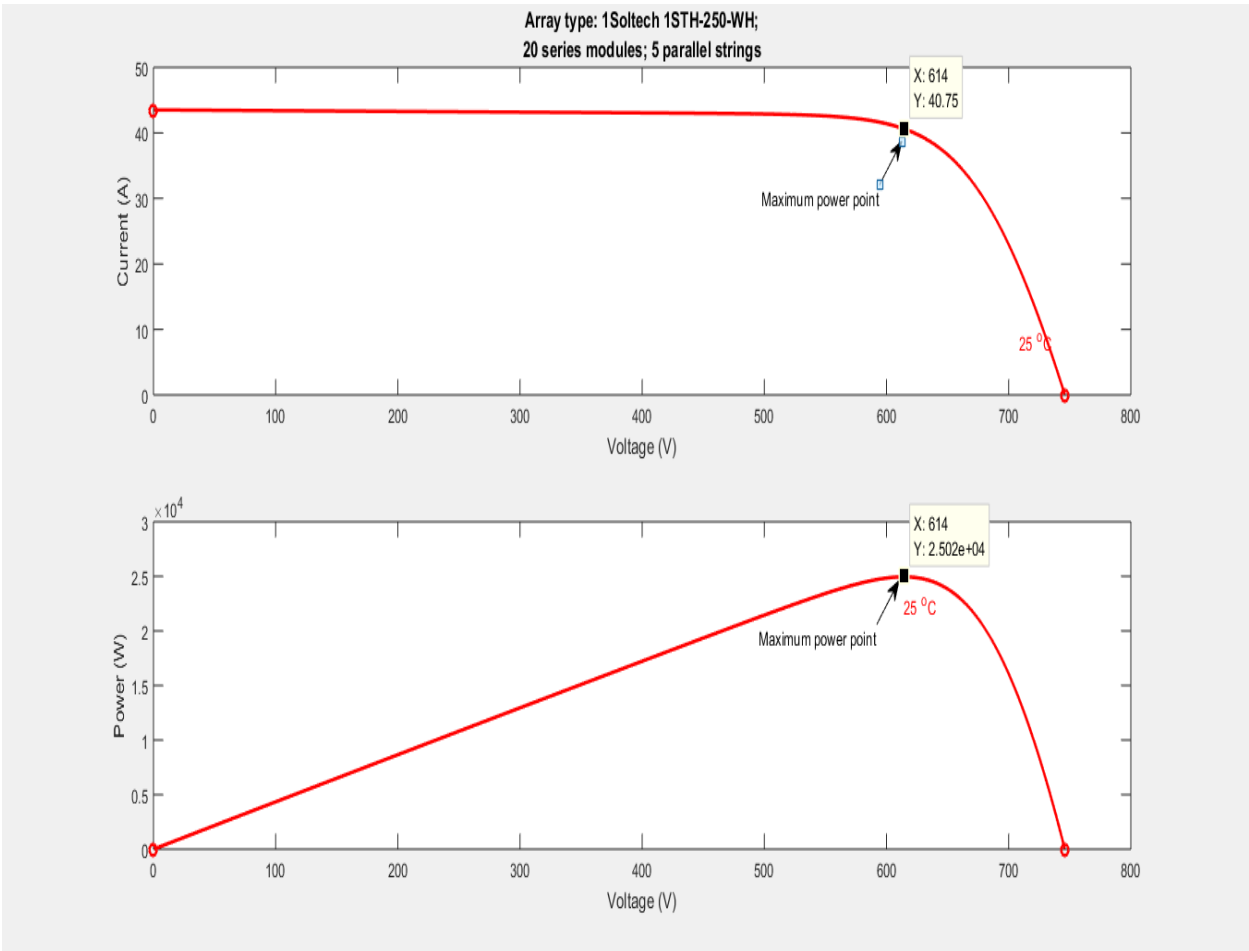

Here From the plots we can see that the Max power is 2.5 KW and at this power the voltage is 614 V. This 614 V is our reference voltage for the DC link capacitor.

Voltage controller block:

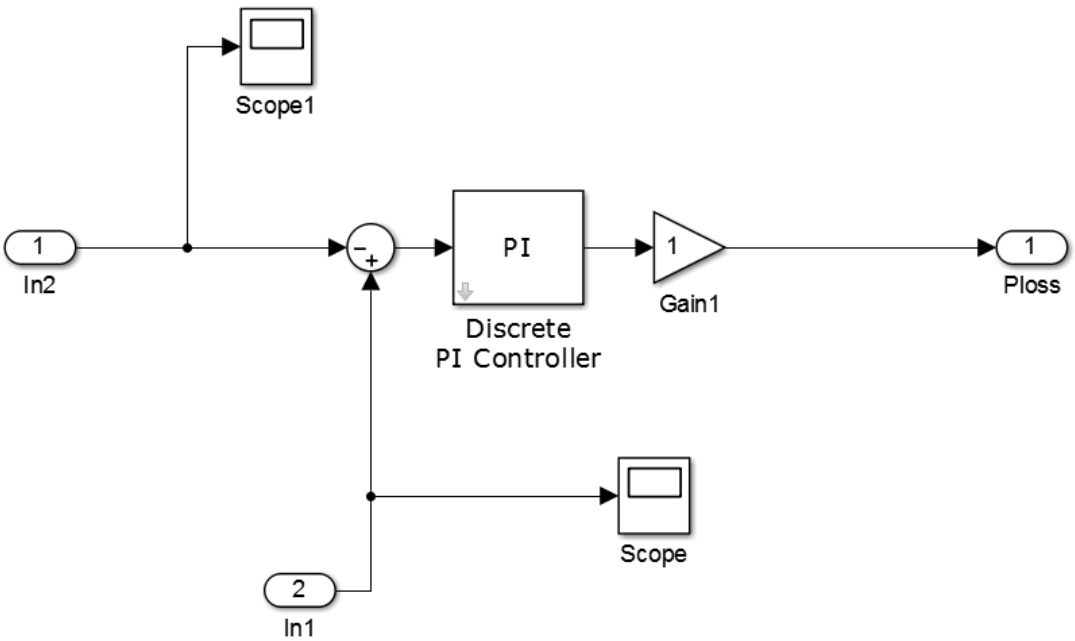

This block takes the measured voltage and the reference voltage as input. Here we used a PI Controller to minimize the difference of the referenced voltage and the measured voltage of DC link capacitor (40uF).The output of the voltage controller is denoted by Ploss. Ploss is proportional to the power deviation from the maximum power.

Current reference Extraction block:

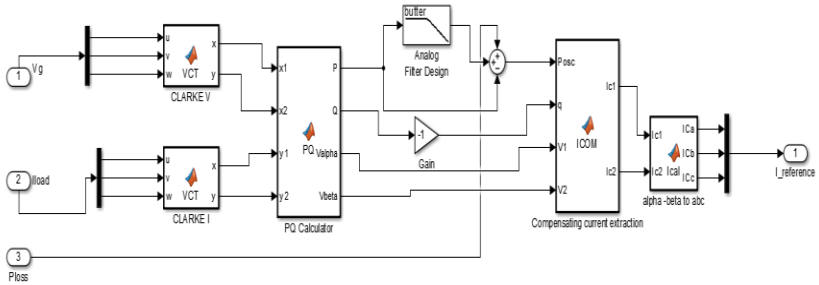

ClARKE TRANSFORMATION:

Actually this block is the heart of our model. We have used some algorithm to determine the compensating current. The inputs of the blocks are Vg(Grid Voltage), Iload(Load current) and Ploss(Output of Voltage control block). At first the three phase grid voltages and load currents are transformed into two phases (abc to αβ) by **Clarke Transformation**. Reason for this transformation is calculation in two phase is much easier and efficient in two phases. For this transformation we wrote a code and added a function block to call the function by Simulink. The code is –

```
function [x,y] = VCT(u,v,w)


x = sqrt(2/3)*(u-(0.5*v)-(0.5*w));
y = sqrt(2)*(0+(0.5*v)-(0.5*w));


end
```

PQ THEORY:

Now we used an algorithm namely 'PQ THEORY', which is widely used to design controllers for power filters. We made a matlab function block to implement the theory.The inputs are the alpha-beta transformed signals of the grid voltage and load current.The code for 'PQ calculator' block is-

```
function [P,Q,Valpha,Vbeta] = PQ(x1,x2,y1,y2)
%#em1

P = (x1*y1)+(x2*y2);
Q = (x2*y1)-(x1*y2);
Valpha = x1;
Vbeta = x2;
```

REFERENCE CURRENT:

Here the outputs are P,Q,Valpha and Vbeta. Where Valpha and Vbeta is the alpha beta component of the grid voltage.

After that we used a filter to block the dc component of the P signal and added the Ploss from the Voltage controller block with it and named it as Posc And the Q is scaled by -1.Now these two signals along with the Valpha and Vbeta is given as input to the compensating current extraction function. Now the code for this function is given below:

```
function [Ic1,Ic2] = ICOM(Posc,q,V1,V2)
%#em1

Ic1 = (-1/(V1^2 + V2^2))*((Posc*V1)+(q*V2));
Ic2 = (-1/(V1^2 + V2^2))*((Posc*V2)-(q*V1));
```

Here we got the alpha and beta components of the compensating current. Finally we did an inverse CLARKE TRANSFORMATION to get a set of three phase currents and these currents are our reference current.

Pulse generator:

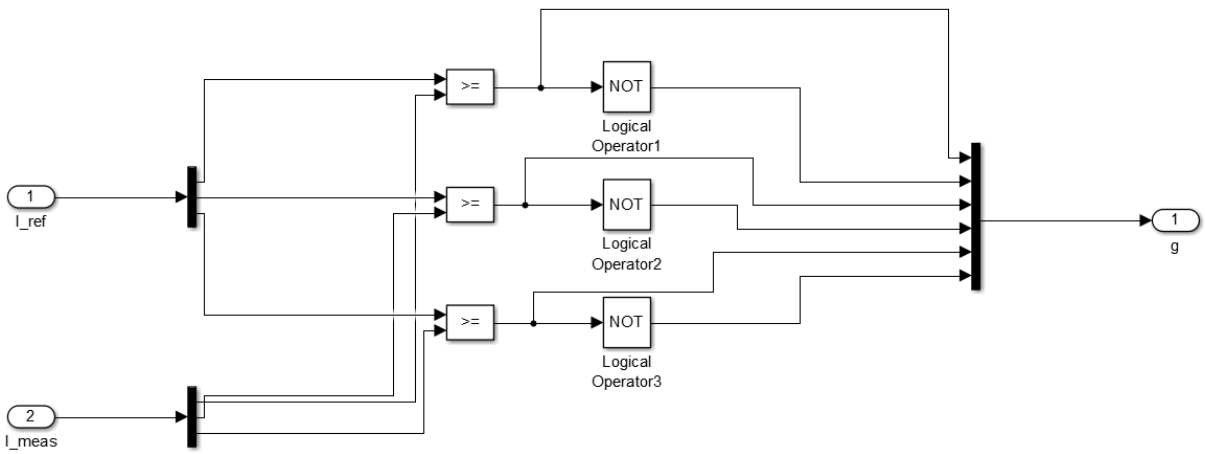

This block uses the hysteresis current control algorithm. It takes two inputs- I_ref and I_meas (Injected current).The algorithm compares the two currents and generates a set of six pulses for the inverter to switch. There are 2 pulses per phase.

Inverter:

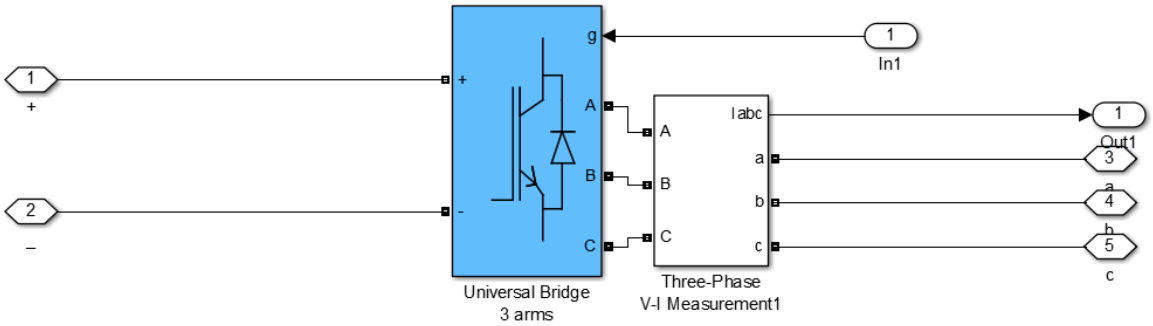

The inverter generates the three phase currents from the PV solar cell. And the switching of the inverter is controlled by the six pulses. The inverter is switching in such a way that the injected current nullifies the effect of the harmonics components in the grid current.

Observation of Waveforms:

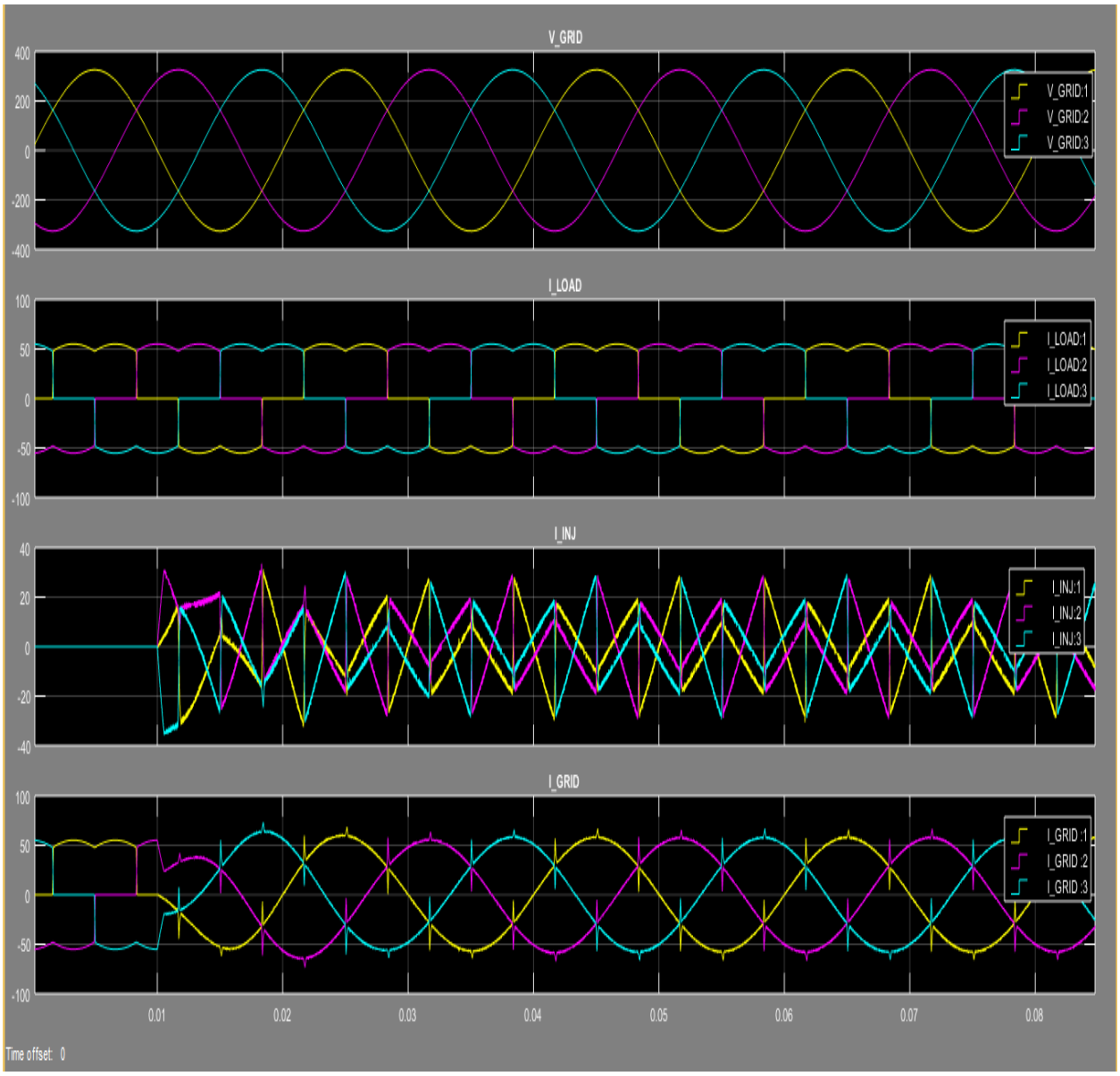

FIG: Grid Voltage, Load Current, Injected Current, Grid Current.

From the above graph,we see that the harmomics cancellation takes some time ,this is because circuit breaker takes some time to suuply the harmonic currents to the power grid.

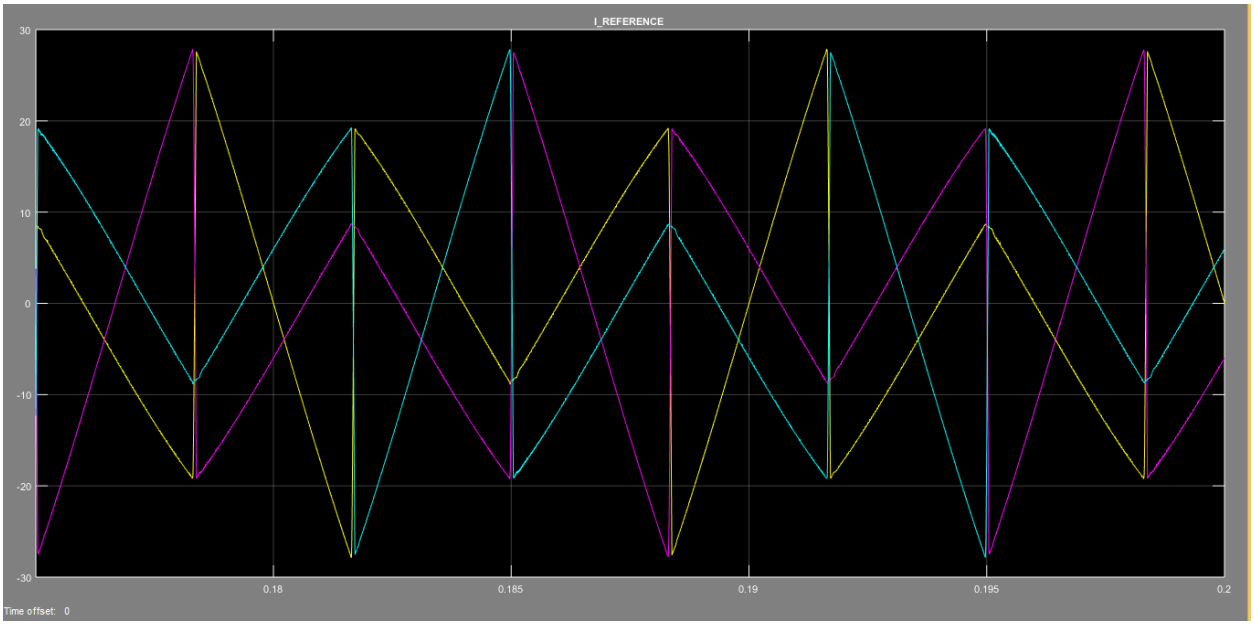

FIG: Reference Current

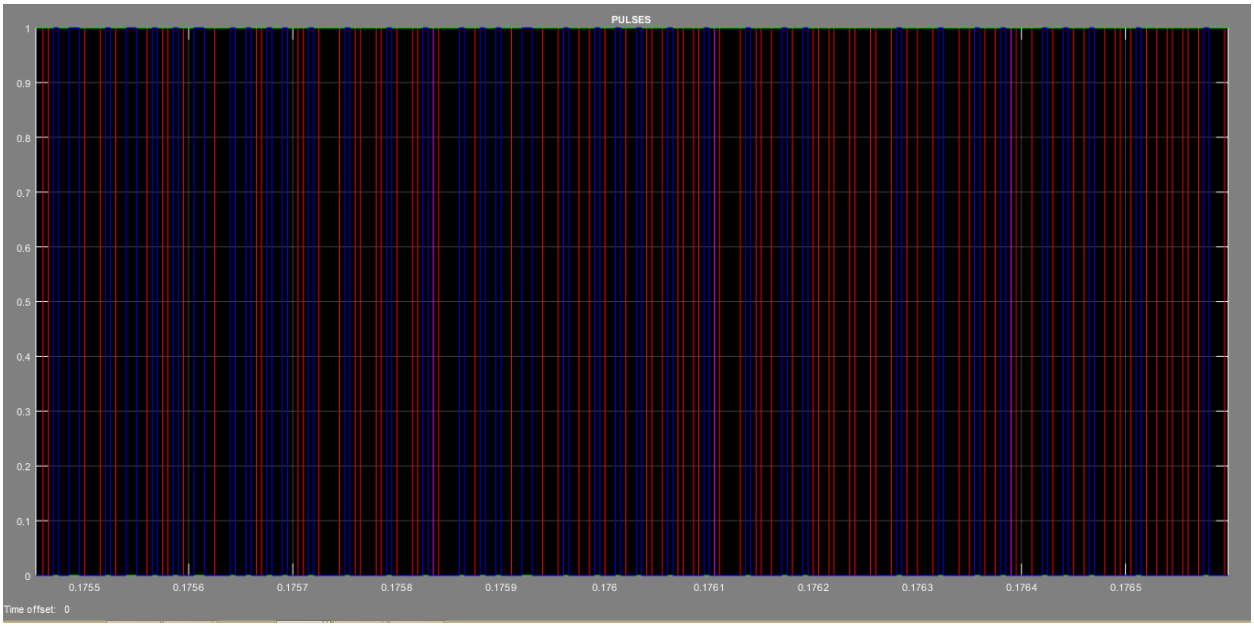

FIG: Pulses for Inverter

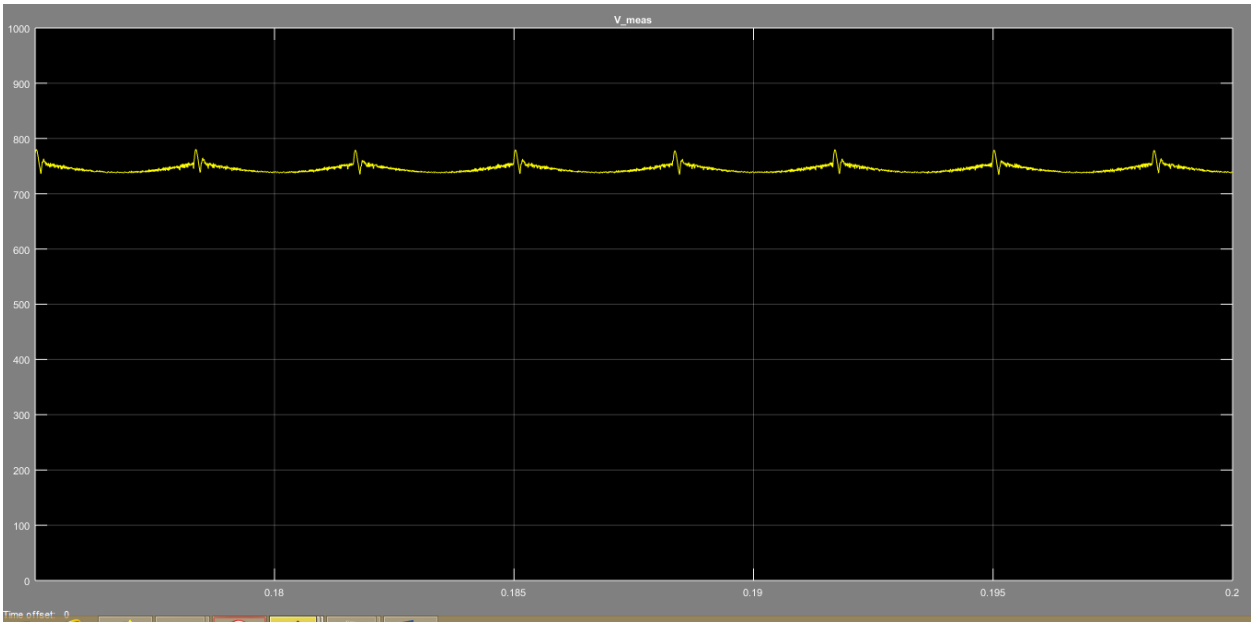

FIG: Reference Voltage.

THD calculation:

Before filtering:

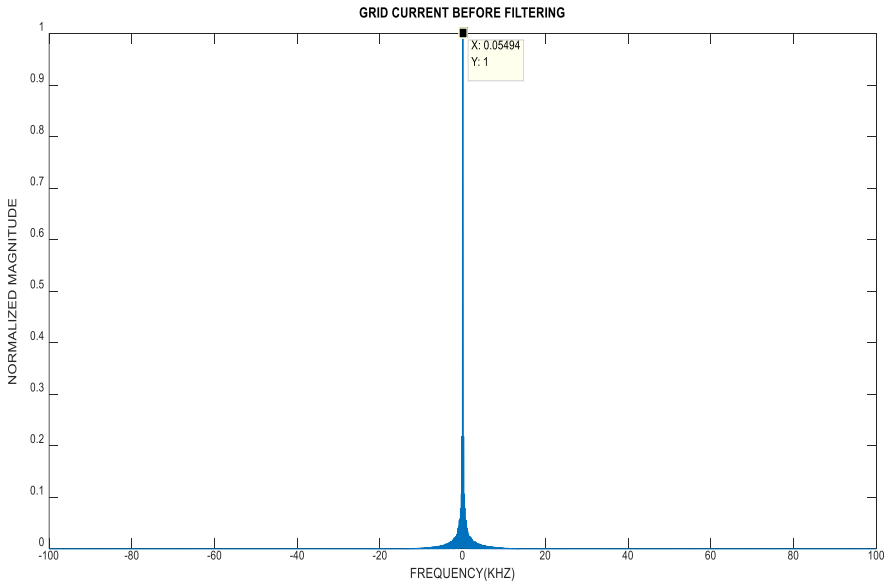

Here, THD is 28.86 %

After Filtering:

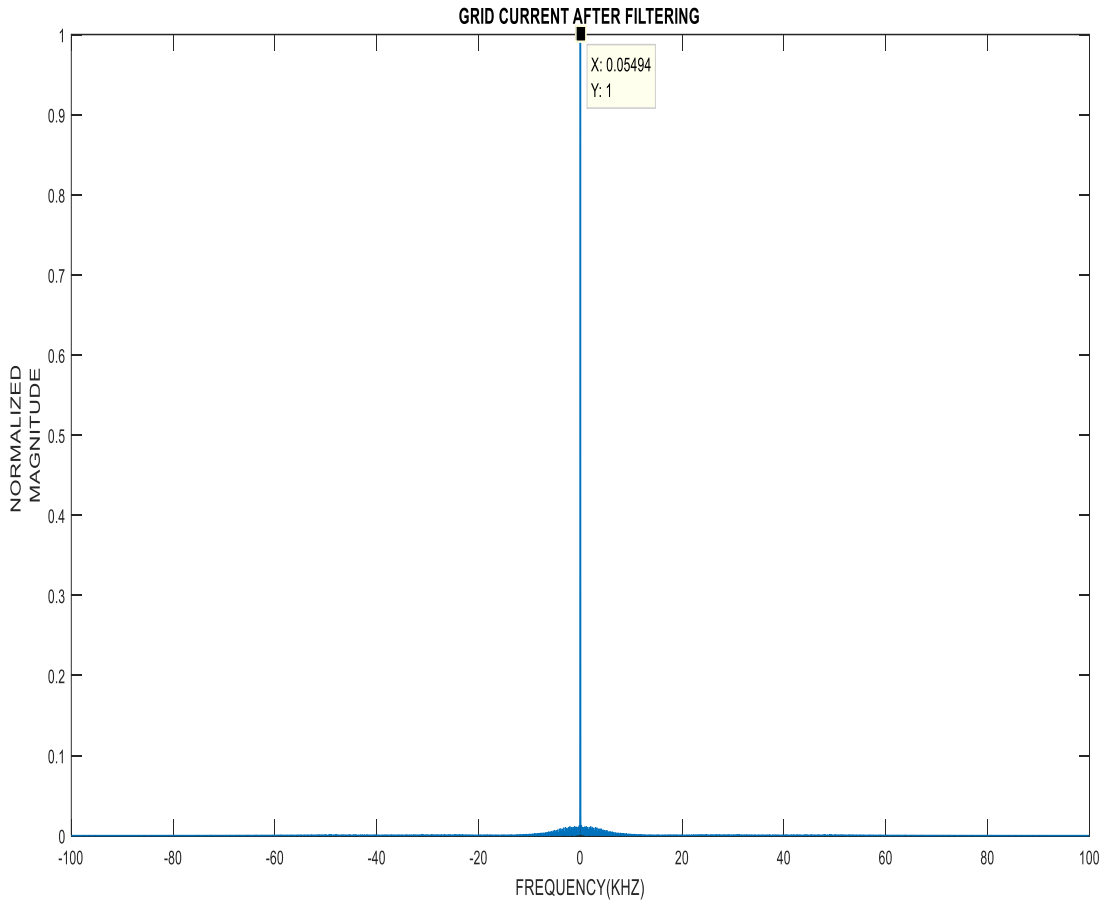

Here ,THD is 5.51%.

So, Reduction in THD (28.86-5.51)% = 23.35 %

The paper we followed showed that the reduction of THD was close to 24% approx.. So,Our system's efficiency is close to the paper we followed.

Conclusion:

This project addresses the problem of harmonic current and an efficient way to cancel the currents which includes usage of PV cell.Though the algorithm we used was hard to explain but it does the job and generates the exact opposite harmonic currents.The efficiency is close to the papers we followed.PV cells are used frequently in many country and our project shows a better approach of how to use PV cell not only to supply power to the grid but also to cancel the harmonic current and to ensure a better quality control.This project can be used in real life for creating efficient power usage.