WEEKLY PROGRESS REPORT

Mechatronic System Design (MEC483) — Course Project

PROJECT / PHASE

Smart Pick and Place Robot

DATE RANGE

31/4/2026 – 7/4/2026

TEAM MEMBERS

Maher Abo Abed (1087993) , Sabeeha Zainab Hasham (1089042), Basel Feras Ghunaim (1088912), Ahmad Nasser Alshehhi (1090882)

HOW ARE WE DOING THIS WEEK?

TOP WINS

- Design: Finalized the CAD model, used OpenSCAD to parametrically design spur gears, conducted an unknown torque analysis in SolidWorks to verify motor selection, and started the printing process.
- Began the procurement process.
- Begin and are exploring the use open-source frameworks. Started with Rviz and Moveit2 to conduct FK and IK, by creating a URDF model and importing it to Ubuntu and ROS 2.
- Collected, cleaned and labeled egg image data, then trained a YOLOv8 model and tested it in real time using OpenCV to detect eggs.

KEY BLOCKERS / RISKS

- Blocker : Limited university access, making gathering as a group extremely difficult.
- Risk: The components are pricey, so every step has to be studied carefully before executing.
- Blocker: Uncertainty around the future of the semester is creating hesitation and doubt.
- Blocker: The run time of training datasets is massive, sometimes can take up to a day depending on the number of images used to train

PROJECT HEALTH

Scope	Under Execution
Schedule	Potential Delays
Fabrication & Prototyping	Under Execution

OPEN ISSUES

3 Active

Project Schedule (Gantt)

Agile Gantt chart1.xlsx

ISSUES, RISKS, AND ACTION ITEMS

TOP ISSUES (BLOCKING PROGRESS)

- Due to current circumstances, teammates cannot meet in person to discuss project planning, this has resulted in Microsoft Teams meetings occurring 1-2 times a week. This can be limiting as only one teammate has access to the objects that need to be picked up by the arm.
- No access to university is slowing down work efforts, and overall progress.

MITIGATIONS / DECISIONS NEEDED

- Conduct virtual meetings often.
- Constant communication and updates.
- Each member should take their own initiatives.
- Aim to make any sort of progress, regardless of how small or big.

ACTION ITEMS (NEXT 7 DAYS)

ID	ACTION ITEM DESCRIPTION	MEMBER	WEEK DUE
A1	Investigate how to mitigate issues experienced using vision detection	Sabeeha	Week 6
A2	Finish the FK and IK kinematics	Maher	Week 6
A3	Finalize gripper design + Pneumatic Integration	Basel	Week 6
A4	Finalize gripper design + Pneumatic Integration	Ahmad	Week 6

INDIVIDUAL UPDATES

WEEKLY PROGRESS & NEXT STEPS

MEMBER 1

Maher Abo Abed

MEMBER 2

Sabeeha Zainab Hasham

MEMBER 3

Basel Feras Ghunaim

MEMBER 4

Ahmad Nasser Alshehhi

MEMBER 1: Maher Abo Abed

ACCOMPLISHED (SINCE LAST REPORT)

- Finalized the CAD model.
- Parametrically designed spur gears using OpenSCAD.
- Conducted unknown torque analysis using SolidWorks to verify motor selection.
- Prepared STL files.
- Acquired few components.
- Preparing to use ROS 2 open-source frameworks.
- Created a URDF code
- Imported the code to Rviz and Moveit2, to conduct FK and IK.

IN PROGRESS

- Conducting the FK and IK
- Printing
- Further procurement

NEXT WEEK PLAN

- Mechanical assembly
- Finish the FK and IK
- Control the motors, by linking them to the classifier model.

EVIDENCE

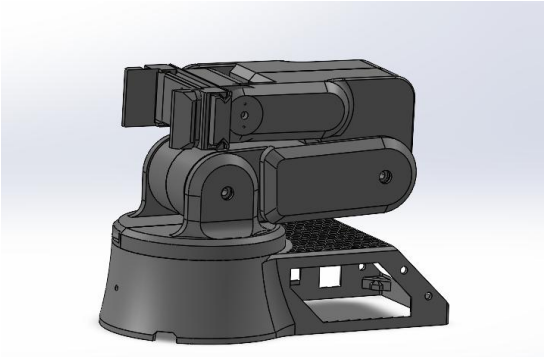

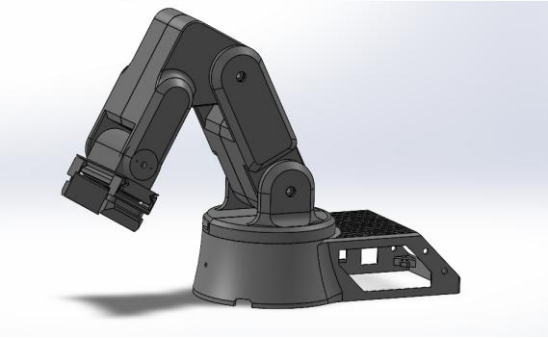

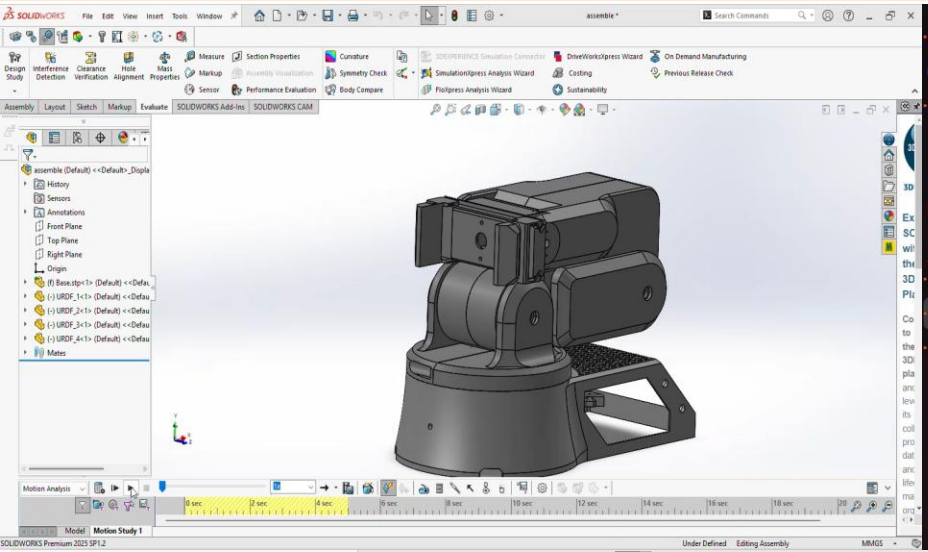
SOLIDWORKS
assemble*
Design Study
Interference Detection
Clearance Verification
Hole Alignment
Mass Properties
Measure
Section Properties
Sensor
Performance Evaluation
Curvature
Symmetry Check
Body Compare
3DEXPERIENCE Simulation Connector
SimulationXpress Analysis Wizard
FloXpress Analysis Wizard
DriveWorksXpress Wizard
Costing
Sustainability
On Demand Manufacturing
Previous Release Check
Assembly
Layout
Sketch
Markup
Evaluate
SOLIDWORKS Add-Ins
SOLIDWORKS CAM
Motion Analysis
Model
Motion Study 1
SOLIDWORKS Premium 2025 SP1.2
Under Defined
Editing Assembly
MMGS

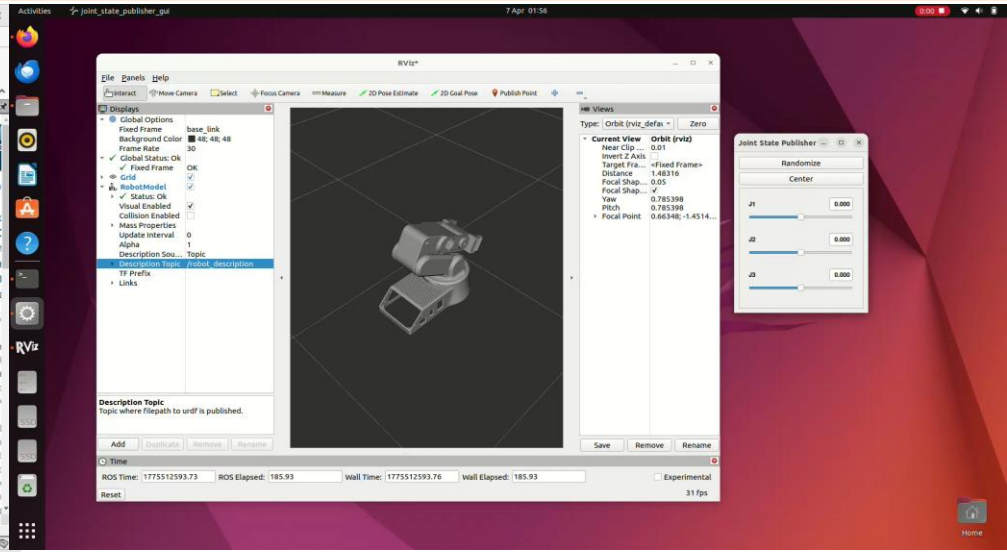
Activities
joint_state_publisher_gui
7 Apr 01:56
RViz*
File Panels Help
Interact
Move Camera
Select
Focus Camera
Measure
2D Pose Estimate
2D Goal Pose
Publish Point
Displays
Global Options
Fixed Frame
base_link
Background Color
48; 48; 48
Frame Rate
30
Global Status: Ok
Grid
RobotModel
Status: Ok
Visual Enabled
Collision Enabled
Mass Properties
Update Interval
0
Alpha
1
Description Topic
/robot_description
TF Prefix
Links
Description Topic
Topic where filepath to urdf is published.
Add
Duplicate
Remove
Rename
Views
Type: Orbit (rviz_defa
Zero
Current View
Orbit (rviz)
Near Clip ...
0.01
Invert Z Axis
Target Fra...
<Fixed Frame>
Distance
1.48316
Focal Shap...
0.05
Focal Shap...
Yaw
0.785398
Pitch
0.785398
Focal Point
0.66348; -1.4514...
Save
Remove
Rename
Time
ROS Time: 1775512593.73
ROS Elapsed: 185.93
Wall Time: 1775512593.76
Wall Elapsed: 185.93
Experimental
Reset
31 fps
Joint State Publisher
Randomize
Center
J1
0.000
J2
0.000
J3
0.000
Home

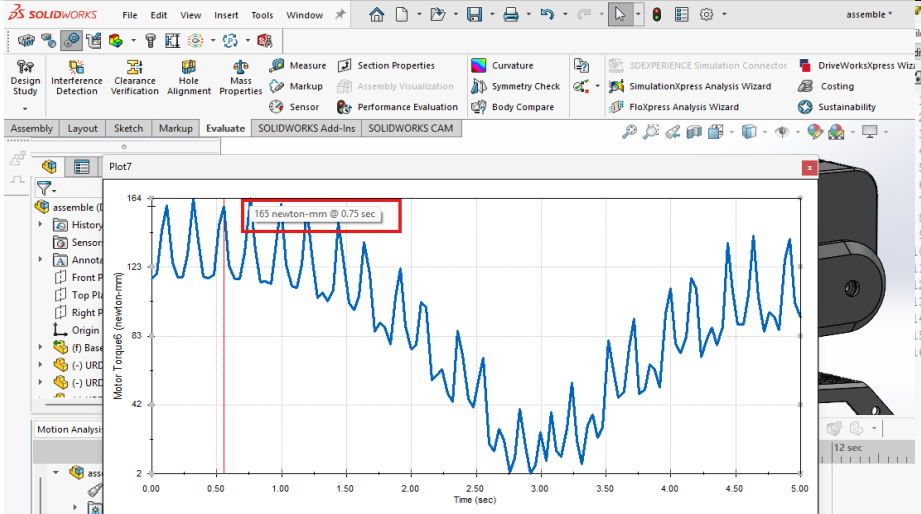
SOLIDWORKS
File Edit View Insert Tools Window
assemble*
Design Study
Interference Detection
Clearance Verification
Hole Alignment
Mass Properties
Measure
Section Properties
Sensor
Performance Evaluation
Curvature
Symmetry Check
Body Compare
3DEXPERIENCE Simulation Connector
SimulationXpress Analysis Wizard
FloXpress Analysis Wizard
DriveWorksXpress Wizard
Costing
Sustainability
Assembly
Layout
Sketch
Markup
Evaluate
SOLIDWORKS Add-Ins
SOLIDWORKS CAM
Plot7
165 newton-mm @ 0.75 sec
Motor Torque6 (newton-mm)
164
123
83
42
2
0.00
0.50
1.00
1.50
2.00
2.50
3.00
3.50
4.00
4.50
5.00
Time (sec)
Motion Analysi
12 sec

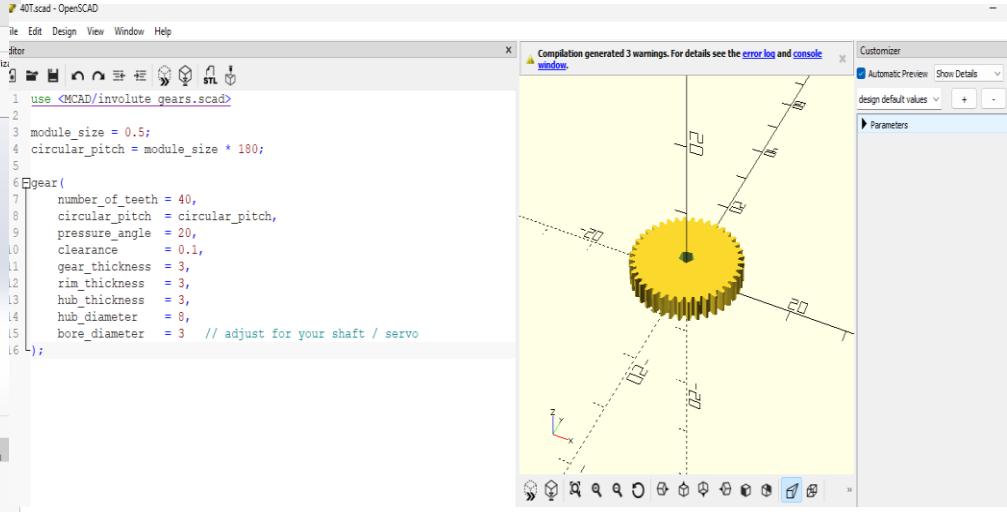
40T.scad - OpenSCAD
File Edit Design View Window Help
Editor
use <MCAD/involute_gears.scad>
module_size = 0.5;
circular_pitch = module_size * 180;
gear(
number_of_teeth = 40,
circular_pitch = circular_pitch,
pressure_angle = 20,
clearance = 0.1,
gear_thickness = 3,
rim_thickness = 3,
hub_thickness = 3,
hub_diameter = 8,
bore_diameter = 3 // adjust for your shaft / servo
);
Compilation generated 3 warnings. For details see the error log and console window.
Customizer
Automatic Preview
Show Details
design default values
Parameters

MEMBER 2: Sabeeha Hasham

ACCOMPLISHED (SINCE LAST REPORT)

- Found a series of datasets for the egg, nut and bolt, downloaded, filtered the dataset to only to use appropriate images (from 800 images to 450), then annotated the dataset for the egg – this meant the corresponding annotations were downloaded in the YOLO format label file from cvat.
- Installed PyCharm to train the Yolov8 model using the ultralytics library and tested it – used 450 images to train for the egg, dataset was clean and split into image files and their corresponding label txt files.
- Training for 100 epochs showed higher accuracy using the live feed using openCV.

IN PROGRESS

- To use the datasets for the other objects that I have and merge it with the egg one so it can identify multiple objects that we are using – test and ensure the accuracy is high.

NEXT WEEK PLAN

- Object detection refining – ensure it works for the other objects that we have using the data sets collected

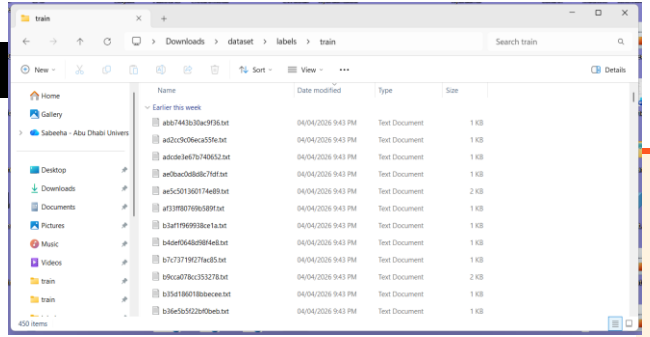

EVIDENCE (SHOW, DON'T TELL)

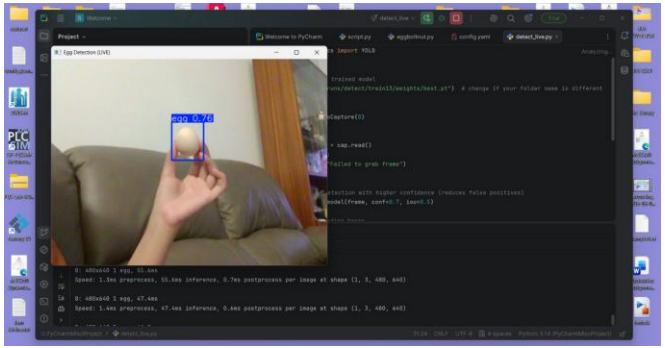

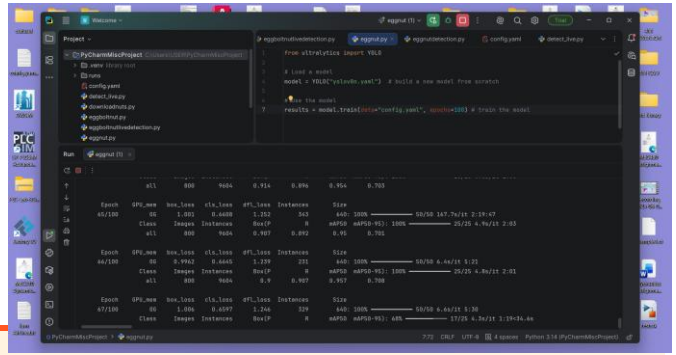

HELP NEEDED / QUESTIONS

MEMBER 3: Basel Feras Ghunaim

ACCOMPLISHED (SINCE LAST REPORT)

- Completed evaluation of motion control strategies (AccelStepper vs custom step generation).
- Finalized decision to use stepper motor step-counting with homing as the primary positioning method.
- Conducted detailed analysis of encoder integration options (single encoder, dual encoder, and comparison with motor step tracking).
- Refined hybrid end-effector concept (mechanical gripper + suction cup) and validated feasibility for all target objects.
- Investigated vacuum pump specifications and confirmed suitability of electric vacuum pump over compressed air systems.

IN PROGRESS

- Implementing initial stepper motor control logic and testing basic motion behavior.
- Evaluating potential positioning errors due to gear backlash and belt elasticity.
- Optimizing suction cup placement and integration within the gripper design.
- Reviewing control sequence timing for coordinated pick-and-place operations.

MEMBER 4: Ahmed Alshehhi

ACCOMPLISHED (SINCE LAST REPORT)

- Reviewed research papers and technical resources on robotic gripper design.
- Analyzed different gripper types (mechanical, soft grippers, and vacuum-based systems).

IN PROGRESS

- Selecting the most suitable gripper design based on object shape, weight, and fragility
- Studying methods to control gripping force to ensure safe handling of delicate objects (e.g., egg)

NEXT WEEK PLAN

- Finalize the gripper design and add it to the CAD model
- Begin testing basic gripping concepts using a simple prototype

HELP NEEDED / QUESTIONS

-

WRAP-UP: WHAT WE NEED FROM THE INSTRUCTOR / STAKEHOLDERS

DECISIONS REQUESTED

- Gripper design
- Pneumatic integration
- Exploring other required features such as a mobile robot and how this can be integrated

QUESTIONS / FEEDBACK

- Could you guide us on inserts and threading's for 3D parts. Is it necessary, if so, what is the best approach?

ACTION ITEMS FOLLOW-UP

- Gripper design
- Pneumatic integration
- Exploring other required features such as a mobile robot and how this can be integrated
- Building on the computer vision model.

APPENDIX

- https://maherrrrr99.github.io/maherrrrr99/
- https://sabeehahasham.github.io/
- https://basel-ghunaim.github.io/
- https://ahmed1090822.github.io/Ahmed109.github.io/