Electrical Actuation Systems

Chapter 9 Synthesis: From Solid-State Switches to Precision Stepper Motors

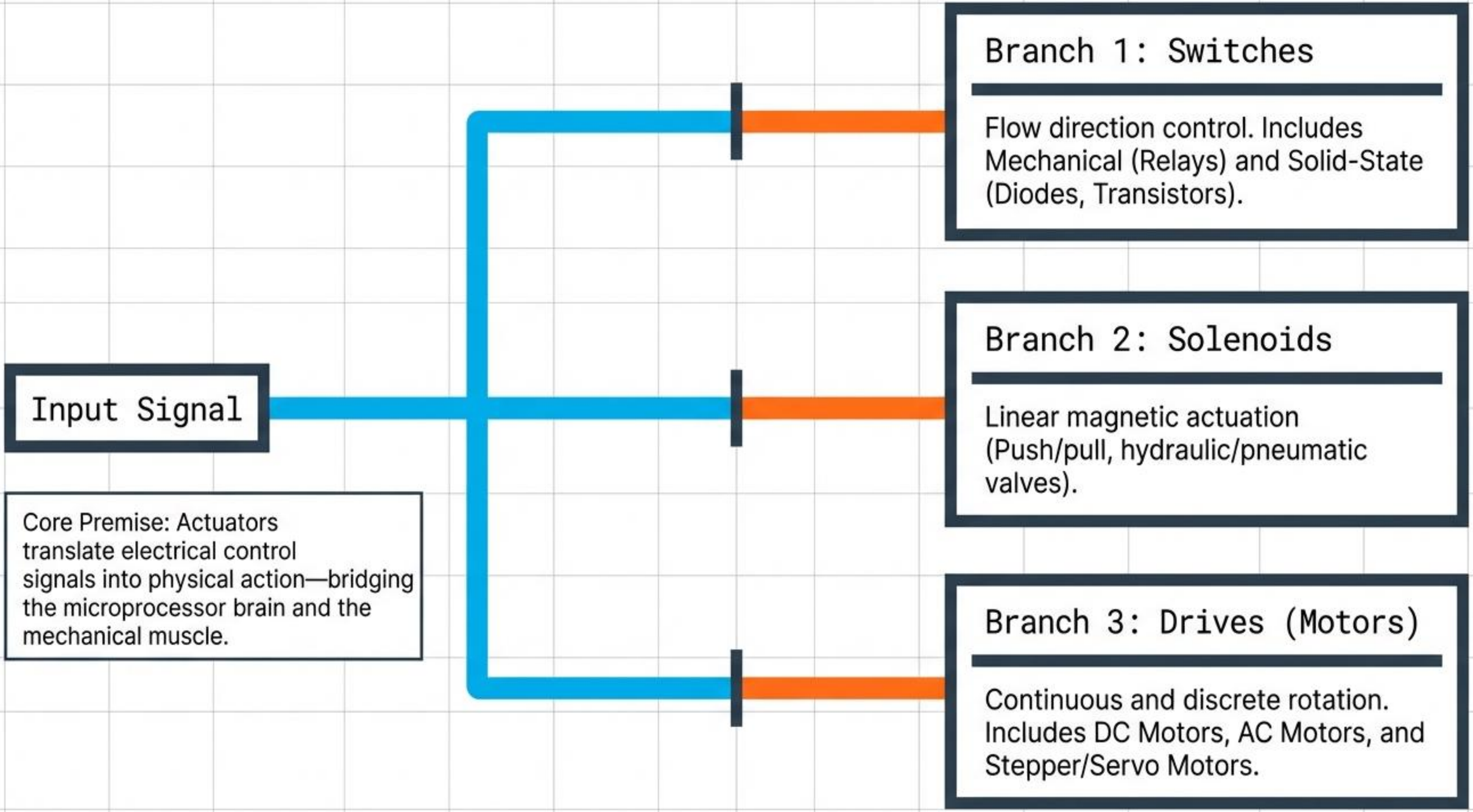
Input Signal
Core Premise: Actuators translate electrical control signals into physical action—bridging the microprocessor brain and the mechanical muscle.
Branch 1: Switches
Flow direction control. Includes Mechanical (Relays) and Solid-State (Diodes, Transistors).
Branch 2: Solenoids
Linear magnetic actuation (Push/pull, hydraulic/pneumatic valves).
Branch 3: Drives (Motors)
Continuous and discrete rotation. Includes DC Motors, AC Motors, and Stepper/Servo Motors.

Mechanical Relay

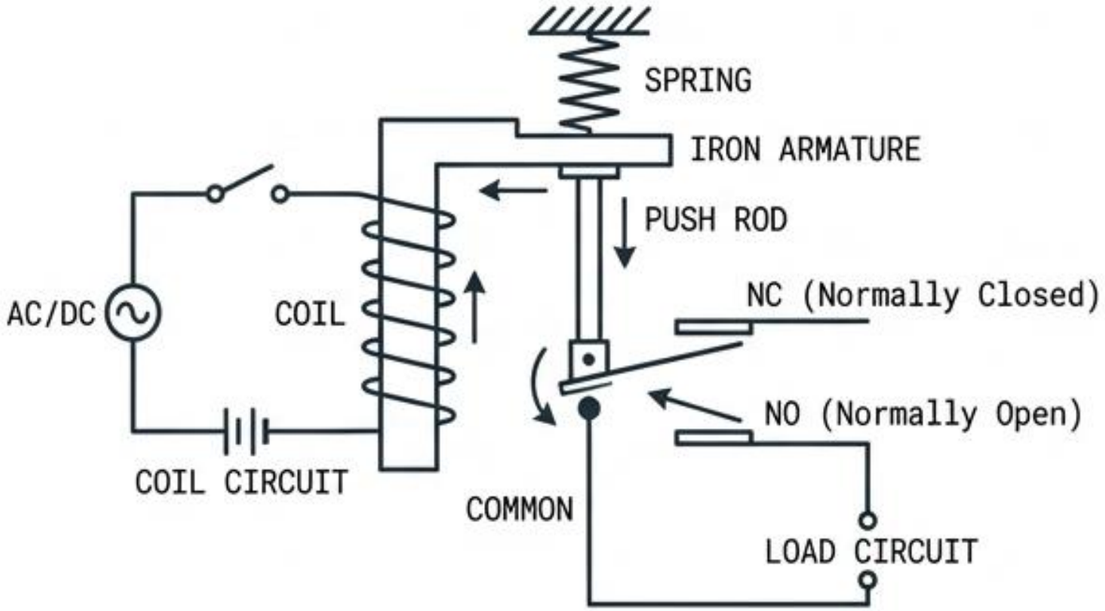

Mechanism: Electromagnetic coil physically moves contacts.
Engineering Use-Case: Superior for high-power electrical isolation.
Vulnerability: Susceptible to mechanical wear and contact bounce.

Solid-State Gate

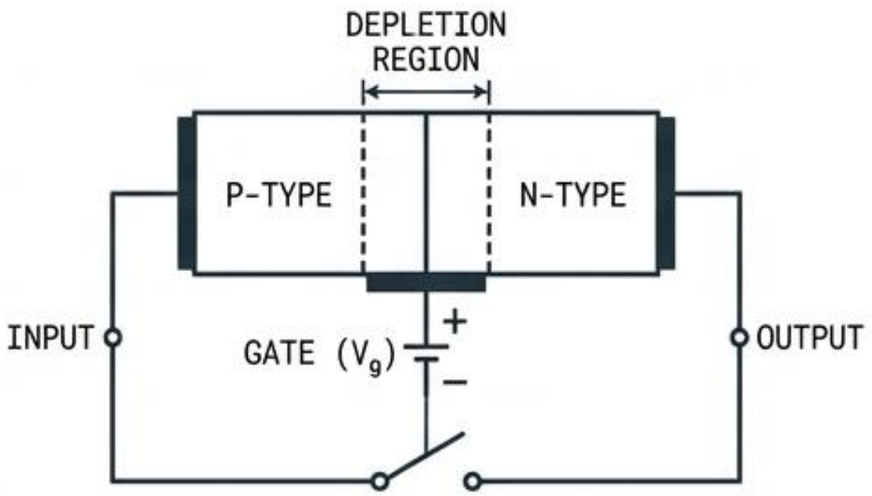

Mechanism: Uses semiconductor materials to control current flow.
Engineering Use-Case: Zero moving parts, high-speed switching, entirely bounce-free.
Vulnerability: Susceptible to heat generation and inductive kickback from motors.

Component	Control Mechanism	Power & Speed	Defining Trait
Thyristor	Triggered by gate current.	Handles high power, slow frequency.	Latches ON until current drops (e.g., CF106D max off-state 400V).
Bipolar Junction Transistor (BJT)	Current-controlled base (npn/pnp).	Medium power, fast switching.	Often paired (Darlington configurations) to multiply current gain.
MOSFET	Voltage-controlled gate (n/p-channel).	Extremely fast.	No continuous gate current required, simplifying drive circuitry. Standard for modern microcontrollers.
Diode	Passive one-way valve.	N/A	Crucial for flyback protection against inductive voltage spikes when switching motor loads.

Linear Actuation: The Solenoid

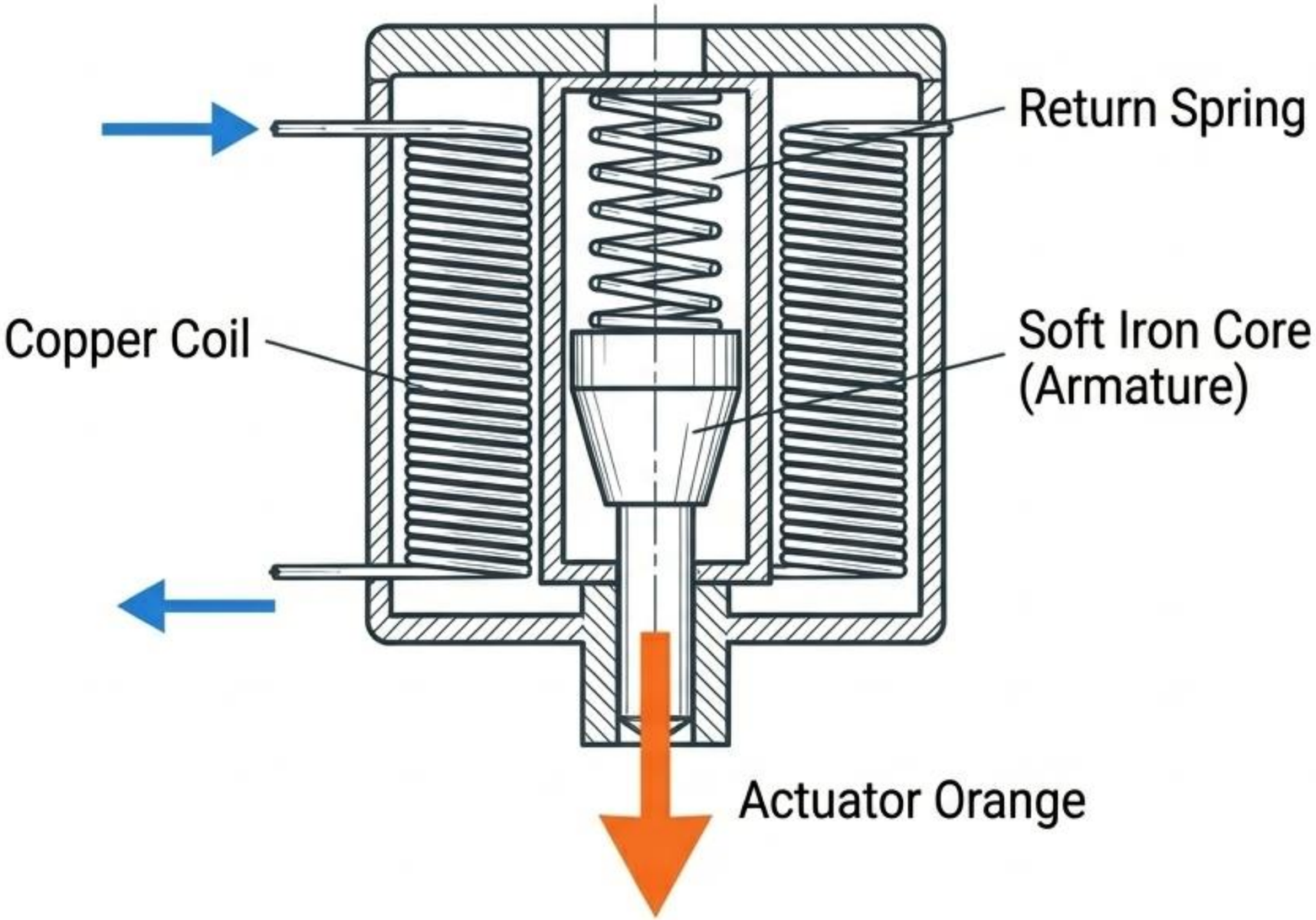

Operating Principle: Current driven through the coil creates a localized magnetic field, aggressively pulling the soft iron core into the center of the coil.

Application: The primary electromechanical driver for shifting spools in pneumatic and hydraulic directional control valves.

Behavior: Quick, snap-action linear motion.

DC Motors: Principles & Back E.M.F.

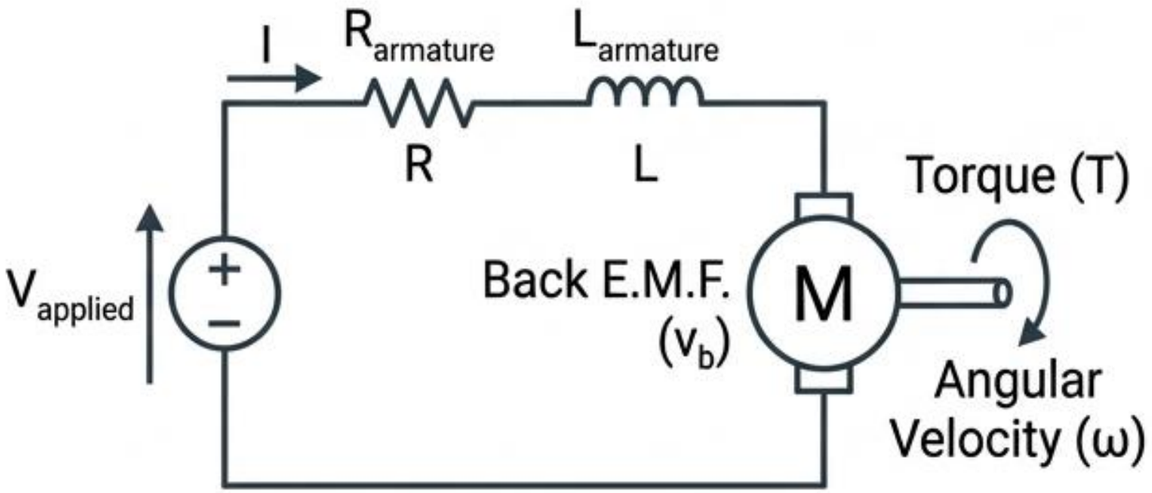

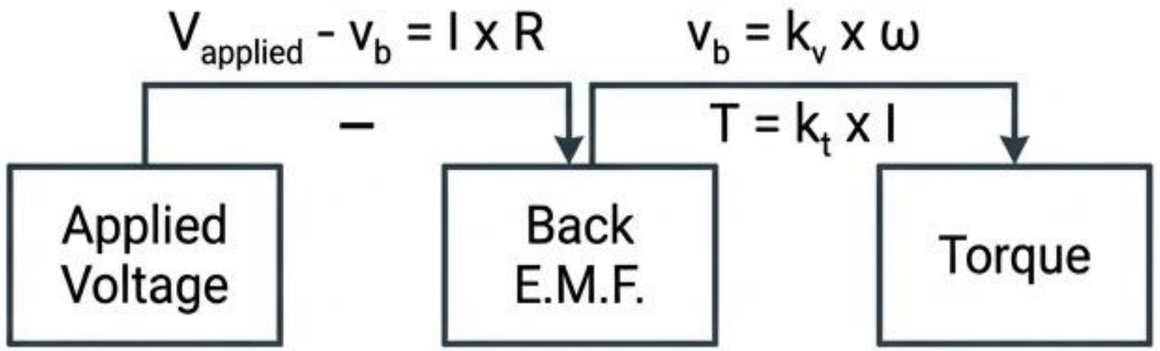

The Lorentz Force

A current-carrying conductor in a magnetic field experiences a physical force, generating rotation.

Back E.M.F.

As the rotor spins, it acts as a generator, creating a voltage opposing the supply.

$V_{applied} - v_b = I \times R$

Speed Constant

$v_b = k_v \times \omega$
(Back E.M.F. is directly proportional to angular velocity).

PWM Control

Speed is dictated by Pulse Width Modulation—chopping the DC supply into high-frequency pulses to vary average voltage without sacrificing torque.

Brushed DC Motor Configurations

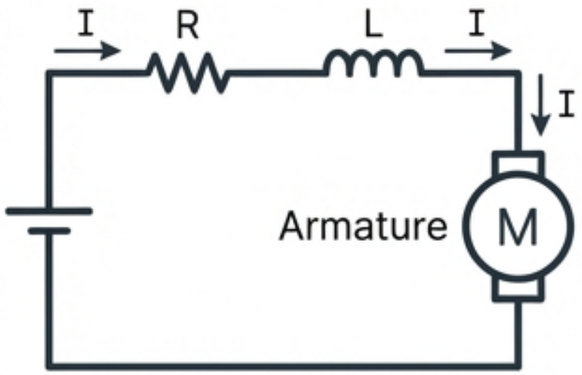

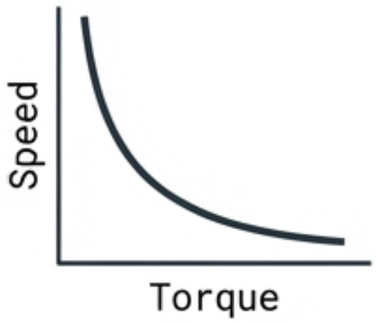

Profile: Massive starting torque. Speed drops rapidly as load increases. Warning: Will accelerate until it destroys itself if operated without a load.

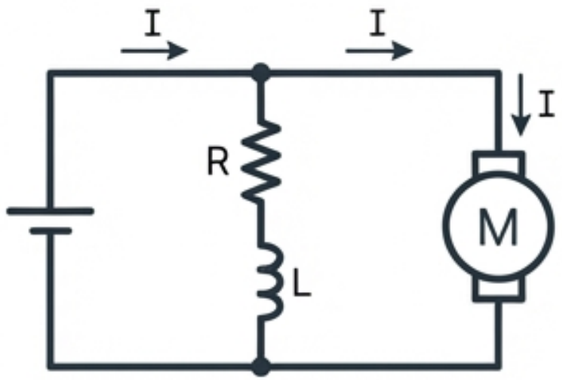

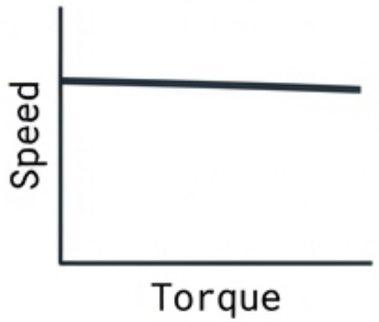

Profile: Low starting torque. Maintains excellent, constant speed regulation regardless of load variations.

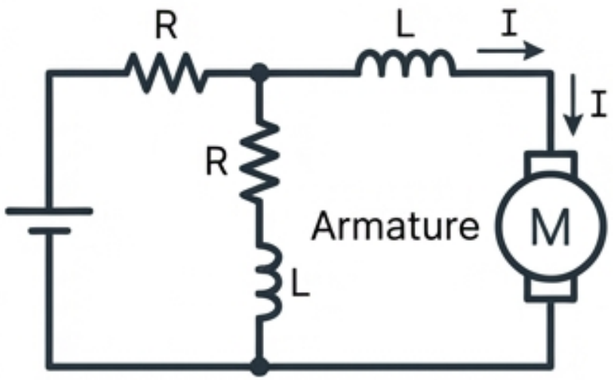

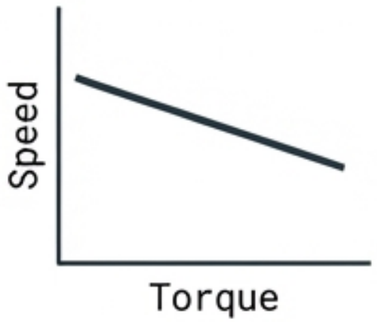

Profile: The hybrid. High starting torque combined with stable speed regulation.

Directional Control: The H-Bridge

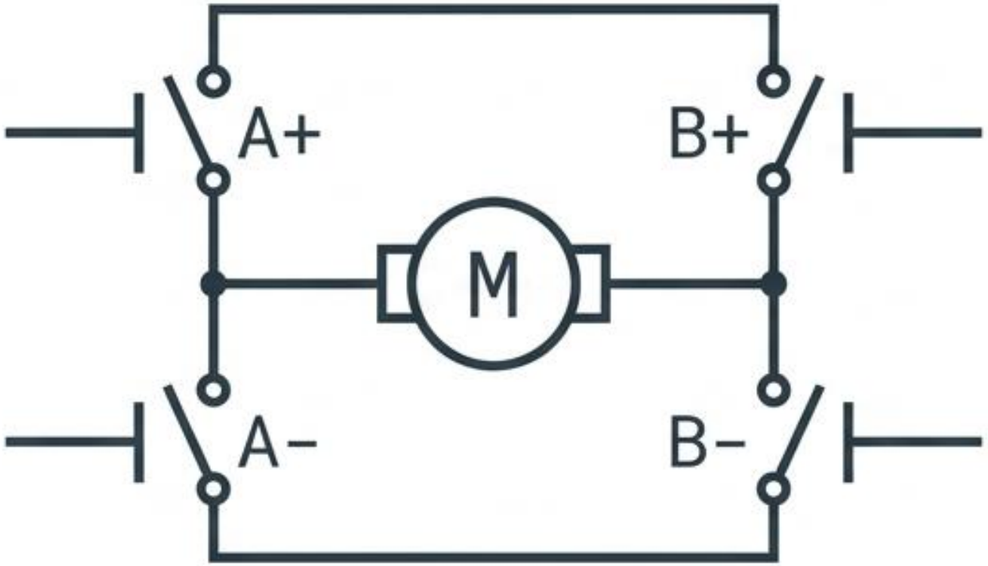

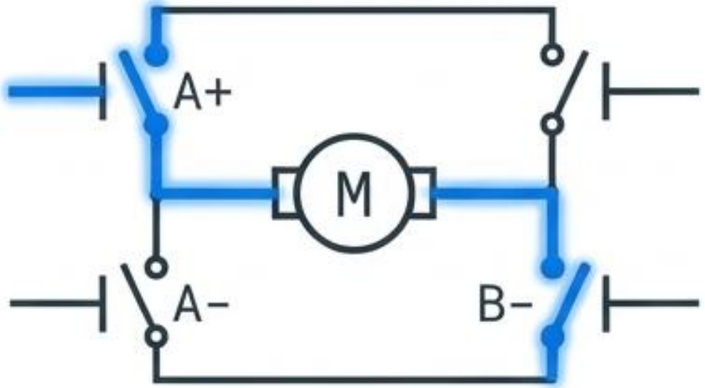

Forward State

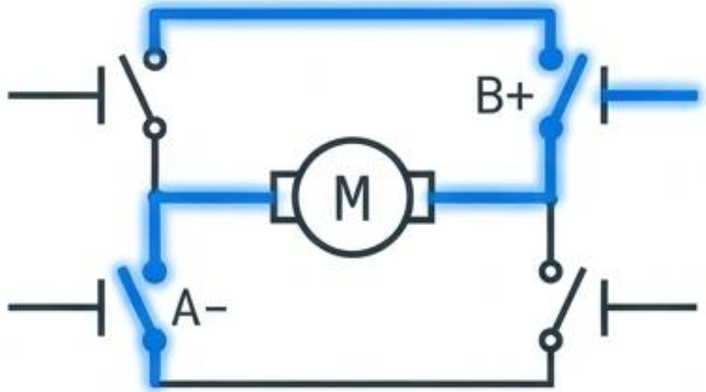

Reverse State

The Problem: Reversing a DC motor requires reversing the polarity of the applied voltage using digital logic.

Implementation: Often achieved via ICs (e.g., L293 or LM18293 dual H-bridge drivers).

Critical Rule: Never close A+ and A- simultaneously—this creates a **catastrophic short circuit**.

Brushless DC (BLDC) Motors

Brushed Motor

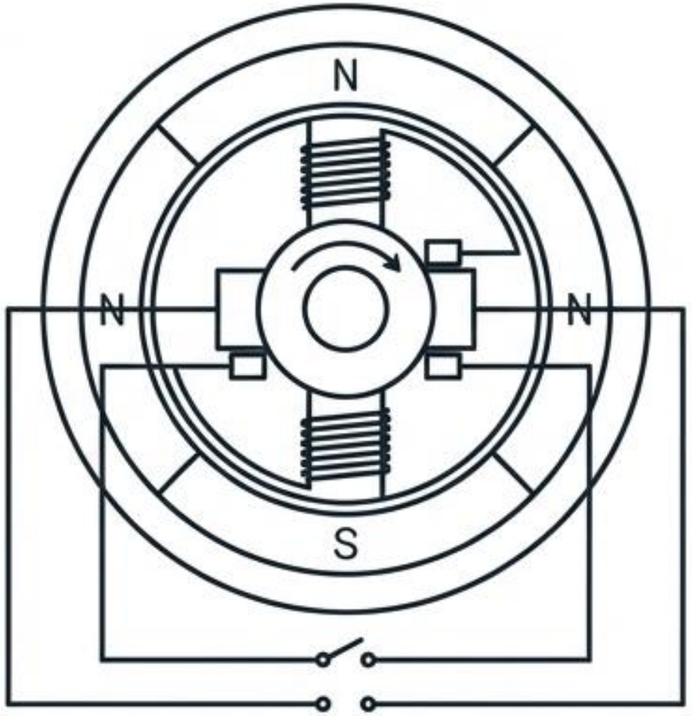

BLDC Motor

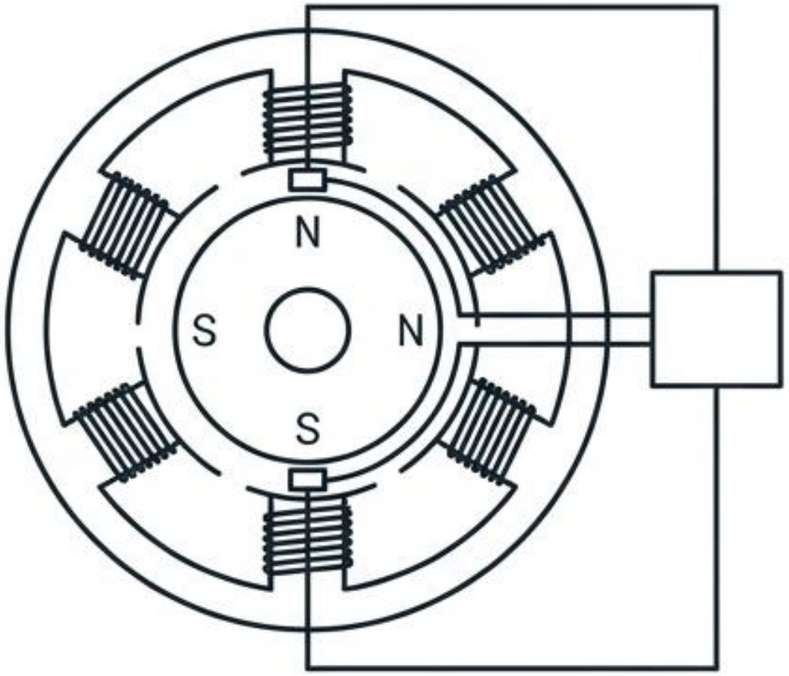

The Shift: Eliminates physical brushes (and the associated wear, sparks, and noise) in favor of electronic commutation.

Operation: Hall-effect sensors detect the exact angle of the permanent-magnet rotor. A microcontroller fires the surrounding stator coils in a precise sequence to continuously pull the rotor forward.

Result: Extremely high speed, quiet operation, and low maintenance (e.g., Mineabea BLDC15P06 specification).

AC Motors: The Rotating Field

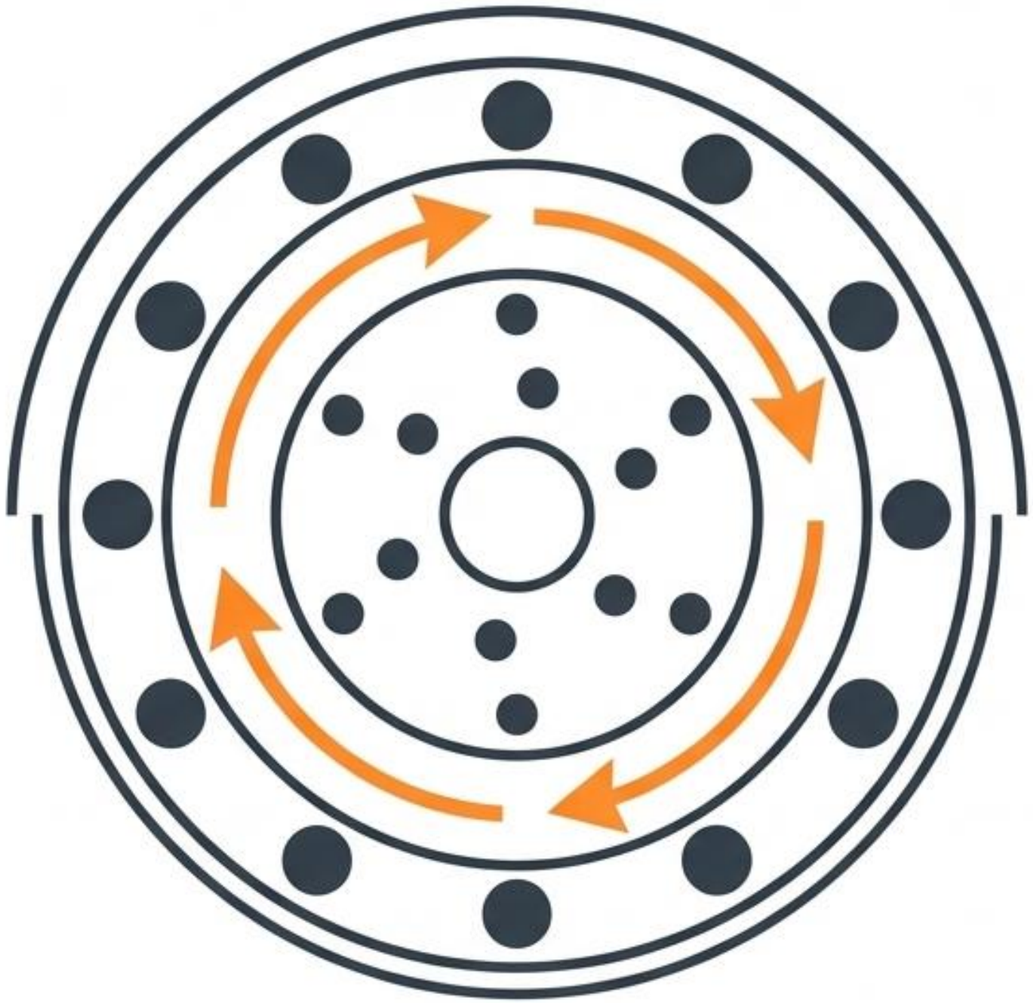

The Principle: Alternating current creates a rotating magnetic field in the stator. By electromagnetic induction, this creates a current in the rotor, generating torque without any direct electrical connection.

Synchronous Speed: The exact rotational speed of the magnetic field, rigidly tied to the AC supply frequency (e.g., 50Hz supply = 50 rev/sec field rotation).

The Slip Requirement: The motor is not self-starting. Furthermore, the rotor must always spin slightly slower than the synchronous field (typically 1-3% slip) to maintain the continuous induction of torque.

Stepper Motors: Anatomy of Precision

Core Function: Rotates in discrete, precise angular steps (e.g., 1.8° giving 200 steps per revolution). Ideal for open-loop positioning without a feedback encoder.

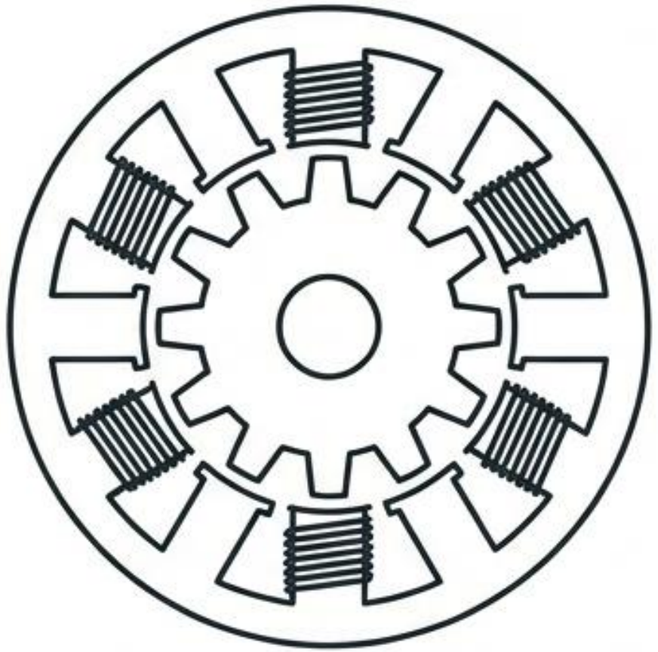

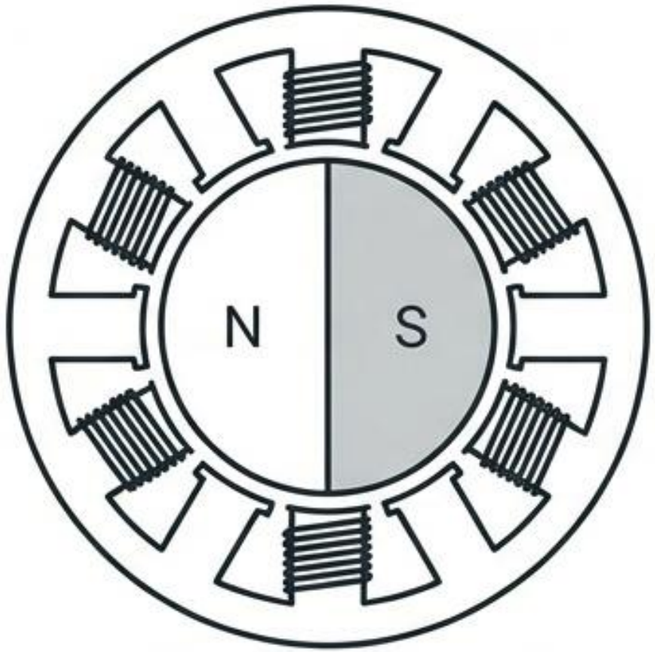

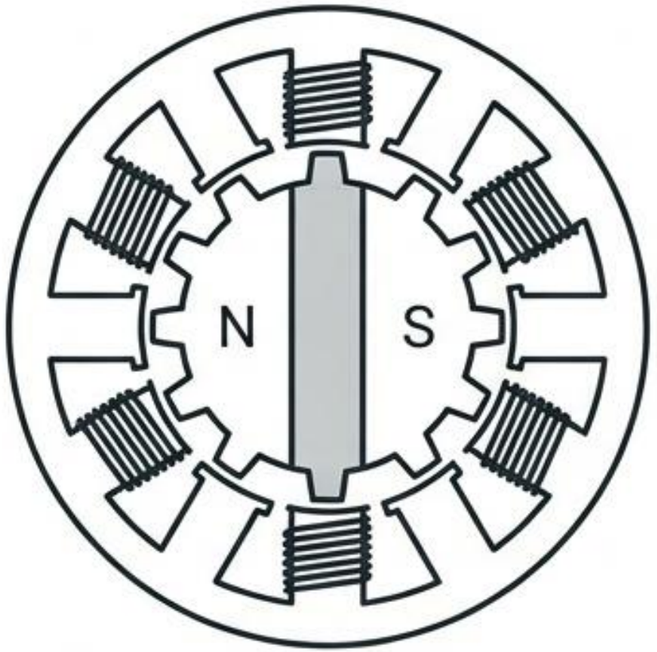

Variable Reluctance (VR): An unmagnetized iron rotor moves to align with energized stator poles, seeking the path of least magnetic resistance.

Permanent Magnet (PM): A magnetized rotor aligns with alternating stator polarities.

Hybrid: Combines both. A toothed, magnetized rotor allows for extremely fine micro-step angles.

Stepper Control: The Logic Sequence

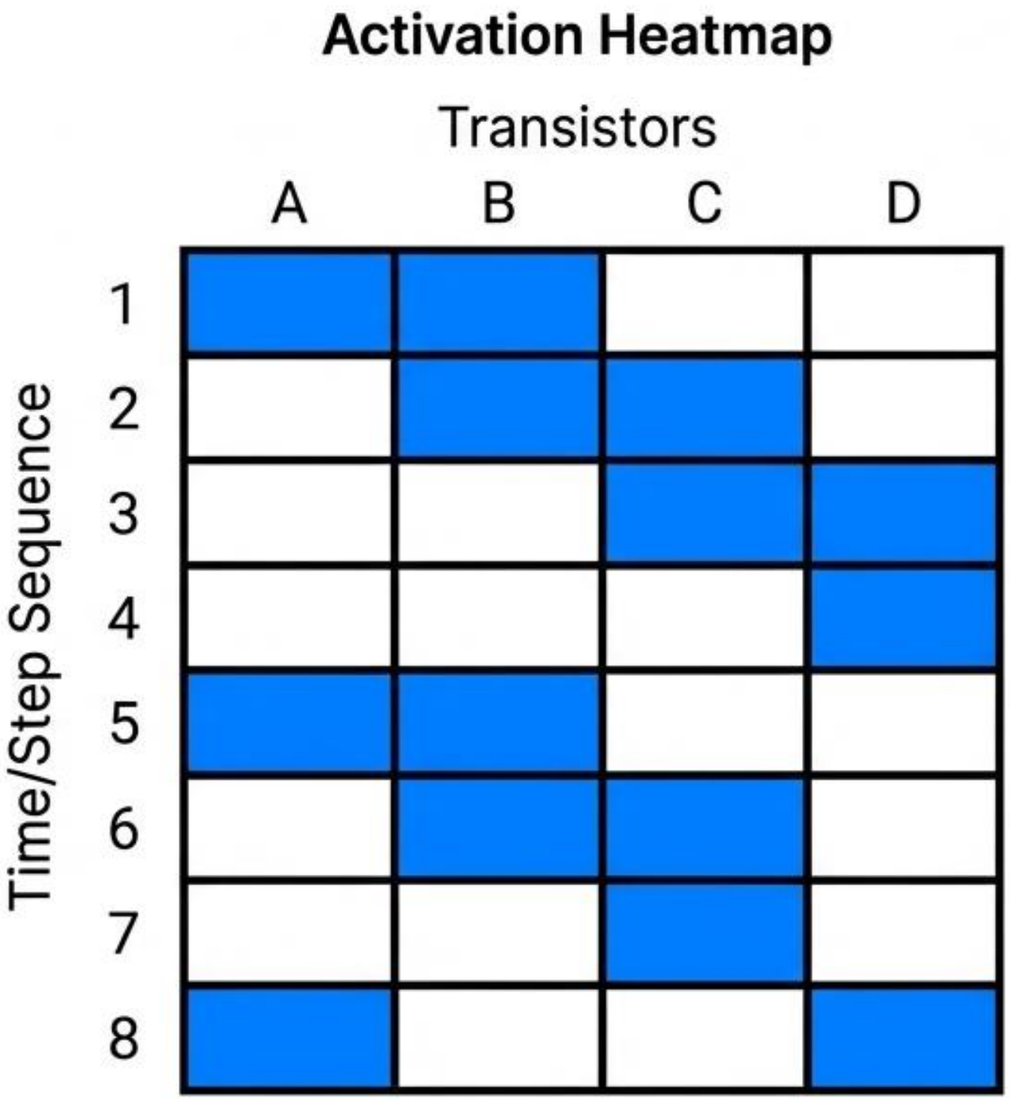

Wiring: Bipolar requires full H-bridges to reverse coil current; Unipolar uses center-tapped coils to simplify switching to just four transistors.

Full-Stepping: Energizing one (or two) distinct phases at a time for standard angular resolution.

Half-Stepping/Micro-Stepping: Alternating between single and dual-phase energization. This cuts the step angle in half, smoothing out mechanical motion and dramatically increasing rotational resolution.

Motor Selection Phase 1: Inertia Matching

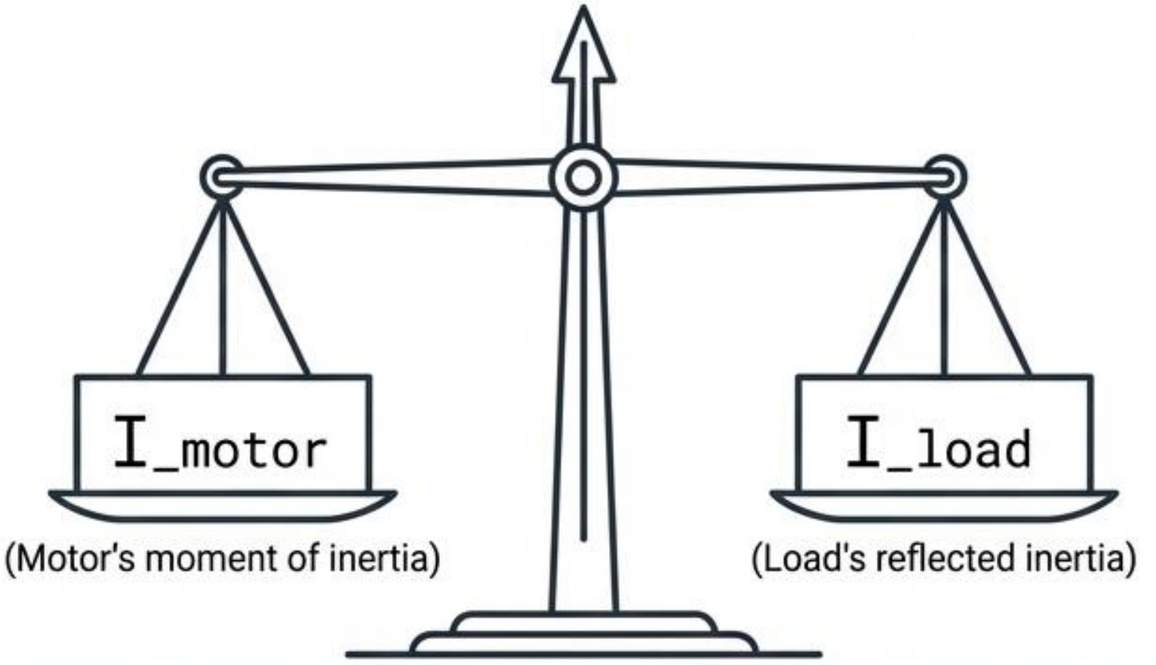

The Golden Rule:
For maximum power transfer and fastest acceleration, the moment of inertia of the motor must perfectly match the referred moment of inertia of the load.

The Governing Equation: $T_{total} = (I_{motor} + I_{load}) \times \alpha$

The Role of Gearing: When inertias are mismatched, gear ratios (n) are introduced to artificially scale the load's reflected inertia ($1/n^2$) into the motor's optimal operating range.

Motor Selection Phase 2: Torque & Power

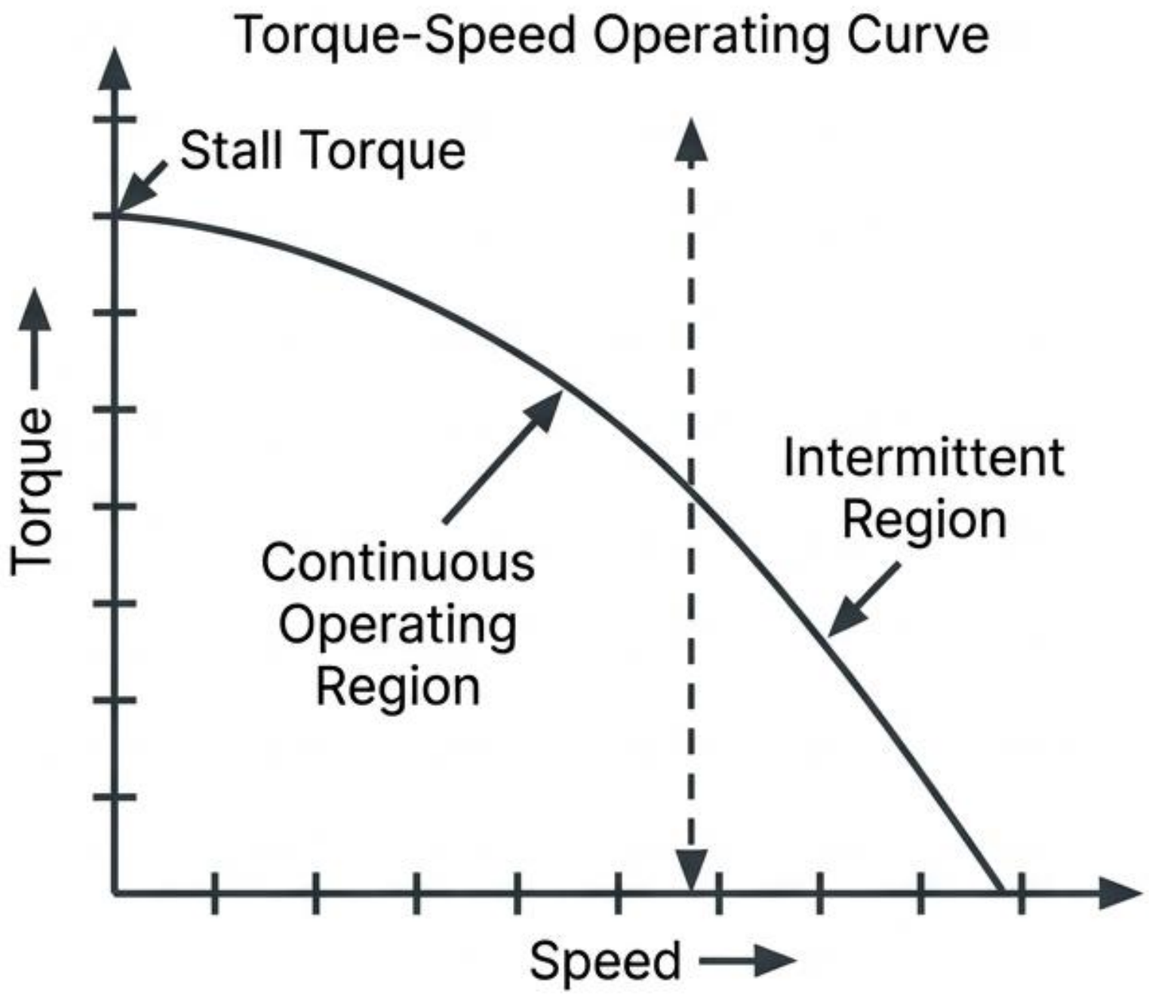

Stall Torque: The absolute maximum torque before the motor stops turning. Exceeding this continuously will overheat and destroy the windings (e.g., Portescap 08G61 limits).

Calculating Dynamic Load: The required torque is never just the weight of the load. It is the sum of the steady-state friction PLUS the accelerating torque ($I \times \alpha$).

Power Limits: The motor's power rating ($P = T \times \omega$) must cover both friction losses and active acceleration without breaching thermal limits.

Master Synthesis: Actuator Selection Guide

Engineering Requirement	Optimal Actuator
High torque, low speed, heavy dynamic loads?	Brushed DC Series Motor
Constant speed under wildly varying loads?	Brushed DC Shunt Motor
High speed, low noise, virtually zero maintenance?	Brushless DC (BLDC) Motor
Cheap, constant torque, continuous running?	AC Induction Motor
Precise digital angular positioning without sensors?	Hybrid Stepper Motor
Simple ON/OFF high-power electrical isolation?	Mechanical Relay / Contactor