CHAPTER 8: MECHANICAL ACTUATION SYSTEMS

The Mechanical Toolkit

Principles of Actuation, Kinematics, and Motion Transformation

The Muscle and Bone of Mechatronics

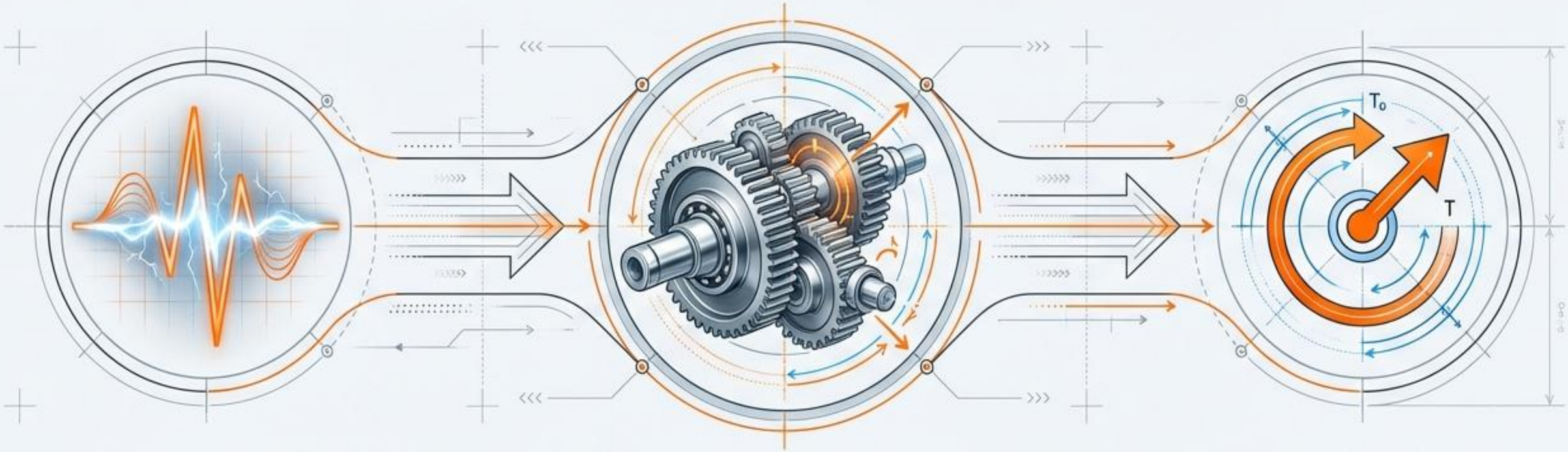

INPUT: Signal & Energy → **PROCESS:** Mechanism → **OUTPUT:** Force & Motion

- Motion Transformation: Linear ↔ Rotary
- Force Amplification: Mechanical Advantage
- Speed Regulation: Gearing Ratios

Kinematics: The Physics of Motion

The study of motion without regard to forces.

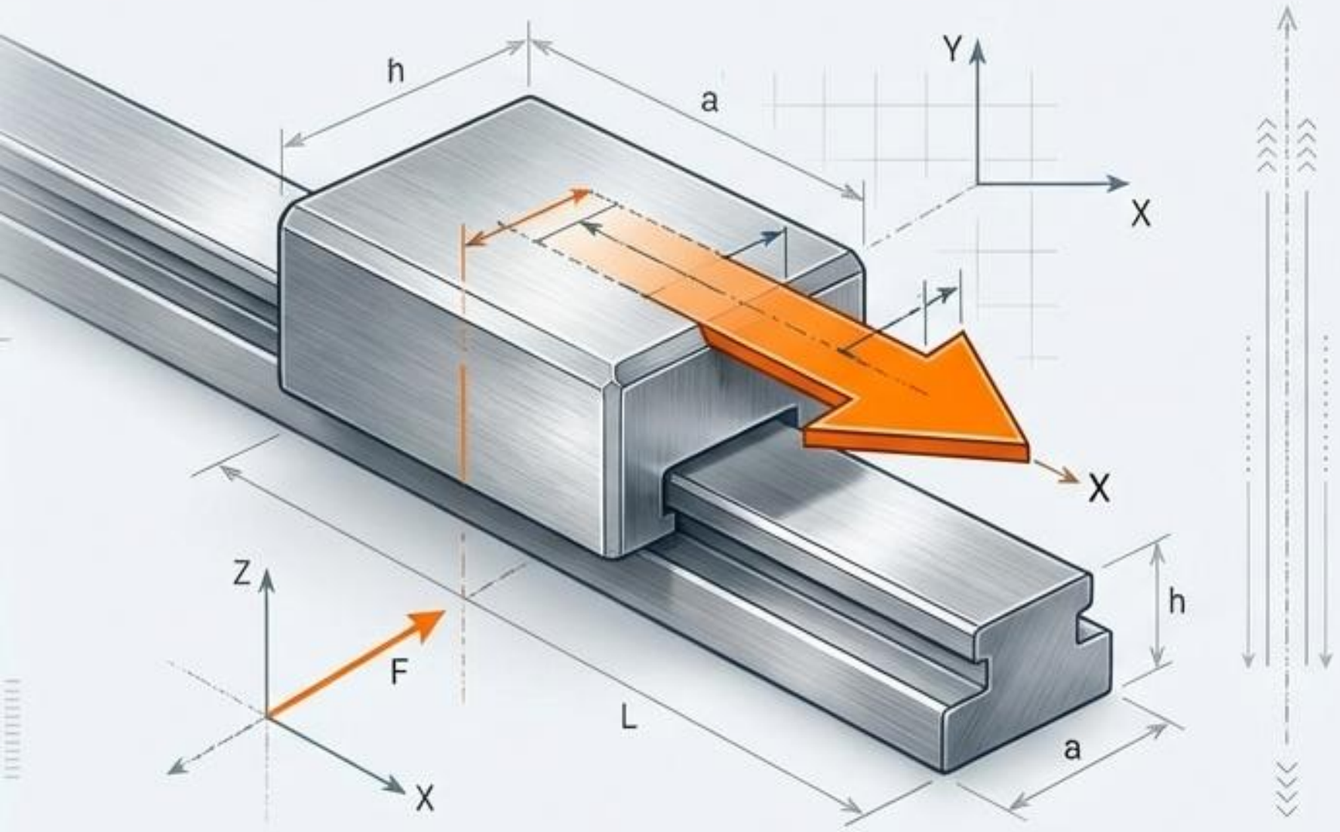

TRANSLATION (Linear)

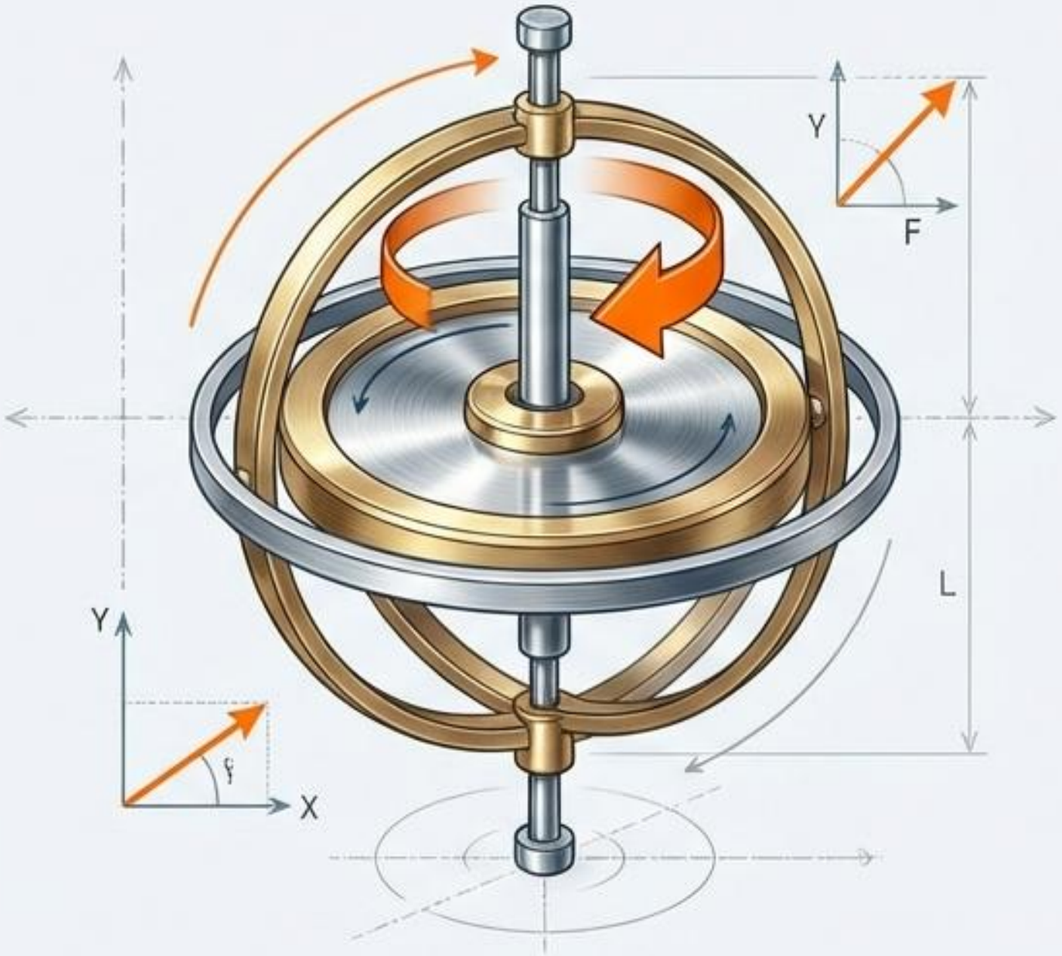

ROTATION (Angular)

Freedom and Constraints

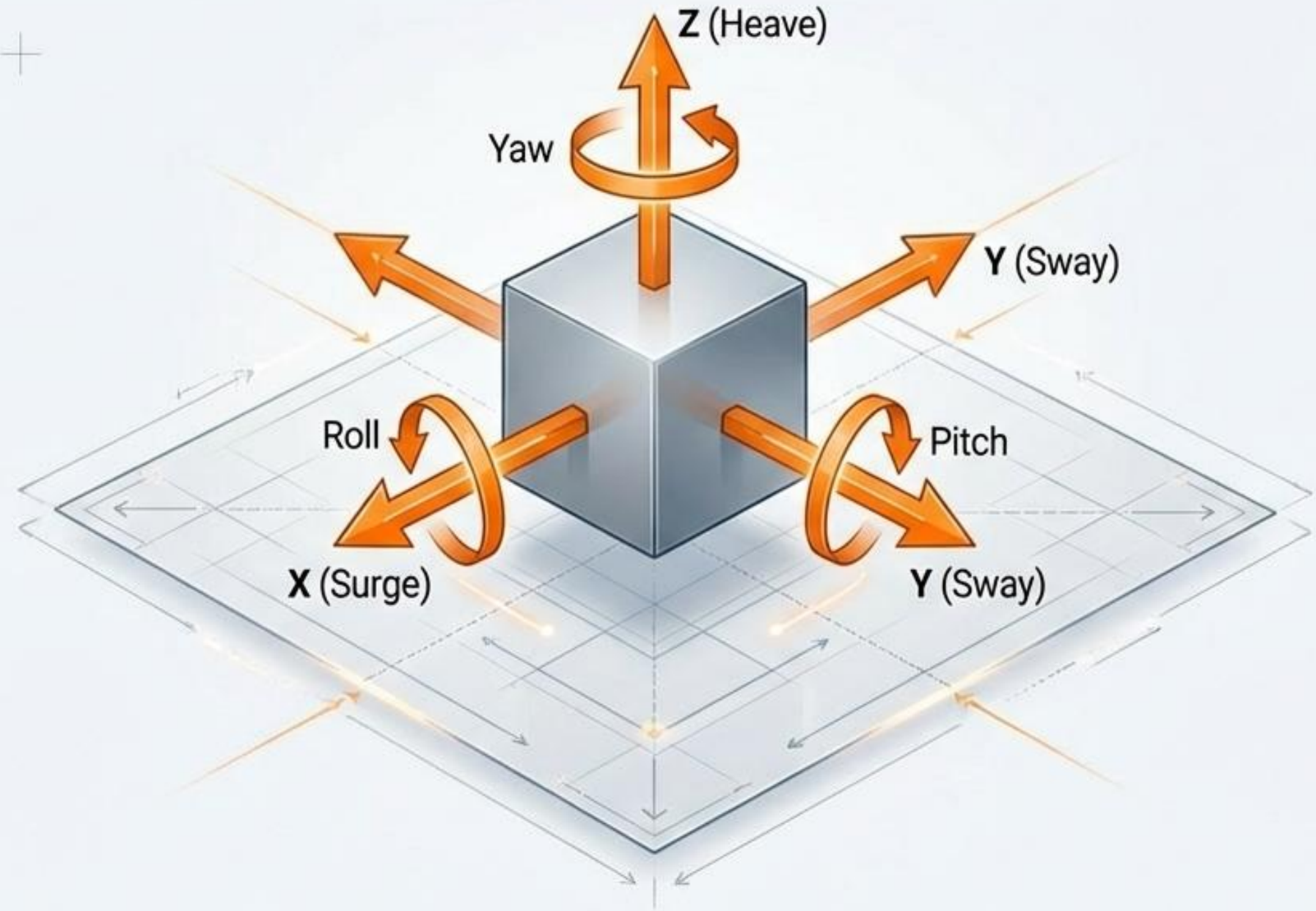

The 6 Degrees of Freedom (DOF)

Engineering is the act of removing DOFs.

- **Hinge Joint:** Removes 5 DOFs (Leaves 1 Rotation)
- **Slider:** Removes 5 DOFs (Leaves 1 Translation)

The Skeleton: Links and Nodes

Parts Catalog

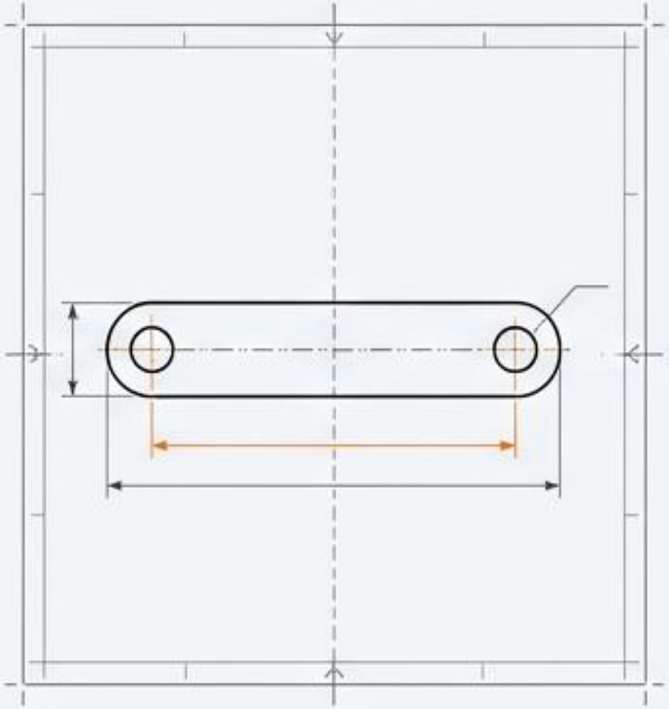

2-Node Link

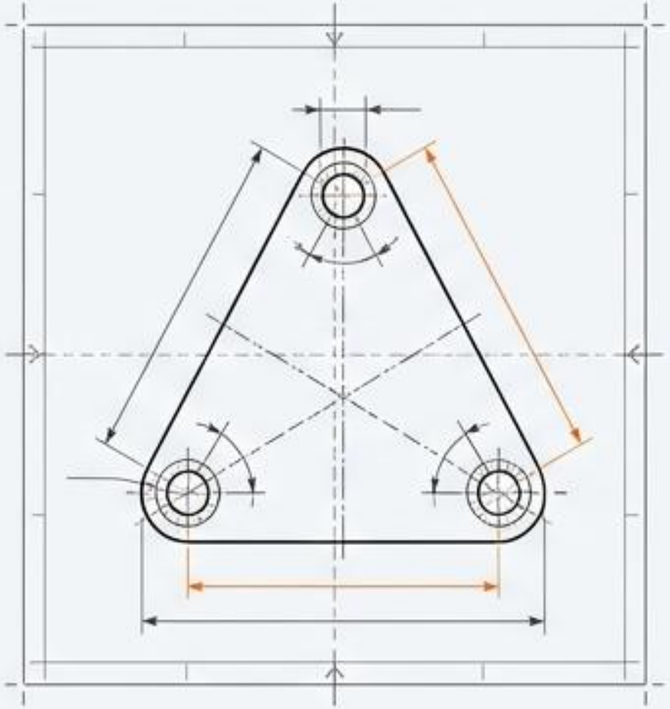

3-Node Link

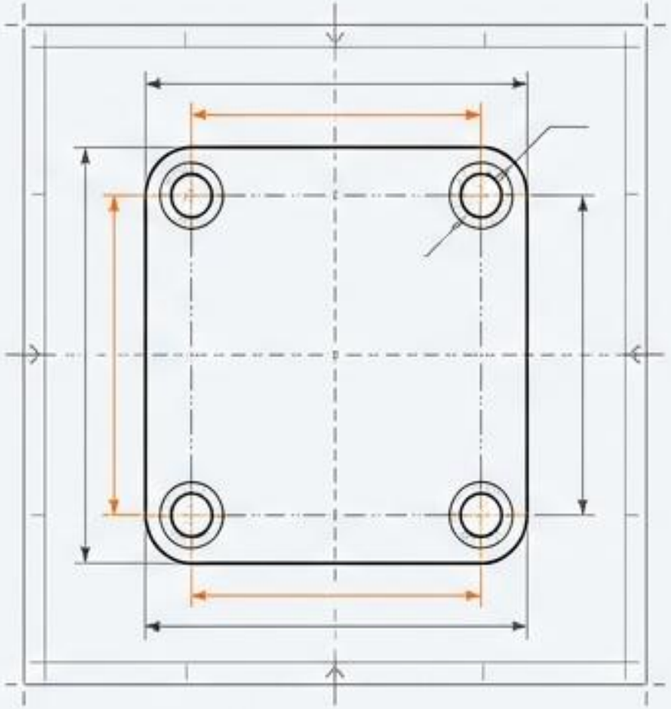

4-Node Link

LINK:
A rigid body capable of transmitting force.

NODE:
Attachment point.

JOINT:
Connection allowing relative motion.

The Four-Bar Chain & Grashof's Condition

$$S + L \leq P + Q$$

(Where S=Shortest, L=Longest, P,Q=Others) in Helvetica Now Display.

Double-Lever

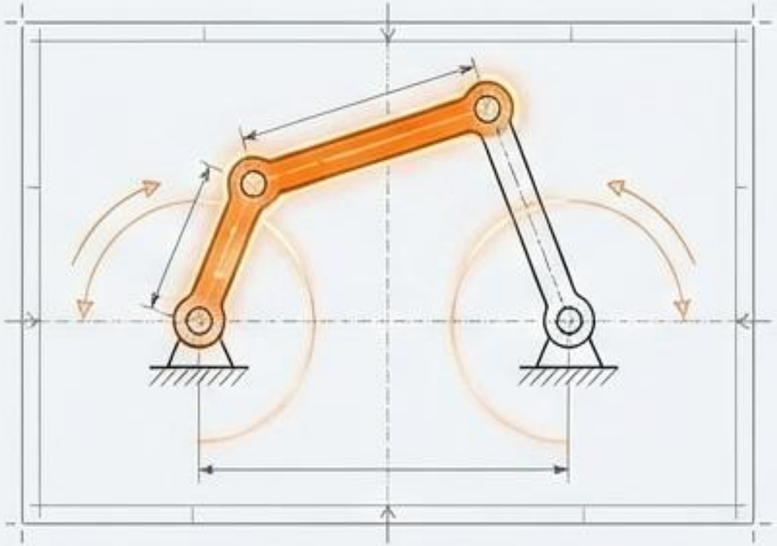

Lever-Crank

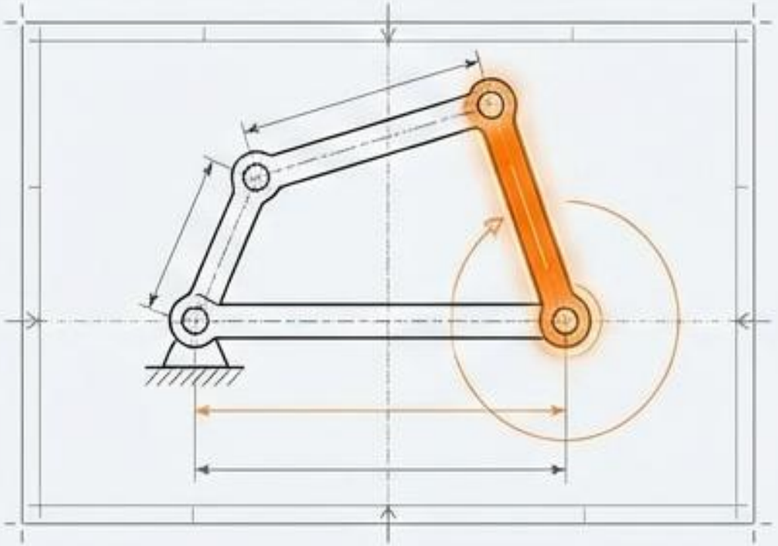

Double-Crank

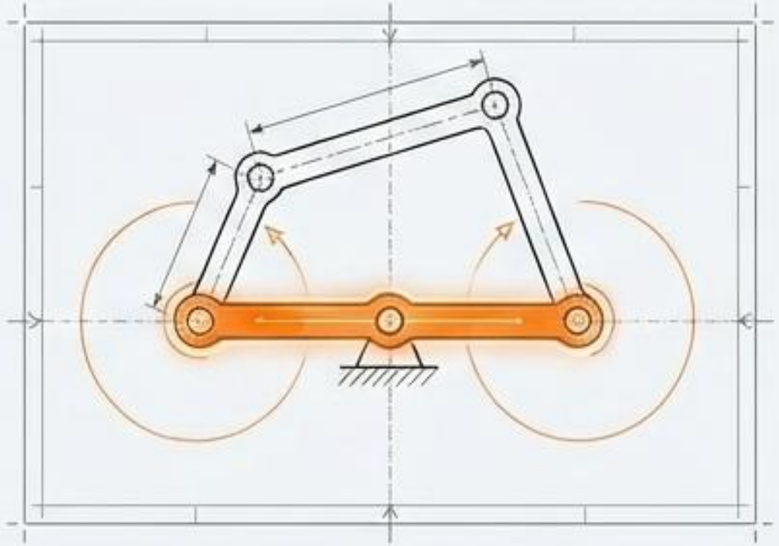

Converting Rotation to Reciprocation

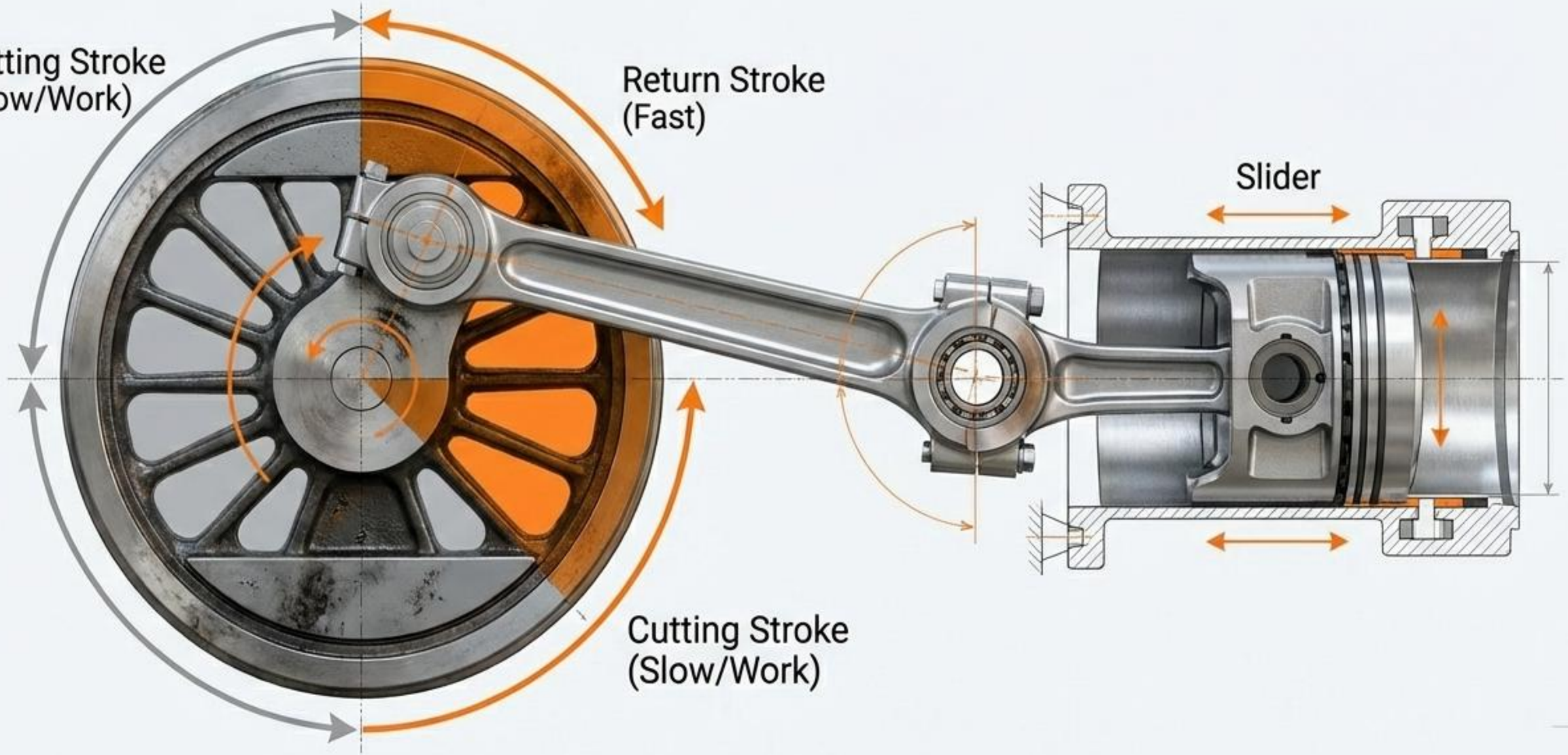

Cams: Programming Displacement

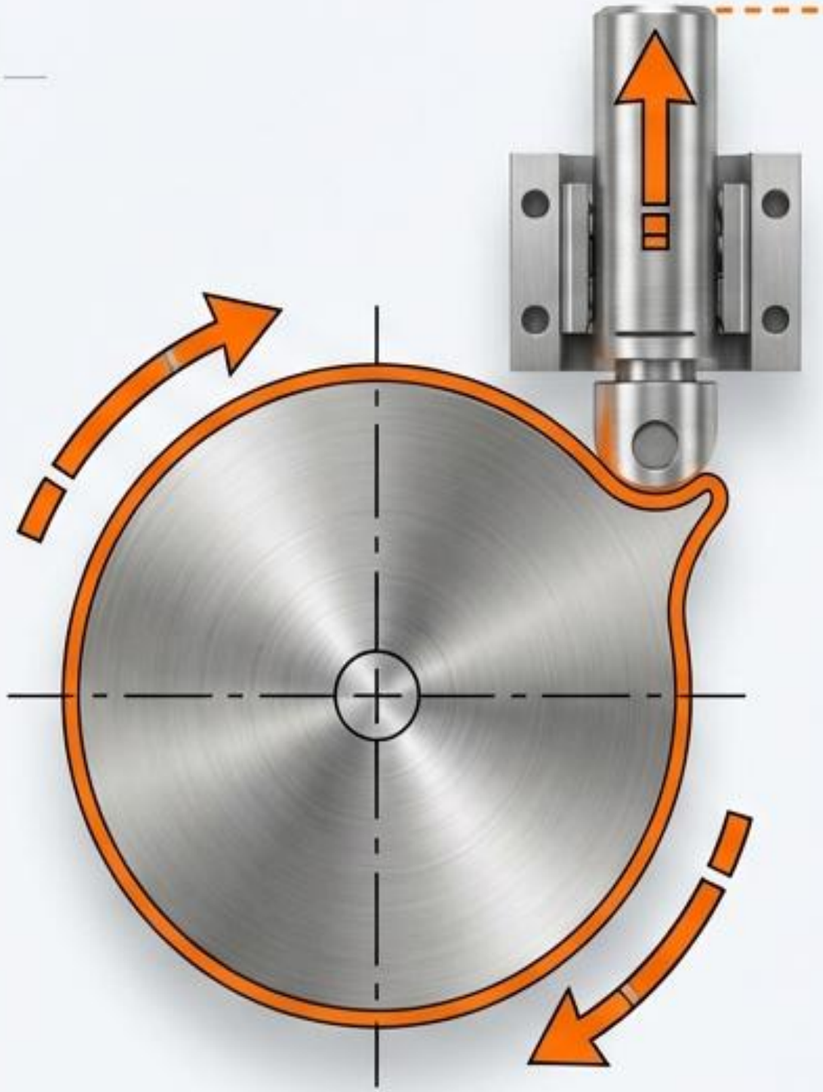

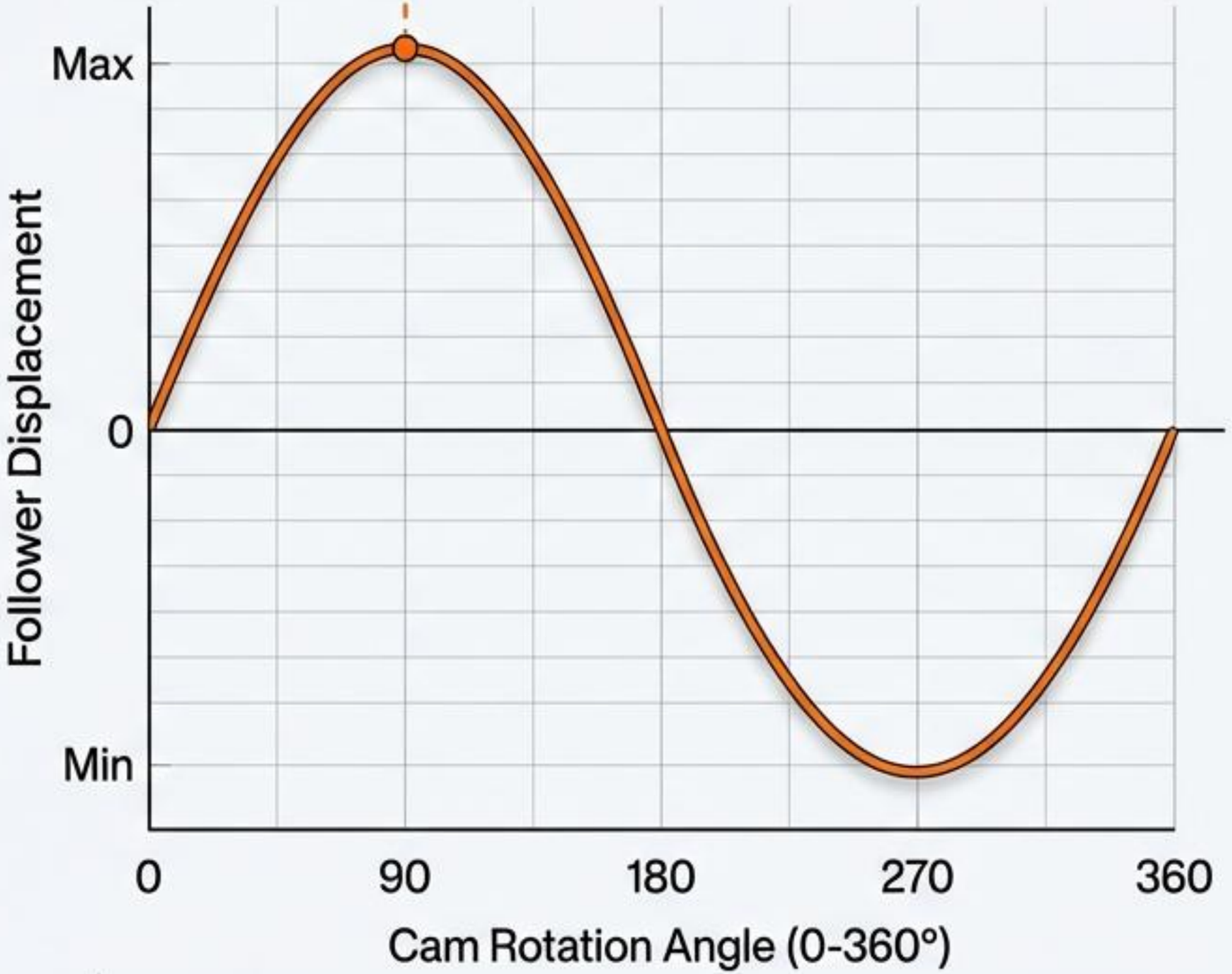

Gears: The Speed/Torque Trade-off

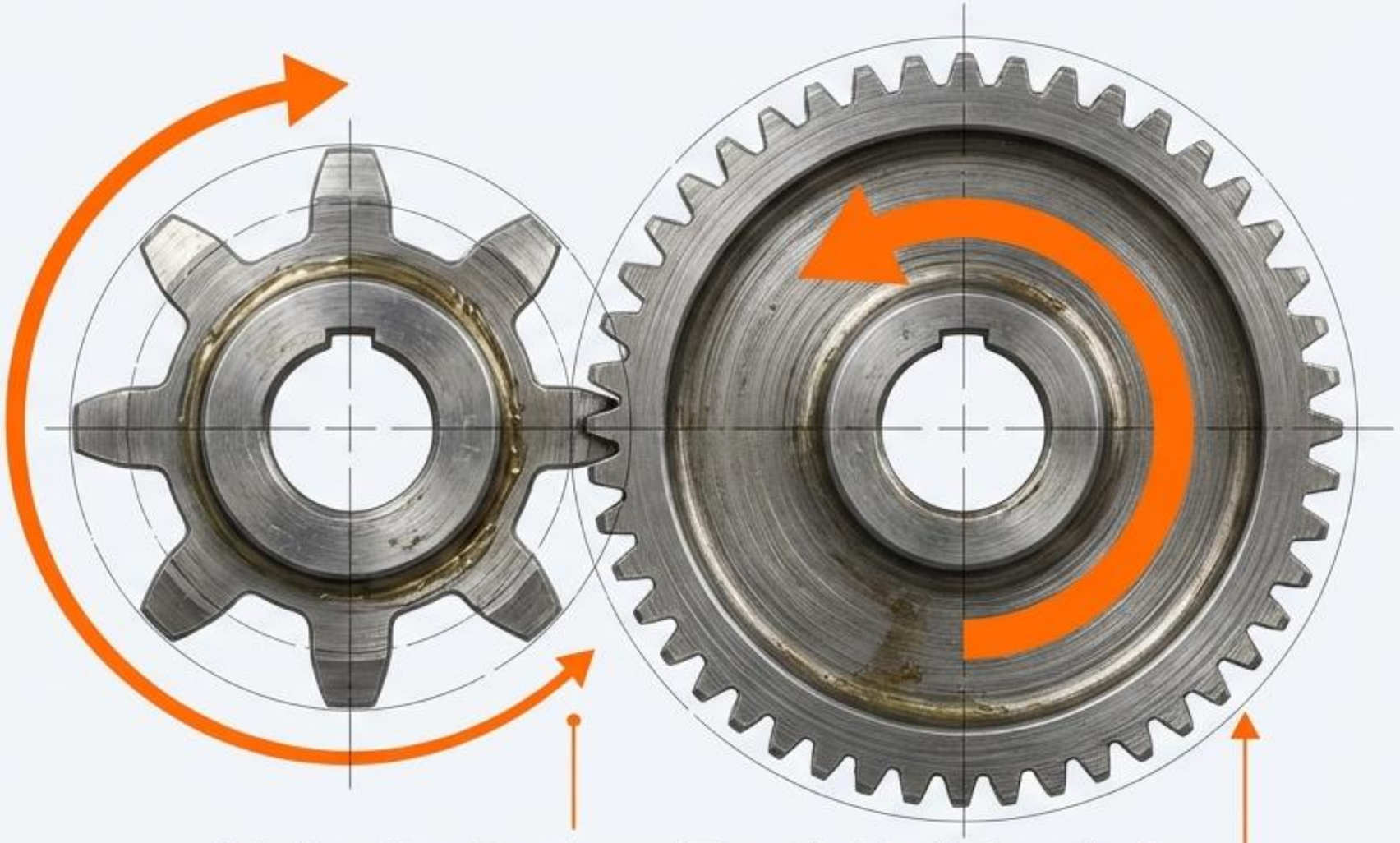

DRIVER
(Input)

DRIVEN
(Output)

Velocity Ratio = Teeth B / Teeth A

Small driving Big = Speed Decrease / Torque Increase

Compound Gear Trains

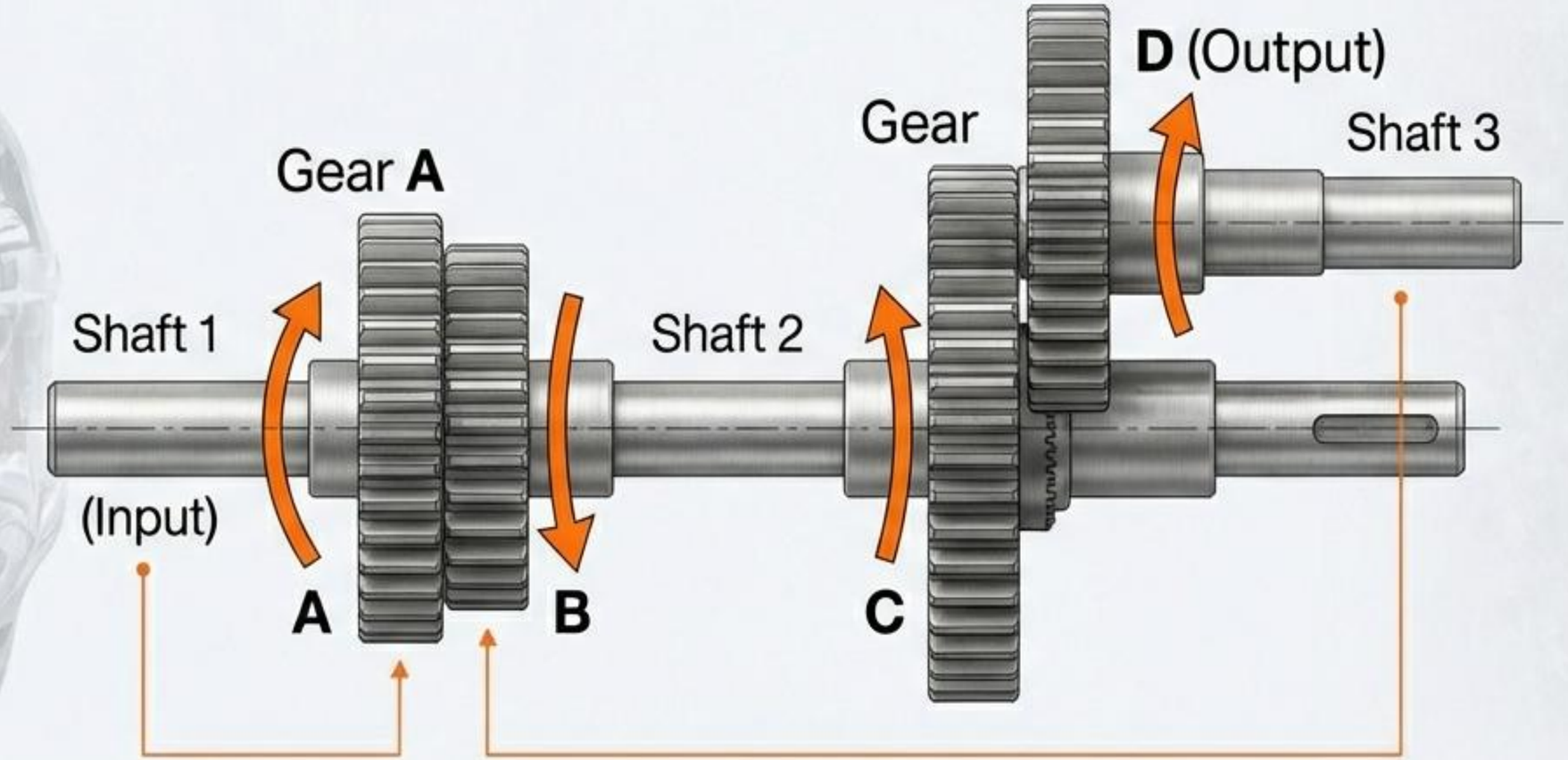

Compound Rule: Gears on the same shaft share the same Angular Velocity.

Total Ratio = Product of Driven / Product of Driving

Distance Transmission: Belts vs. Chains

Distance Transmission

BELT DRIVE

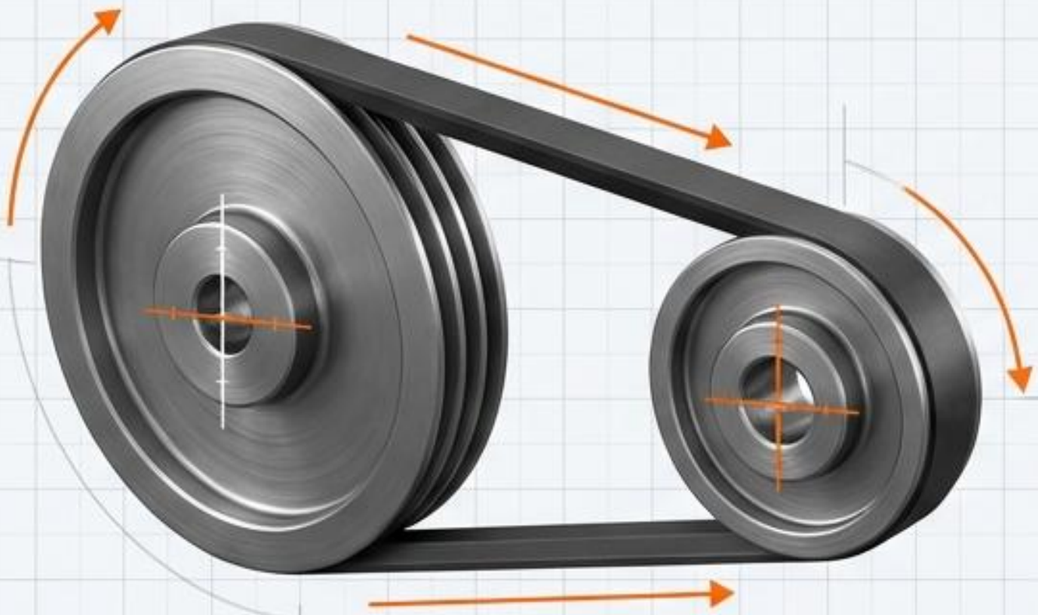

- Quiet operation
- Absorbs shock
- Subject to slip

CHAIN DRIVE

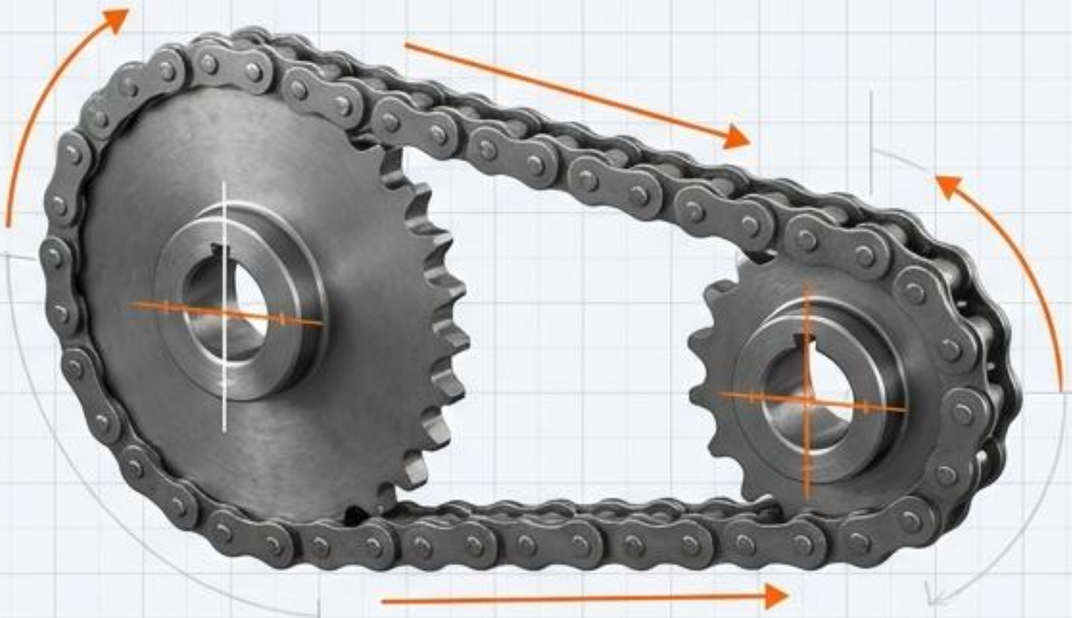

- No slip (Positive Drive)
- Fixed phase relationship
- Noisier

Bearings: Reducing Friction

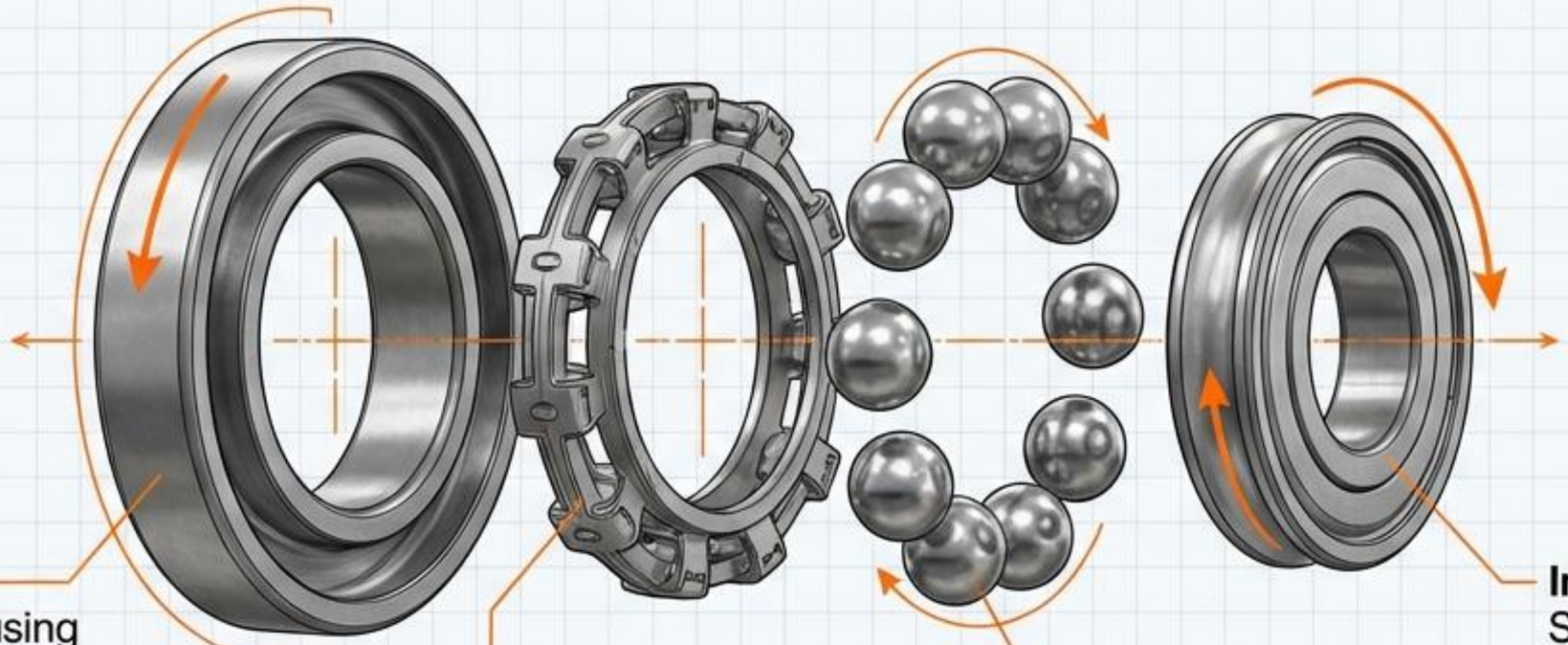

Function: To guide motion with minimum friction and constrain specific Degrees of Freedom.

Bearing Types: Point vs. Line Contact

Ball Bearing

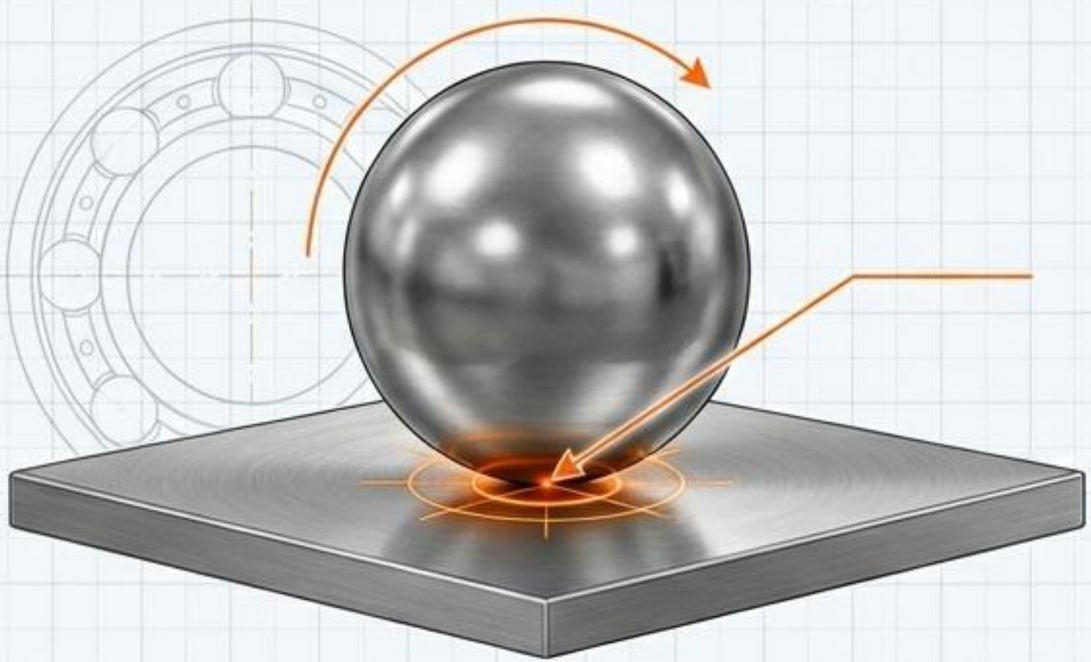

Point Contact.
High Speed.
Moderate Load.

Roller Bearing

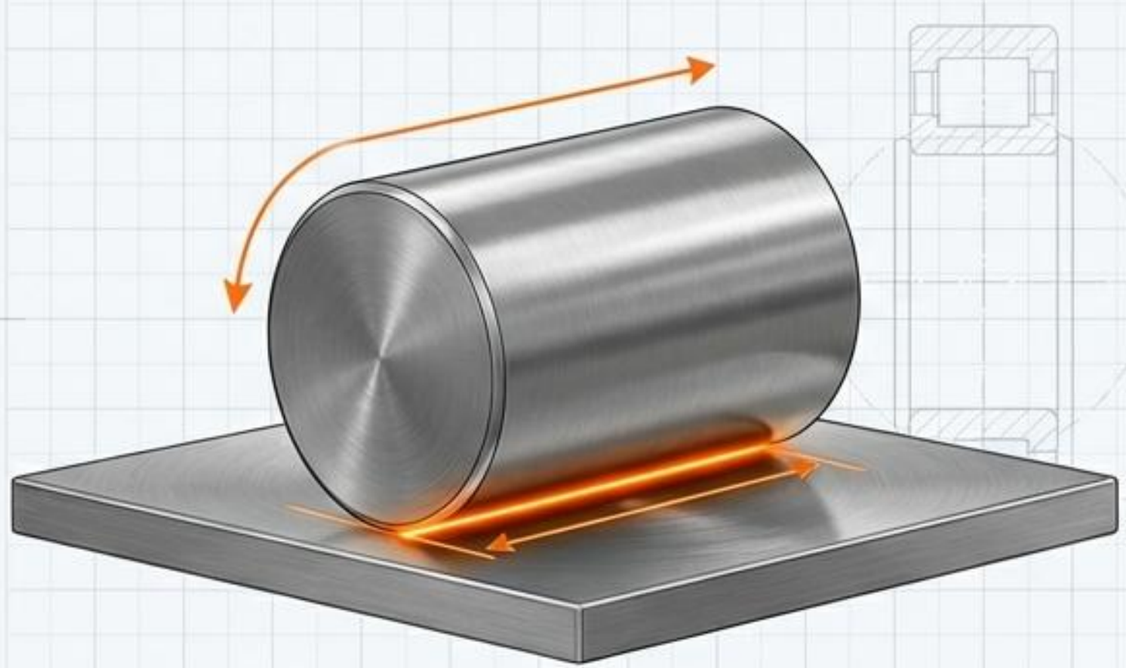

Line Contact.
Lower Speed.
High Radial Load.

The Danger of Redundancy

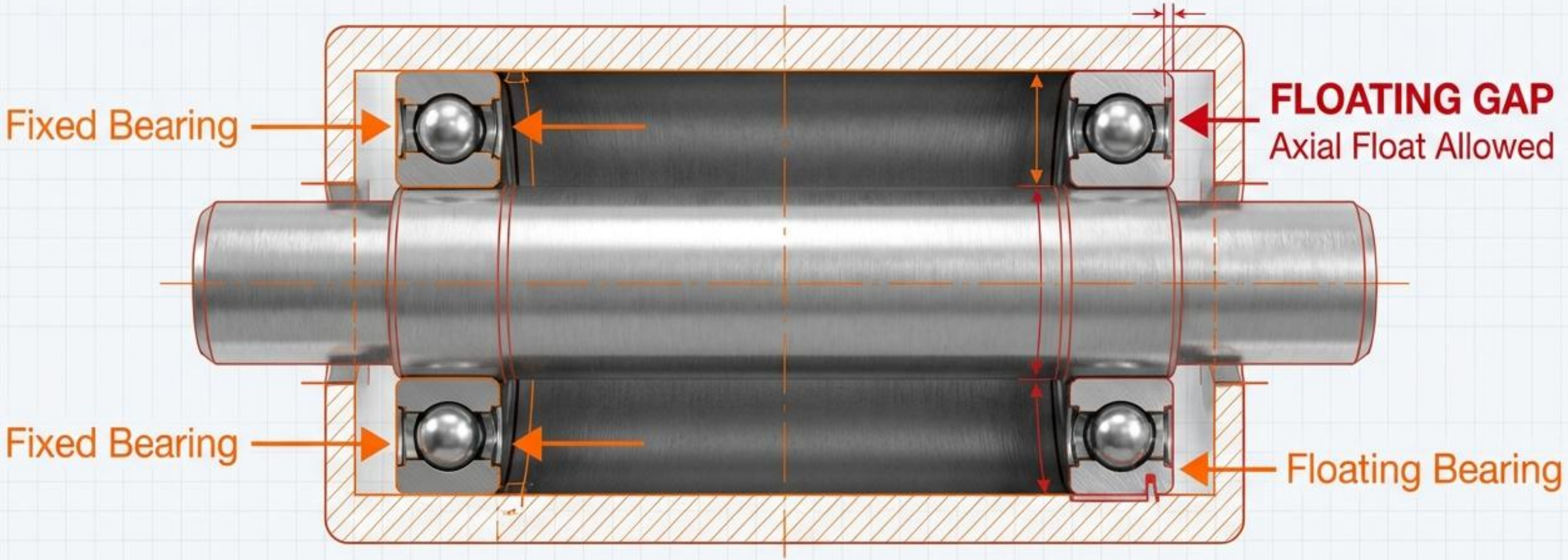

Over-constraint leads to failure. If both bearings are rigidly fixed, thermal expansion of the shaft will destroy the mechanism. One support must allow axial float.

The Designer's Toolkit Summary

Kinematics	Structure	Transformation	Transmission	Support
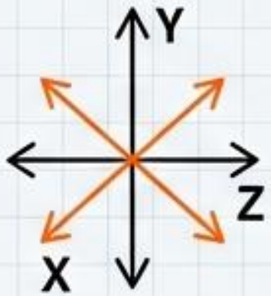	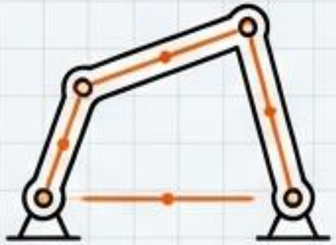	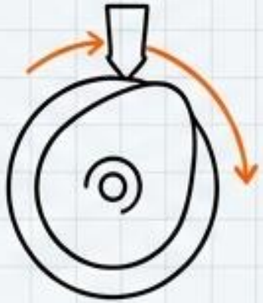	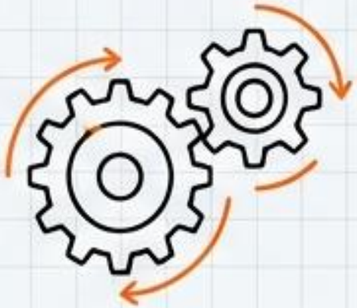	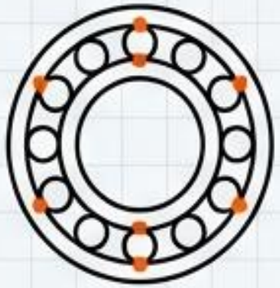
Translation/Rotation, DOF.	Links, Nodes, Chains.	Slider-Crank, Programming Motion.	Speed/Torque, Belts/Chains.	Friction reduction, Constraint.

"Mechanical design is the strategic management of freedom and constraint."