DATA PRESENTATION SYSTEMS

Chapter 6: Bridging the Digital Brain and the Physical World

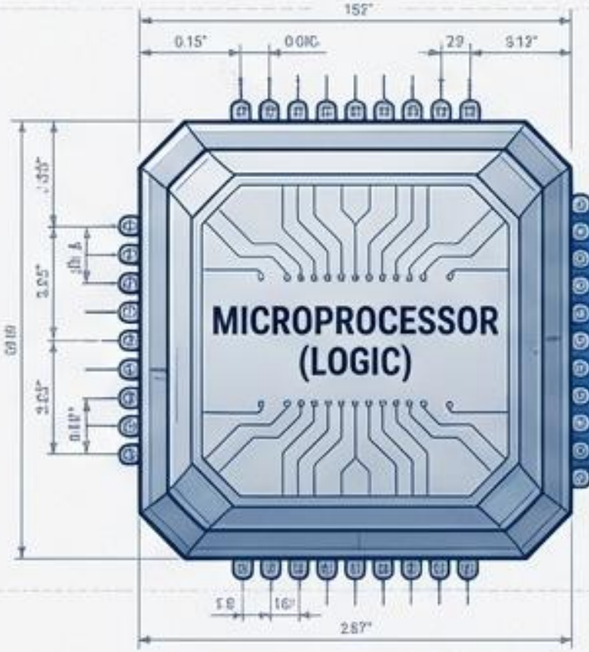

DATA BUS WIDTH: 256-BIT
CONTROL SIGNAL: ENABLE HIGH

CONTROL SIGNAL: ENABLE HIGH
POWER SUPPLY: +5V DC

MICROPROCESSOR (LOGIC)

CLOCK SPEED: 4.0 GHz, CORES: 8,
ARCHITECTURE: 64-BIT RISC

ACTIVE
WRITING

MAGNETIC RECORDING (STORAGE)

CAPACITY: 10 TB, INTERFACE: SATA III, RPM: 7200

ACTIVE
DISPLAY

LIQUID CRYSTAL DISPLAY (VISUALIZATION)

RESOLUTION: 4K UHD, REFRESH RATE: 144 Hz, TECHNOLOGY: IPS LCD

ENGINEERING SCHEMATIC - REV A.01
PROJECT: DIGITAL INTERFACE
DATE: OCT 26, 2024 | DRAWN BY: SYSTEM ARCHITECT

THE PHYSICS OF MEMORY

Writing Data via Magnetic Flux

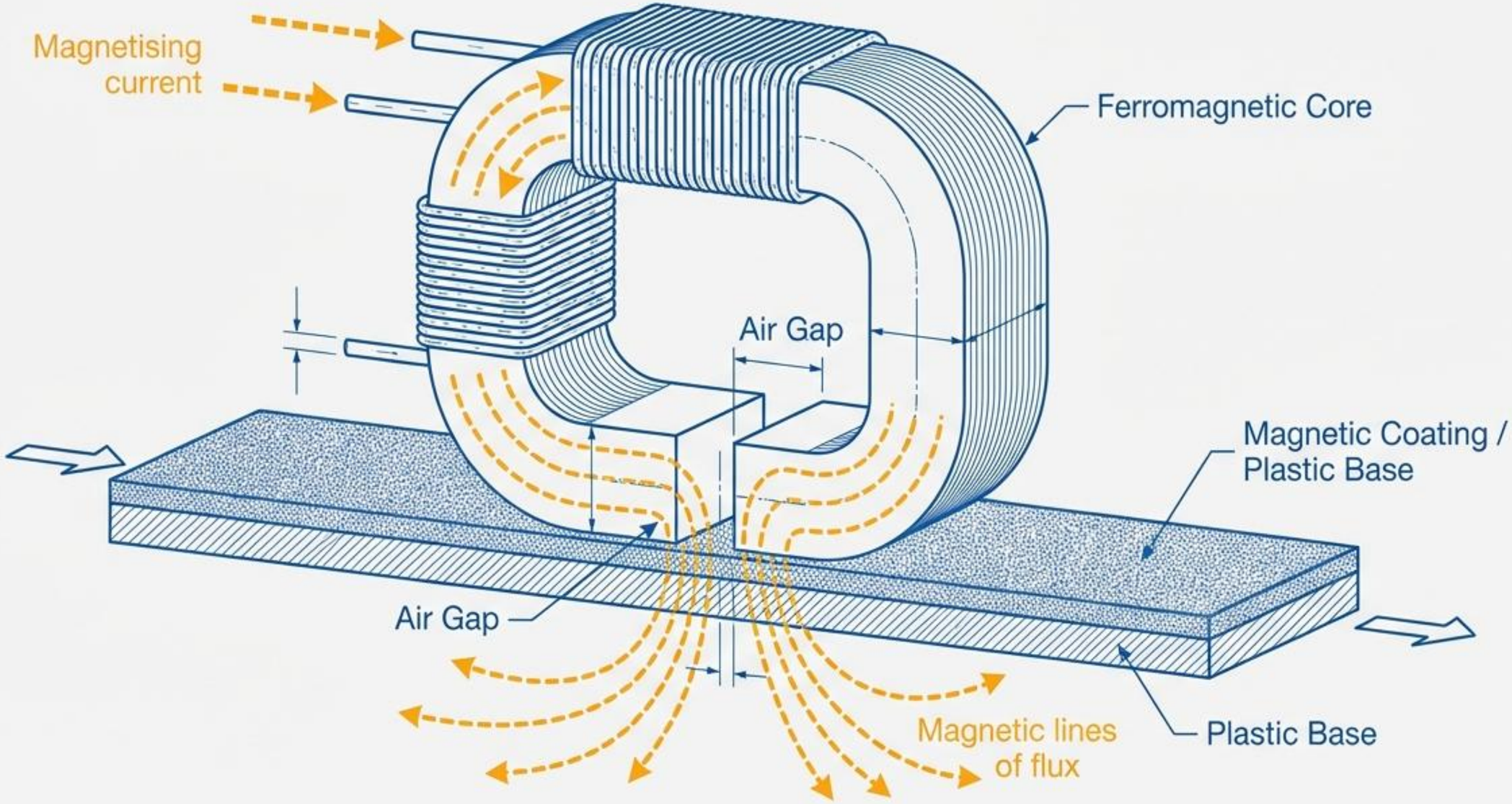

RETRIEVING THE SIGNAL

The Read Head Mechanism

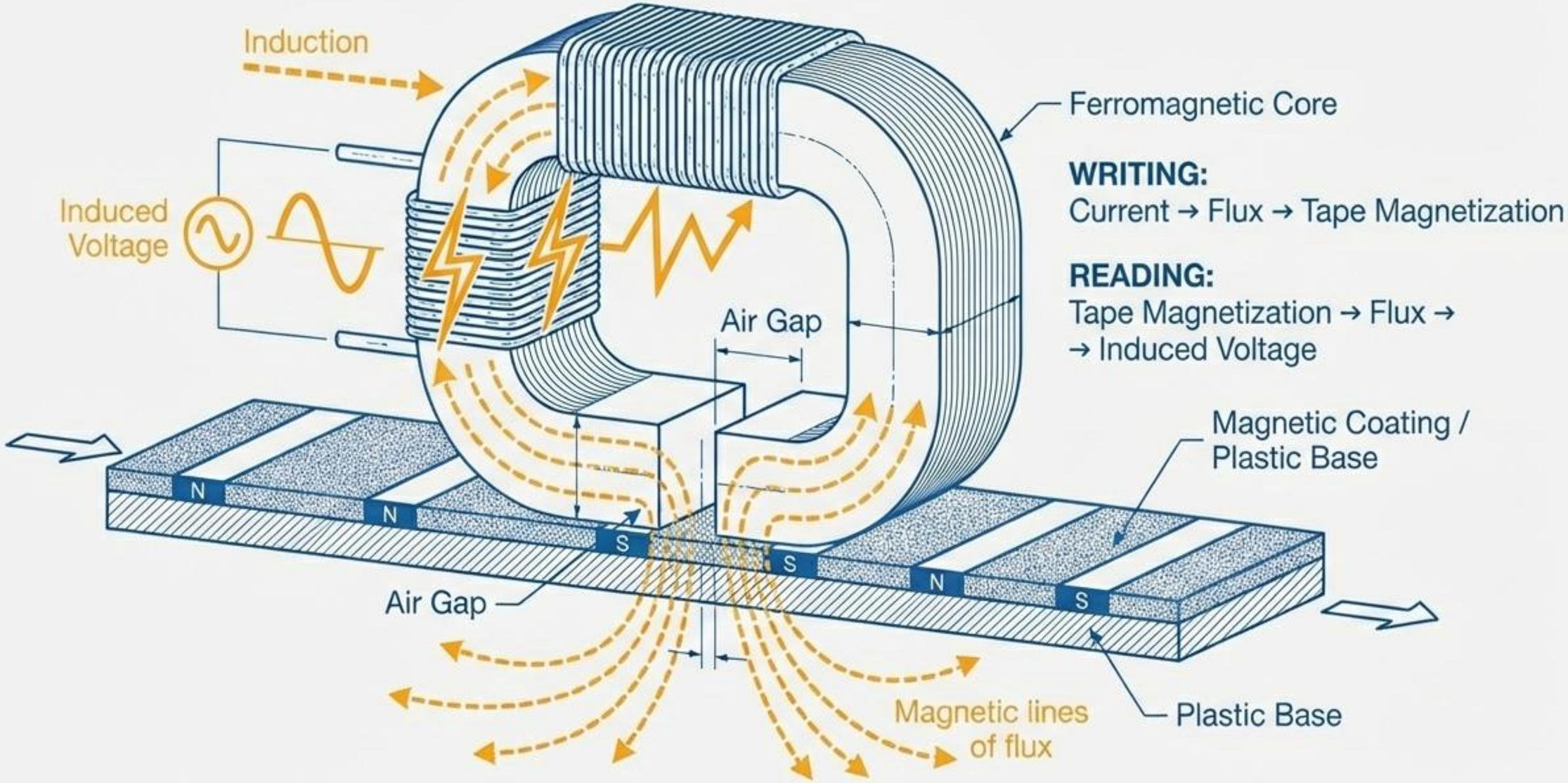

WRITING:
Current → Flux → Tape Magnetization

READING:
Tape Magnetization → Flux →
→ Induced Voltage

THE DIGITAL CHALLENGE

Bit Cells & Timing Encoding

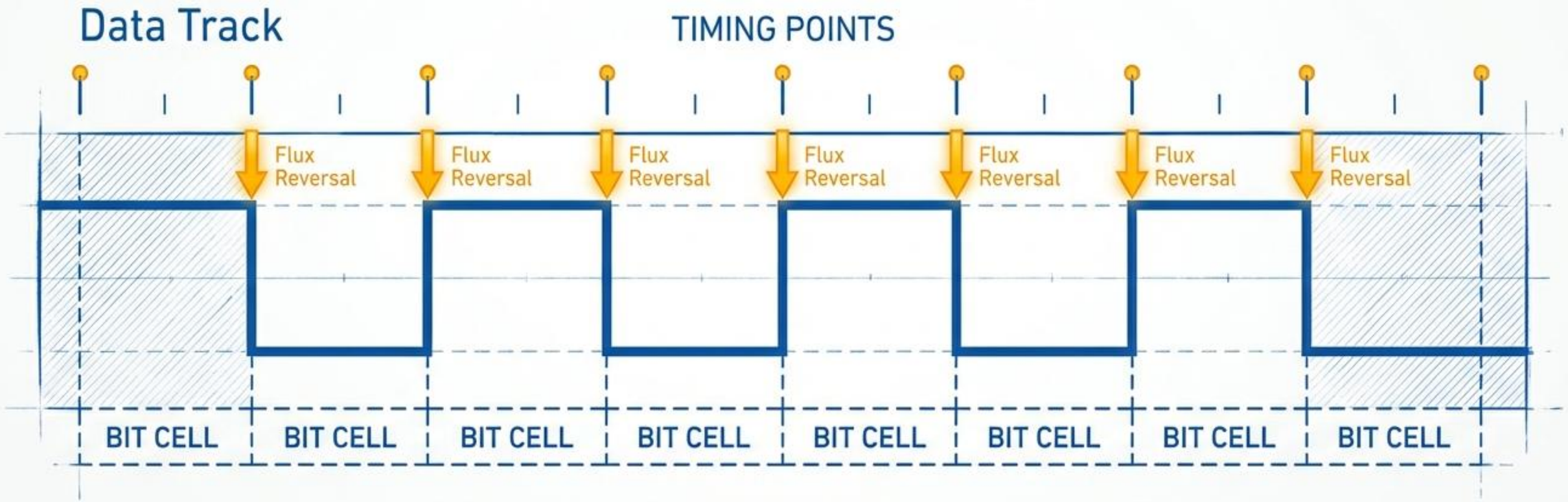

Synchronization Critical: Flux reversals must align with timing points to prevent error.

VISUALIZING DATA: LCDs

Low-Power Interface for Battery Devices

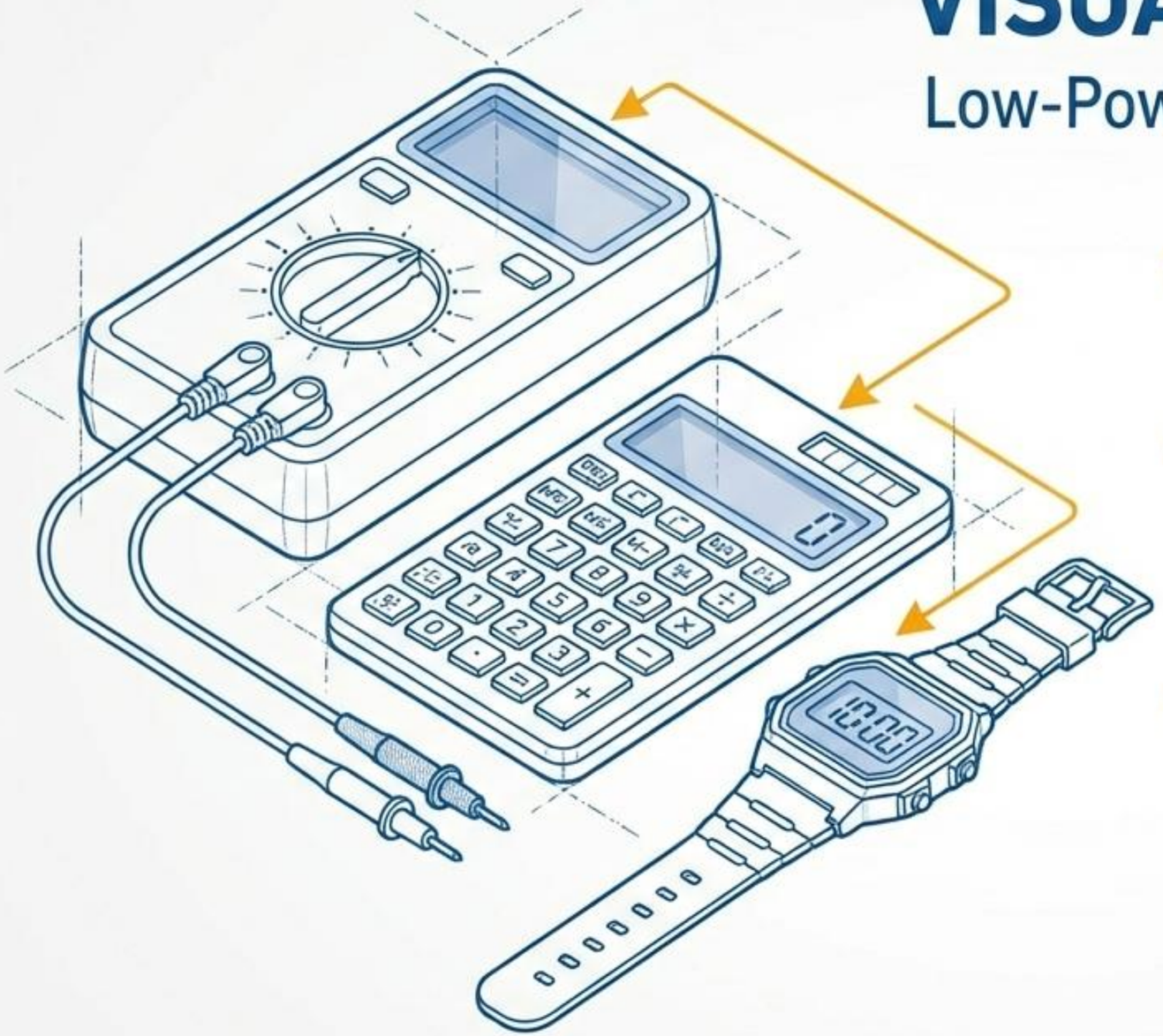

- **Passive Display:** Modifies light rather than generating it.
- **Low Energy:** Ideal for mobile phones, watches, and instrumentation.
- **Interface:** Connects directly to microprocessor output ports.

STATE 1: THE OFF STATE

Light Transmission via Molecular Rotation

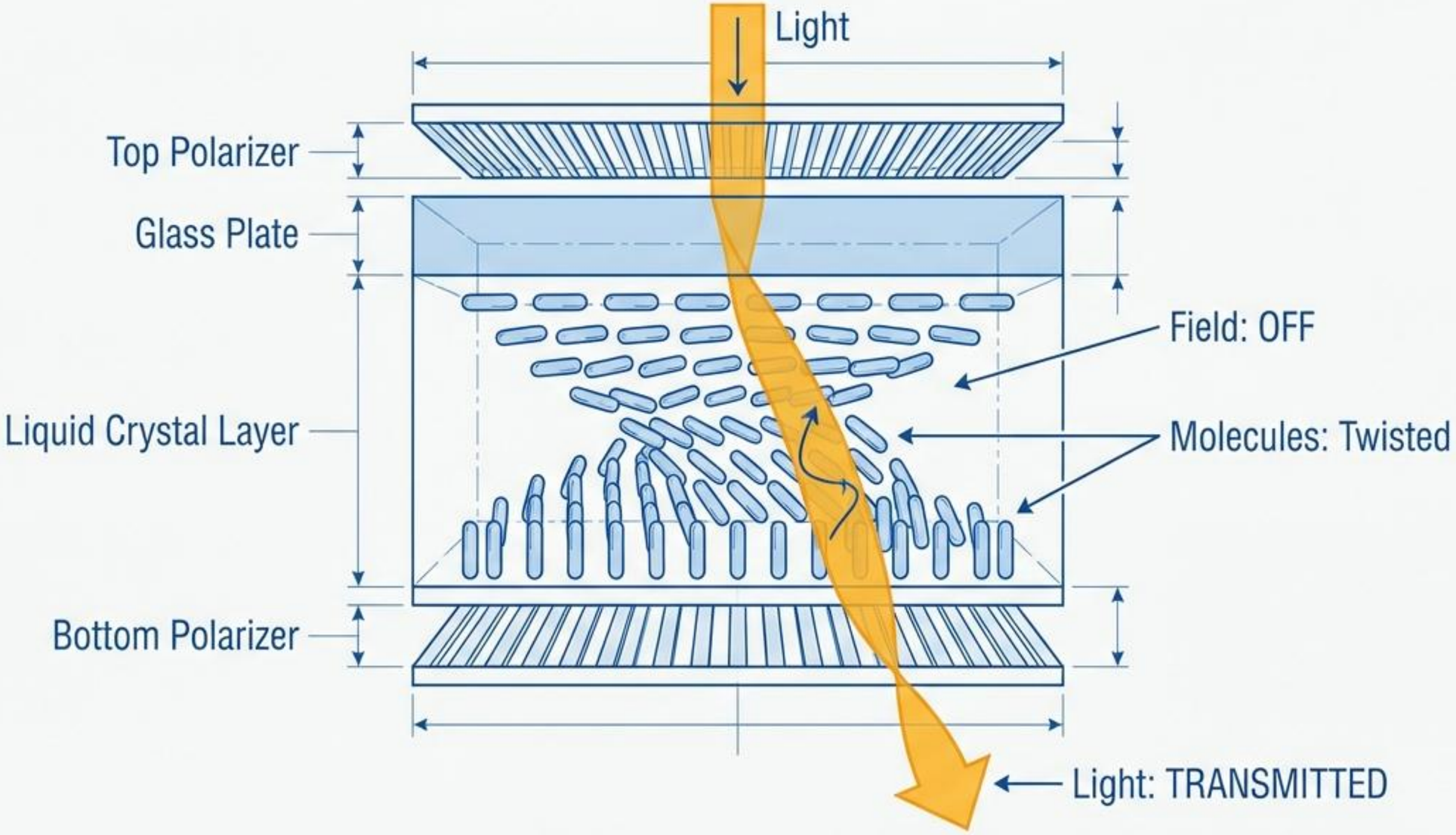

STATE 2: THE ON STATE

Blocking Light to Create Characters

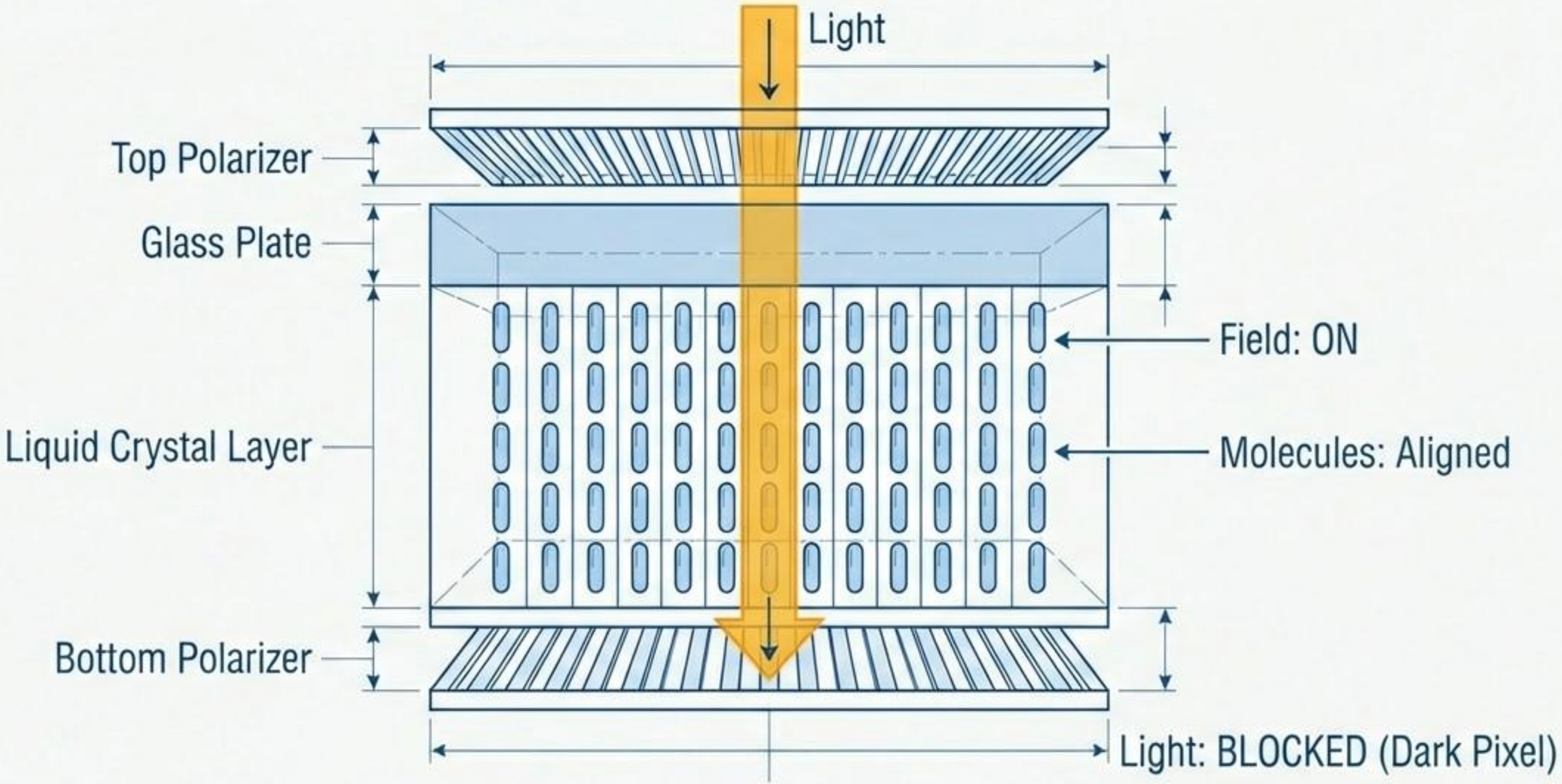

Electric Field + Alignment = Darkness

INTERFACING THE DISPLAY

Character Generation via Dot Matrix

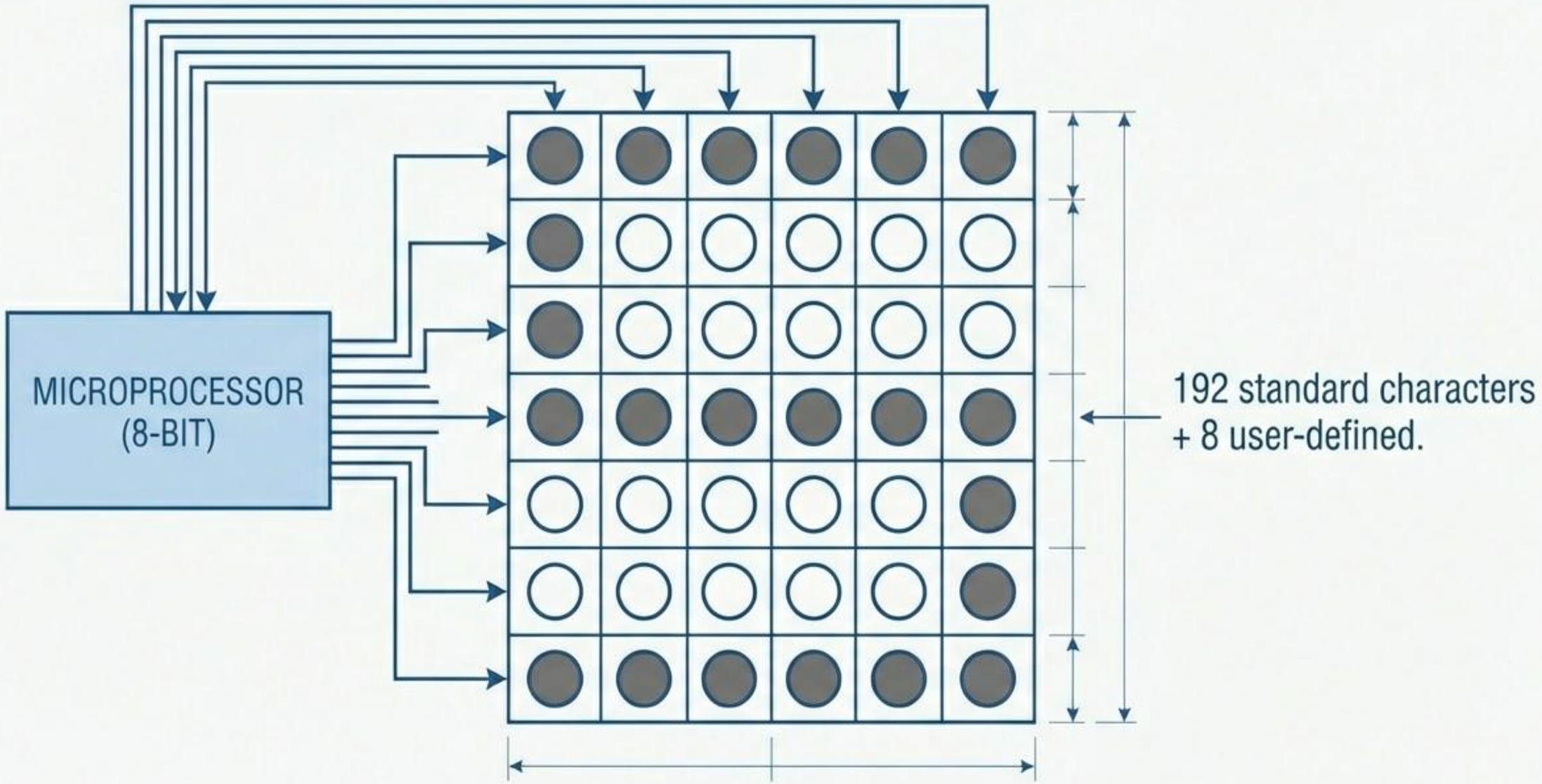

MAGNETIC RECORDING

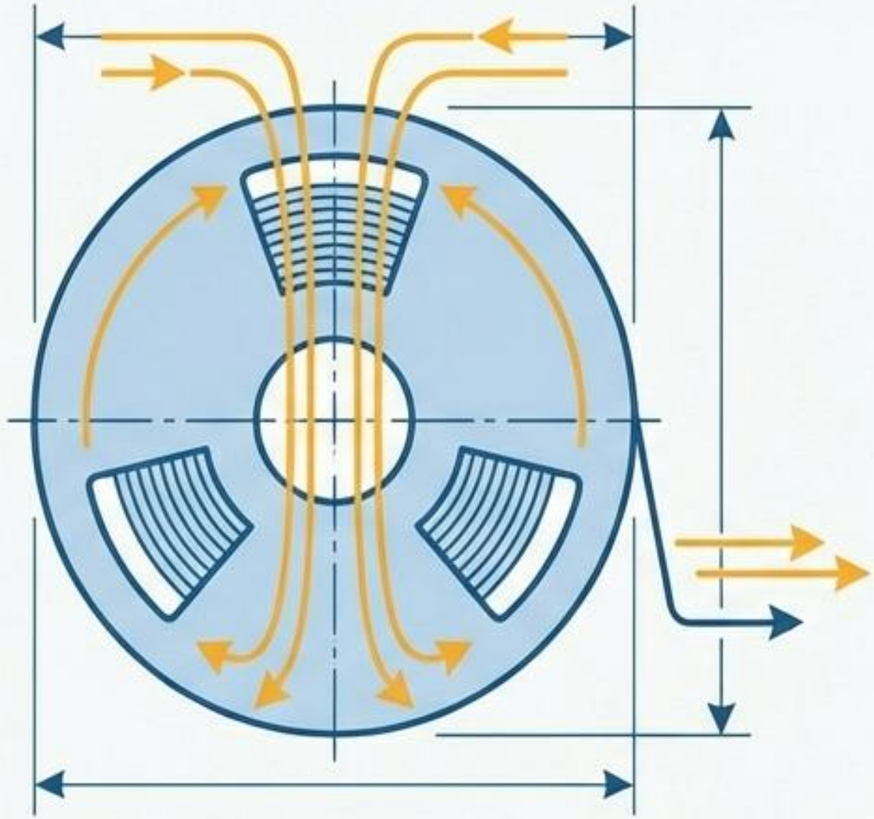

- **Role:** Storage (Memory)
- **Physics:** Induction & Flux
- **Key:** Retention of magnetic state.

LIQUID CRYSTAL DISPLAY

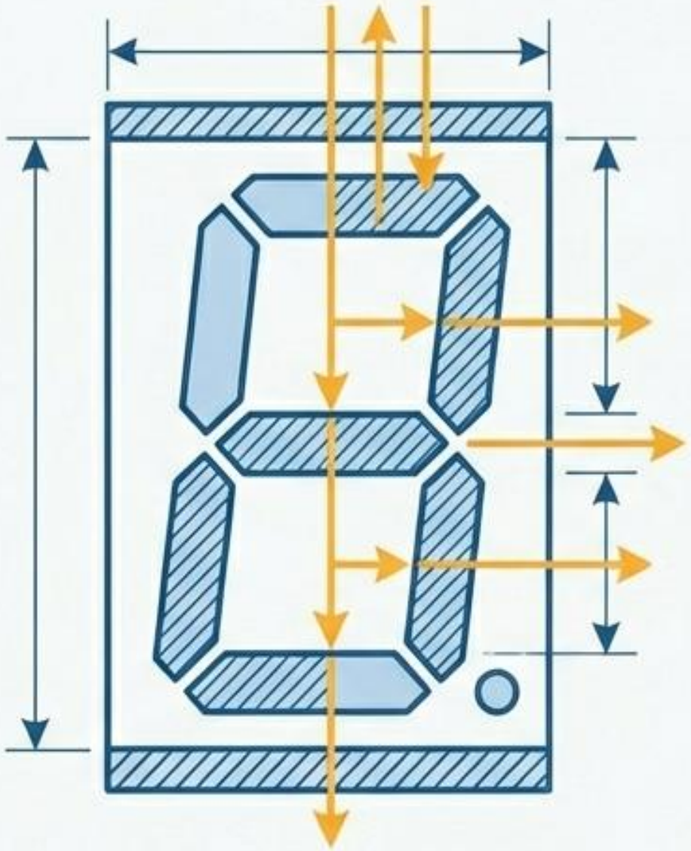

- **Role:** Presentation (Visual)
- **Physics:** Polarization & Optics
- **Key:** Manipulation of light paths.

SUMMARY: Mechatronic design relies on the reliable conversion of digital logic into physical phenomena.