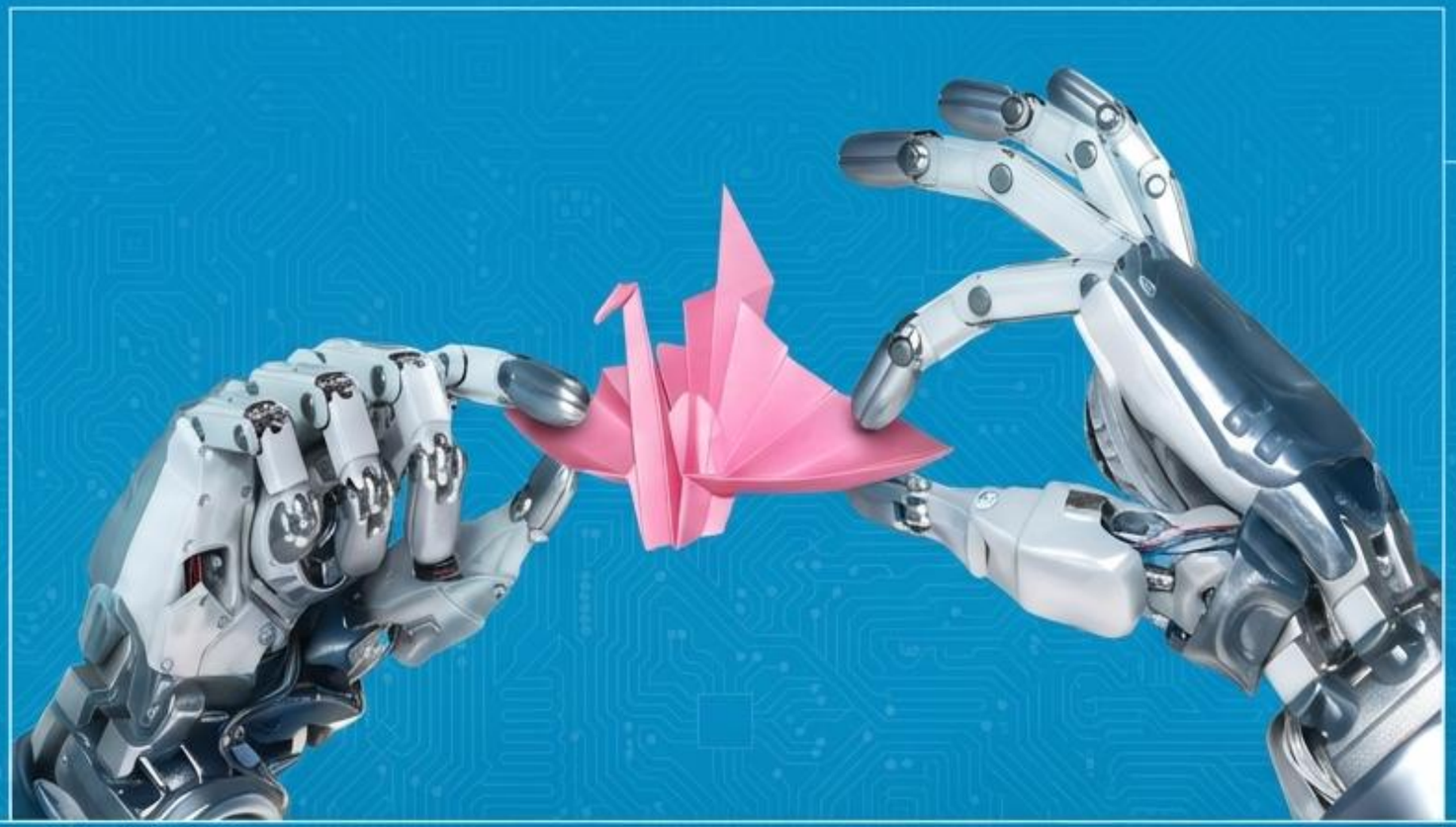

The Nervous System of Mechatronics

Chapter 5: Digital Logic

Mechatronics lies at the heart of the innumerable gadgets and processes of modern life. Digital logic is the framework that allows these mechanical systems to exercise control, make decisions, and execute specific sequences.

THE BINARY DECISION

The machine treats the world as a series of binary choices.
In mechatronics, these represent physical states.

0

0V / False / Open Circuit

- System Idle
- Valve Closed
- Circuit Open

1

5V / True / Closed Circuit

- Solenoid Active
- Motor Running
- Switch Closed

THE AND GATE: THE STRICT GUARDIAN

Output Q is true if and only if Input A AND Input B are both true.

THE MECHANICAL ANALOGY

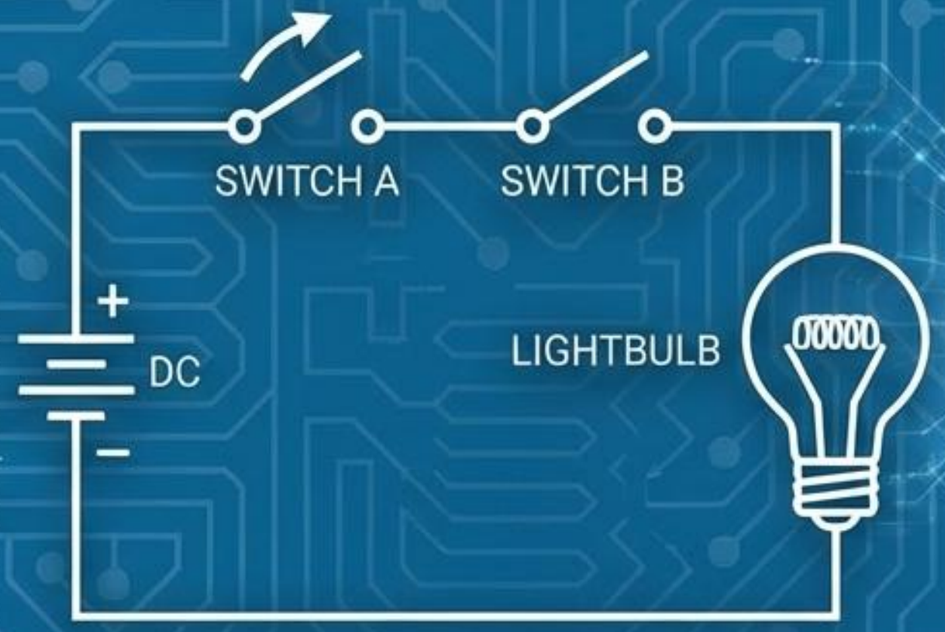

Both switches must be closed for current to flow.

THE SYMBOLS

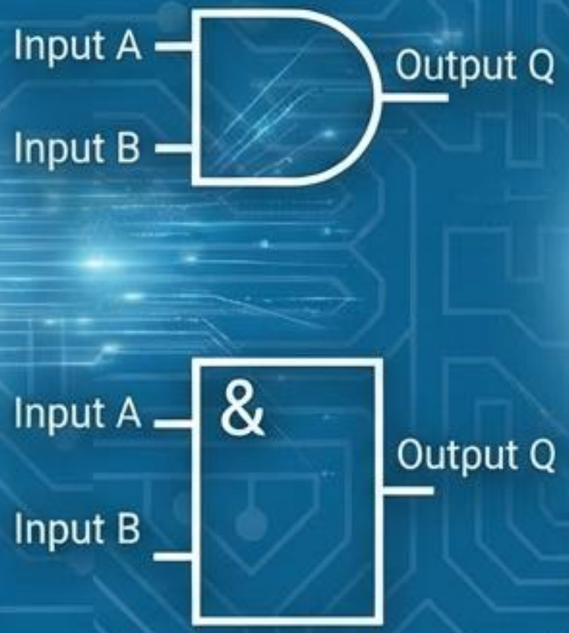

THE TRUTH TABLE

Input A	Input B	Output Q
0	0	0
0	1	0
1	0	0
1	**1**	**1**

THE OR GATE: THE FLEXIBLE OPTION

The OR function is true if the number of inputs that are true is greater than or equal to 1.
Boolean Equation: A + B = Q

THE MECHANICAL ANALOGY

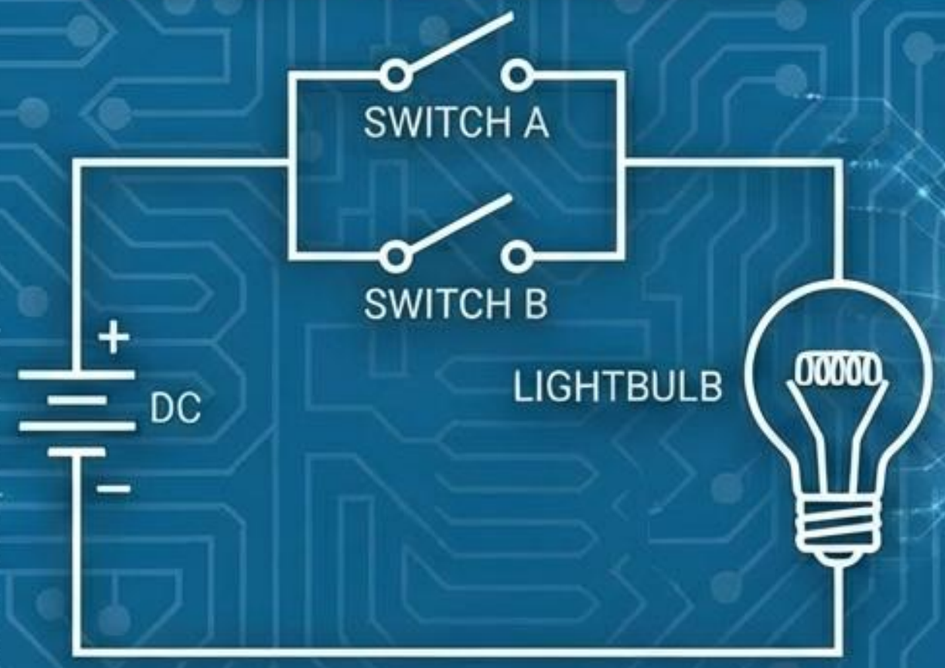

Current flows if either switch is closed.

THE SYMBOLS

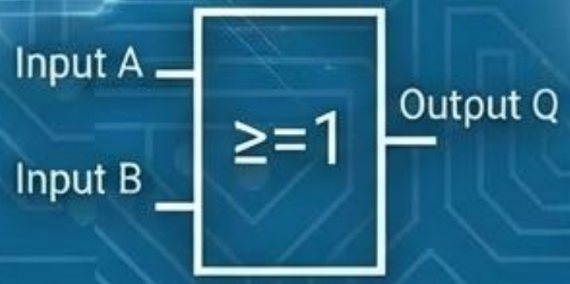

THE TIMING DIAGRAM

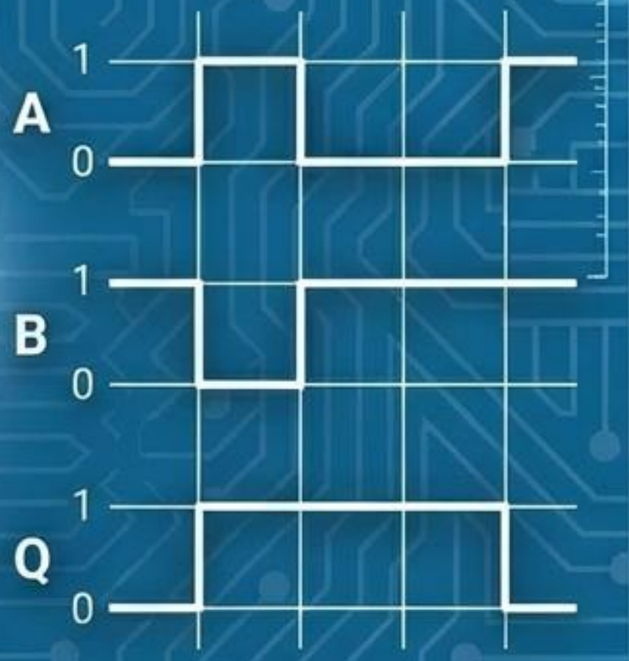

AND LOGIC (MULTIPLICATION)

$$A \cdot B = Q$$

If any factor is 0, the result is 0.

OR LOGIC (ADDITION)

$$A + B = Q$$

If any term is 1, the result is 1.

Combinational Complexity

Boolean algebra allows engineers to simplify complex logic requirements into the fewest necessary gates.

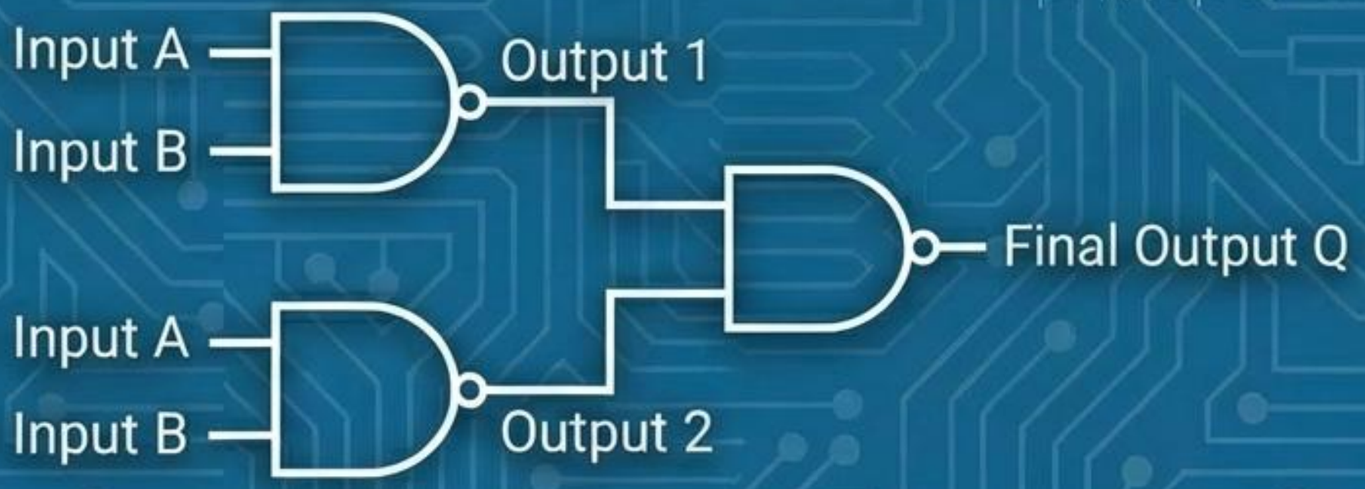

7408 Quad 2-Input AND

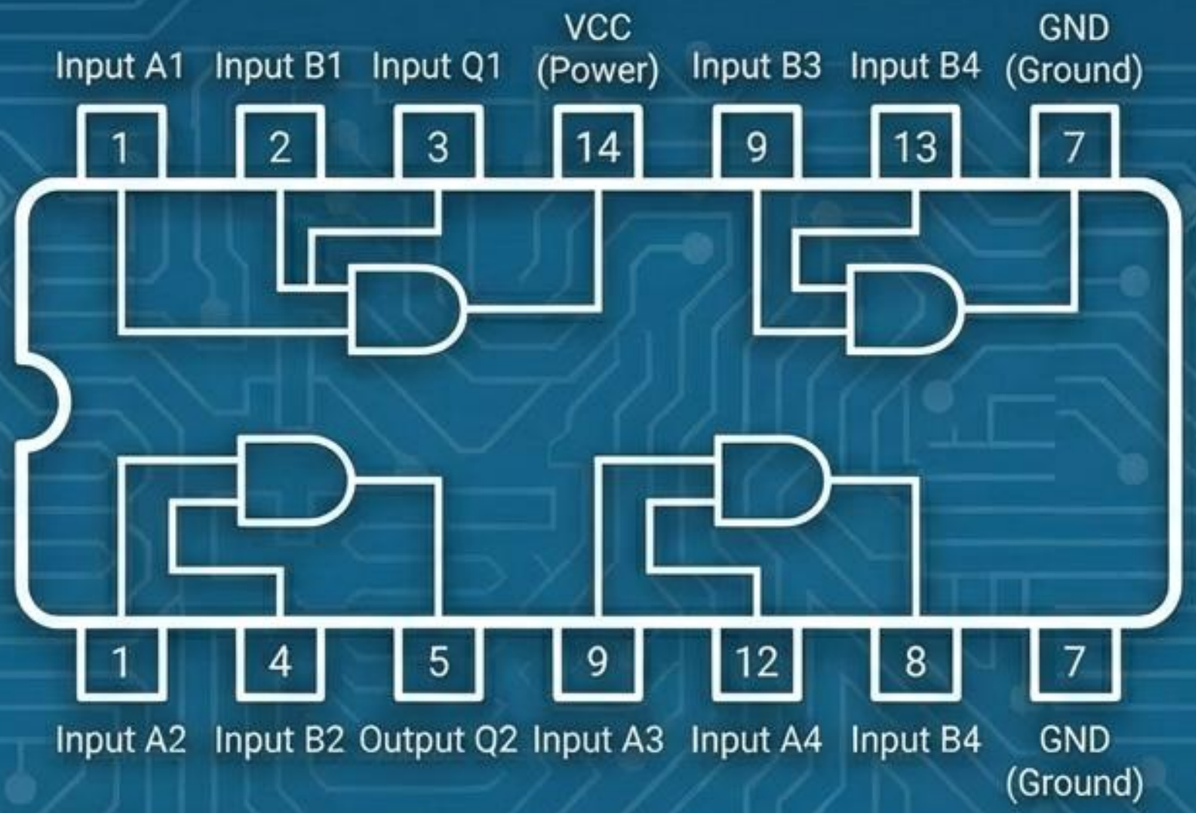

Hardware Reality: Logic Families

- TTL (Transistor-Transistor Logic): The 7400 series.
- CMOS (Complementary Metal Oxide Semiconductor): The 4000 series.
- Integrated Circuits (ICs) house multiple gates in a single block.

THE INTRODUCTION OF TIME: SEQUENTIAL LOGIC

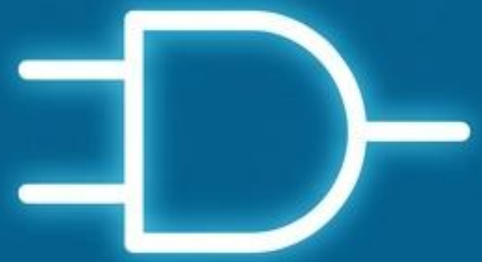

COMBINATIONAL LOGIC

Output depends only on current inputs.
(No Memory)

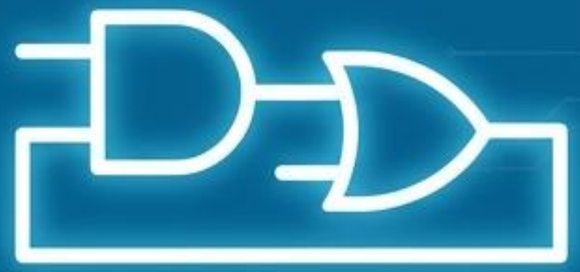

SEQUENTIAL LOGIC

Output depends on history + inputs.
(Has Memory)

The heartbeat of the system. Digital circuitry exercises control in a specific sequence dictated by this signal.

THE CLOCK SIGNAL

MEMORY & FEEDBACK: THE SR FLIP-FLOP

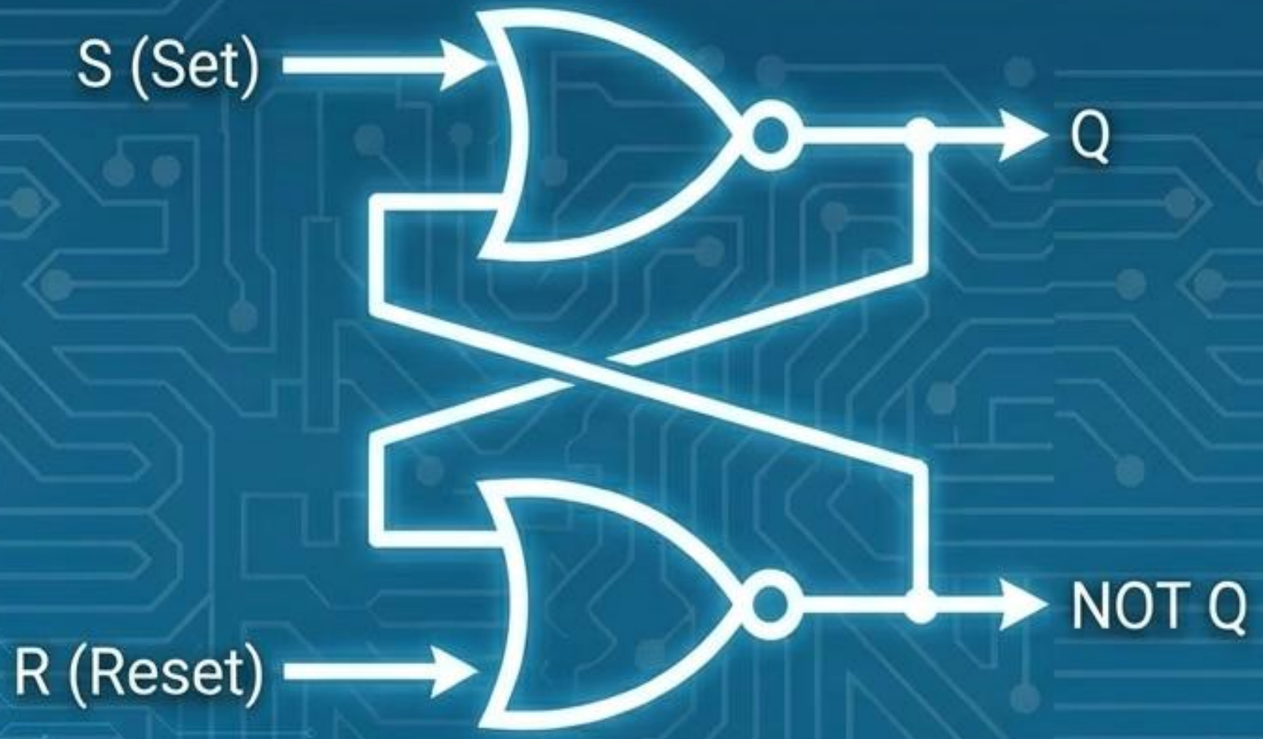

The mechanism of memory is feedback.

- Trigger S: Sets Q to 1
- Trigger R: Resets Q to 0
- Inputs 0,0: The system Holds its last state (Memory)

TIMING & SYNCHRONIZATION

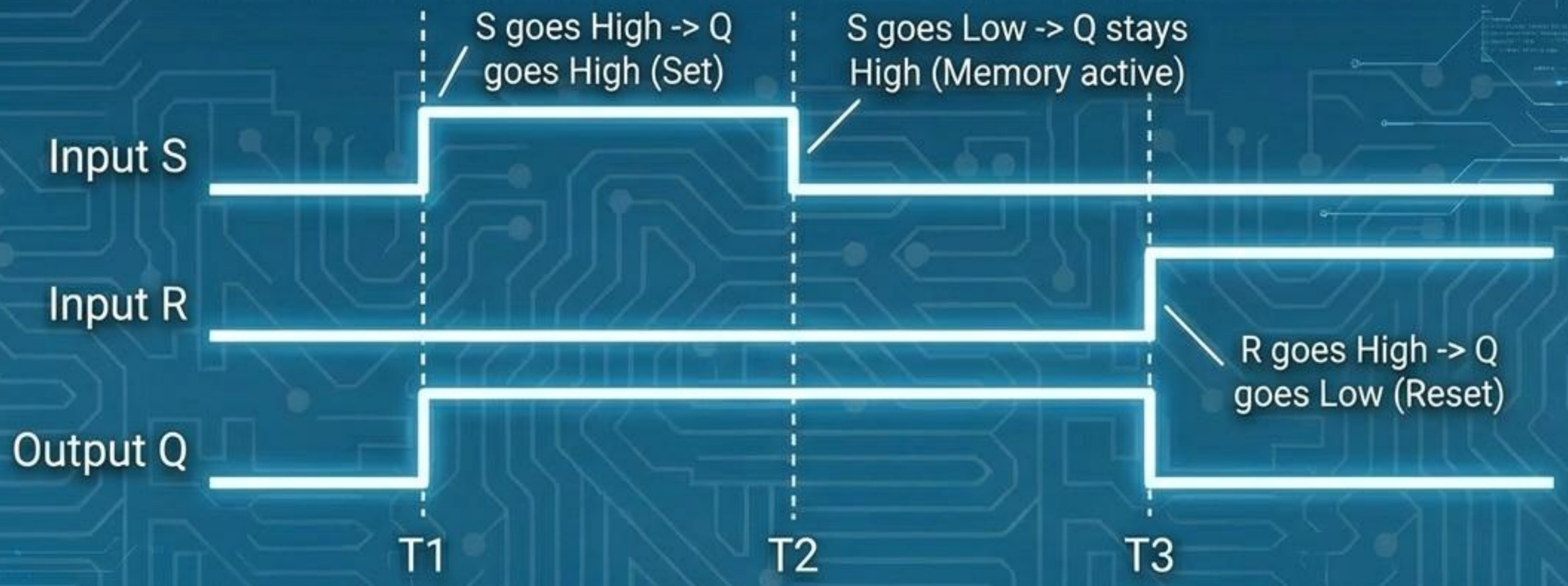

In sequential logic, we don't just look at voltage levels; we look at transitions over time.

APPLICATION: THE SAFETY INTERLOCK

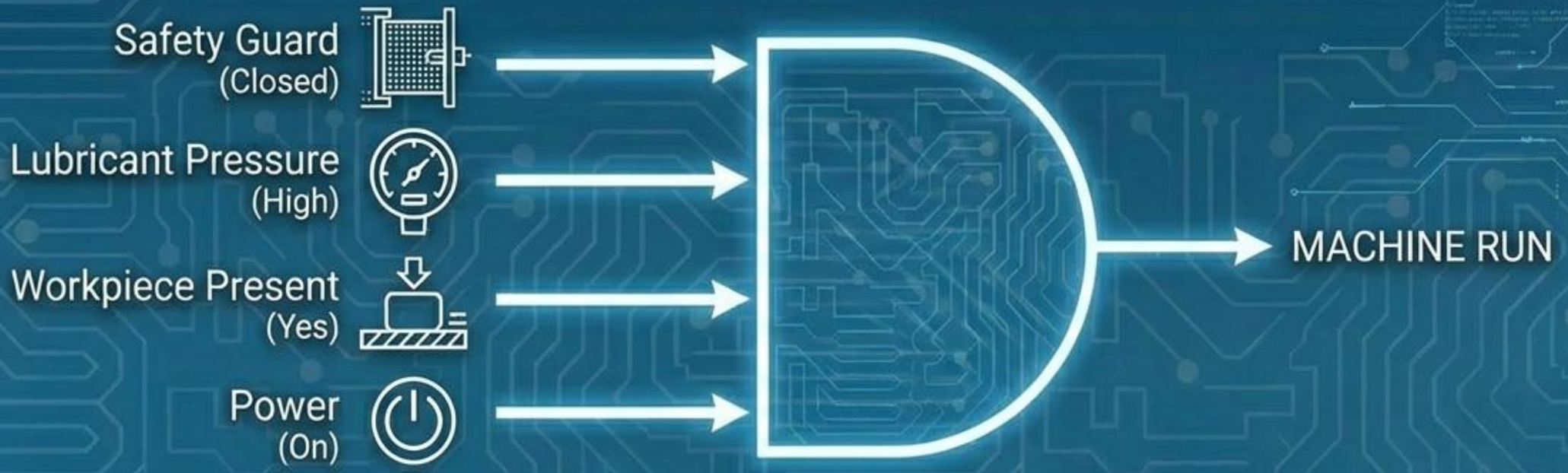

Equation: Guard · Lube · Piece · Power = RUN

The AND gate acts as the ultimate safety checklist. If any single variable is 0, the machine will not start.

APPLICATION: PUMP CONTROL SYSTEM

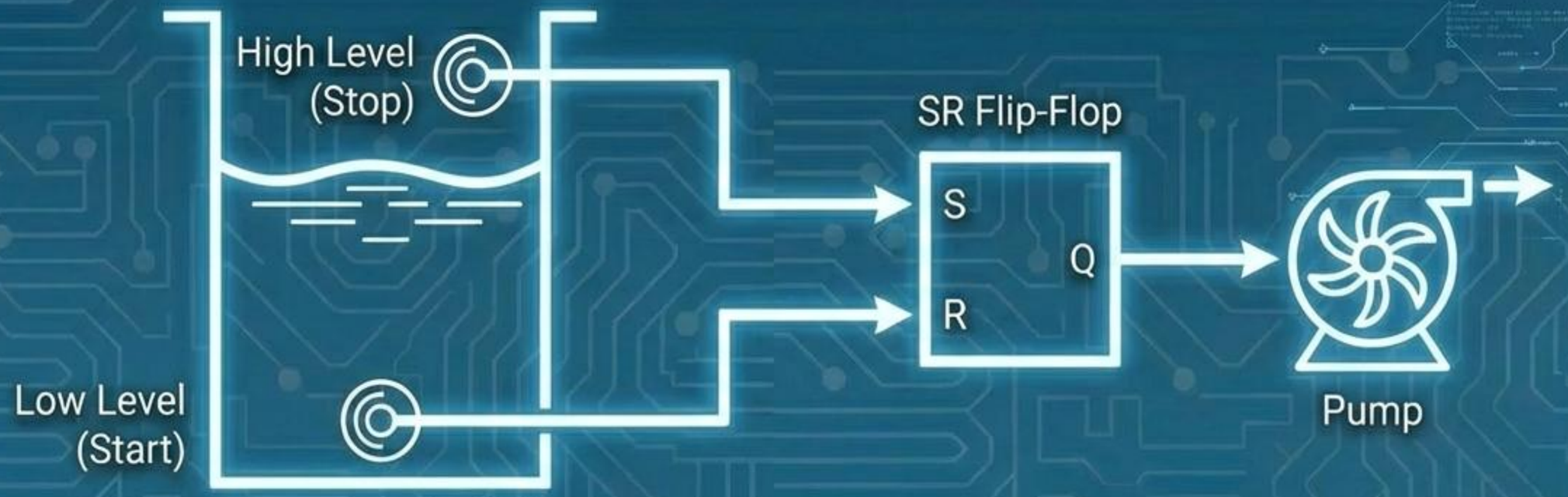

Combinational logic would cause the pump to stutter at the water line. Sequential logic uses memory (Hysteresis) to keep the pump running until the tank is full, and off until the tank is empty.

Summary: The Anatomy of a Decision

- **Binary Foundation**: Mechatronics reduces the physical world to voltage states (0s and 1s).
- **Combinational Logic**: Uses Gates (AND/OR/NOT) to make immediate, rule-based decisions.
- **Sequential Logic**: Uses Flip-Flops and Clocks to add memory and time-based control.

"Complex automation is built on simple logical rules."