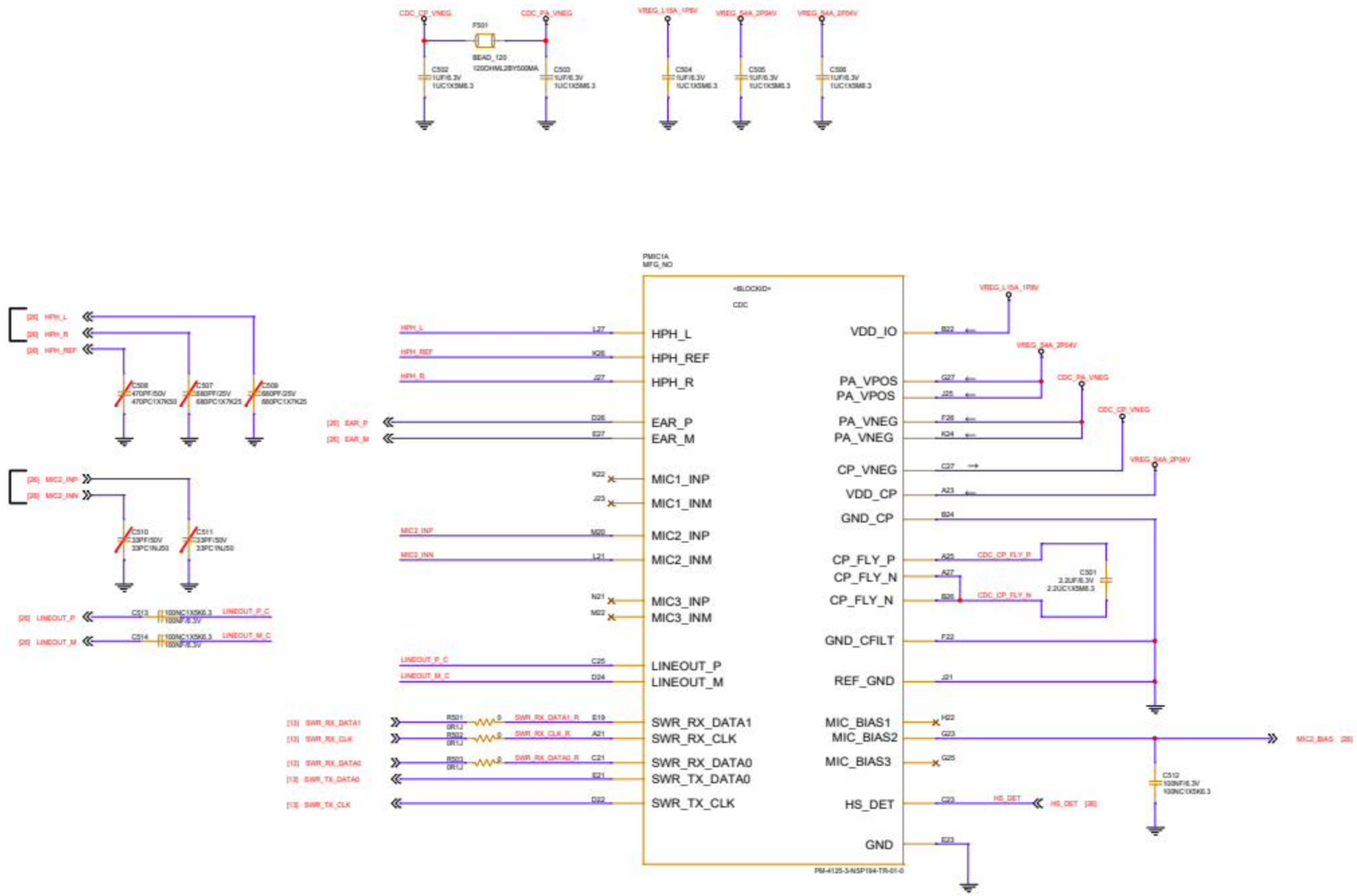

Reference Designs ARE PROVIDED "AS IS" AND "WITH ALL FAULTS". Arduino SA DISCLAIMS ALL OTHER WARRANTIES, EXPRESS OR IMPLIED, REGARDING PRODUCTS, INCLUDING BUT NOT LIMITED TO, ANY IMPLIED WARRANTIES OF MERCHANTABILITY OR FITNESS FOR A PARTICULAR PURPOSE. Arduino SA may make changes to specifications and product descriptions at any time, without notice. The Customer must not rely on the absence or characteristics of any features or instructions marked "reserved" or "undefined". Arduino SA reserves these for future definition and shall have no responsibility whatsoever for conflicts or incompatibilities arising from future changes to them. The product information on the Web Site or Materials is subject to change without notice. Do not finalize a design with this info. ARDUINO and other Arduino brands and logos are Trademarks of Arduino SA. All Arduino SA Trademarks cannot be used without owner's formal permission.
This project's hardware is licensed under the Creative Commons Attribution-ShareAlike 4.0 International License. To view a copy of this license, visit https://creativecommons.org/licenses/by-sa/4.0/deed.en

Title: PM4125-CDC
ID: ABX00162
Version:
Date: 01/10/2023 Time: 13:00:00 Sheet 1 of 21

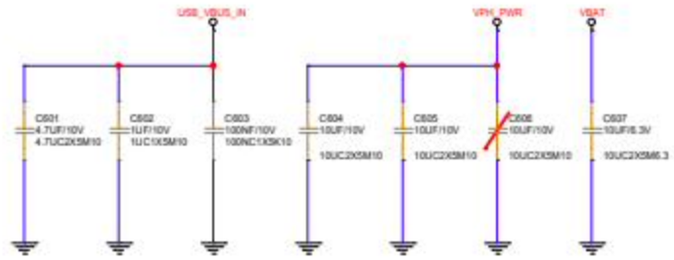

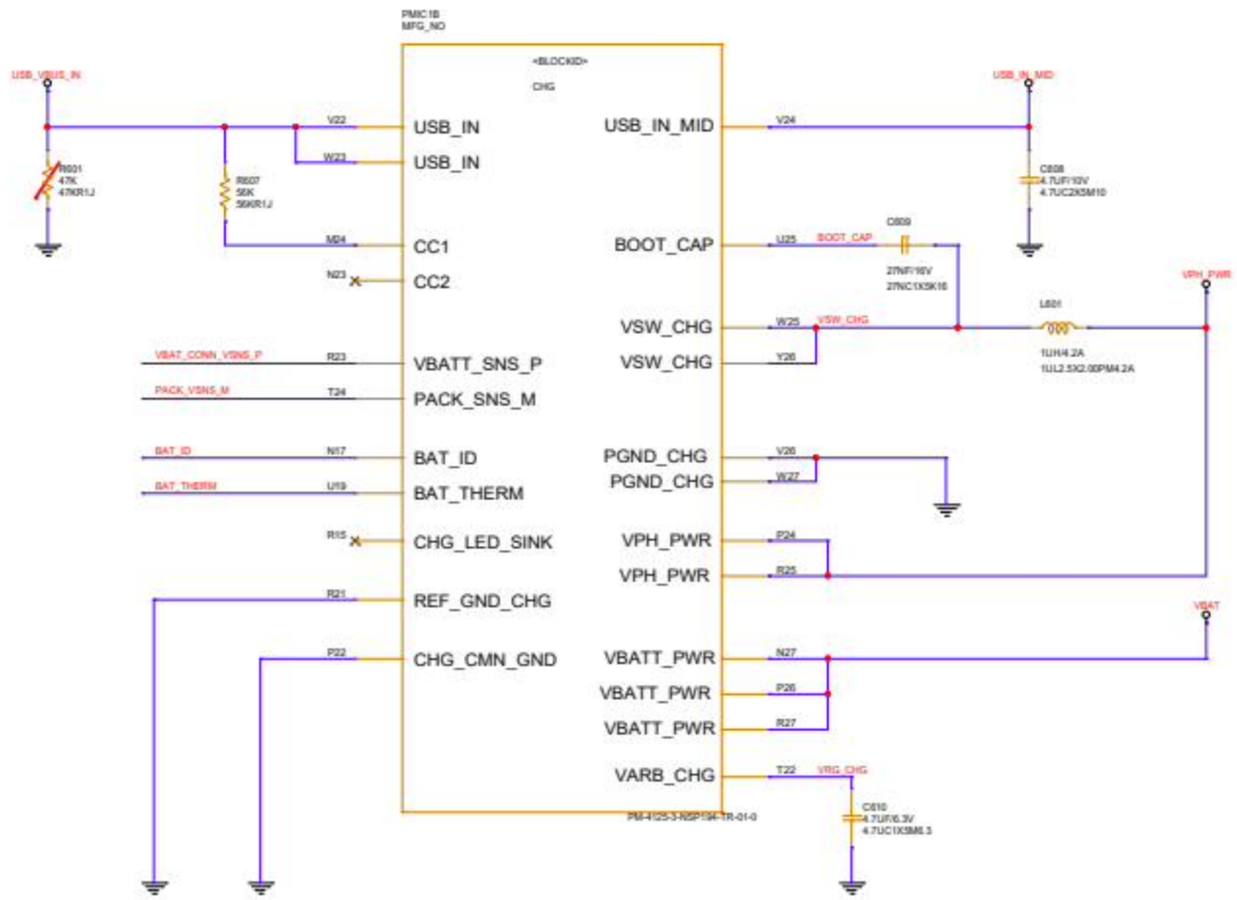

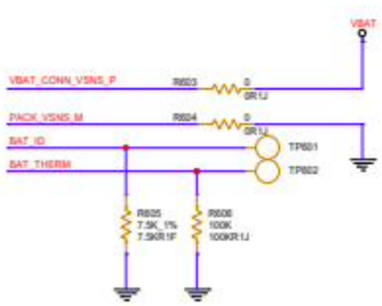

Reference Designs ARE PROVIDED "AS IS" AND "WITH ALL FAULTS". Arduino SA DISCLAIMS ALL OTHER WARRANTIES, EXPRESS OR IMPLIED, REGARDING PRODUCTS, INCLUDING BUT NOT LIMITED TO, ANY IMPLIED WARRANTIES OF MERCHANTABILITY OR FITNESS FOR A PARTICULAR PURPOSE. Arduino SA may make changes to specifications and product descriptions at any time, without notice. The Customer must not rely on the absence or characteristics of any features or instructions marked "reserved" or "undefined". Arduino SA reserves these for future definition and shall have no responsibility whatsoever for conflicts or incompatibilities arising from future changes to them. The product information on the Web Site or Materials is subject to change without notice. Do not finalize a design with this info. ARDUINO and other Arduino brands and logos are Trademarks of Arduino SA. All Arduino SA Trademarks cannot be used without owner's formal permission.
This project's hardware is licensed under the Creative Commons Attribution-ShareAlike 4.0 International License. To view a copy of this license, visit https://creativecommons.org/licenses/by-sa/4.0/deed.en

Title: PM4125-CHG
ID: ABX00162
Version:
Date: 01/01/2021 Time: 00:00:00
Sheet 2 of 22

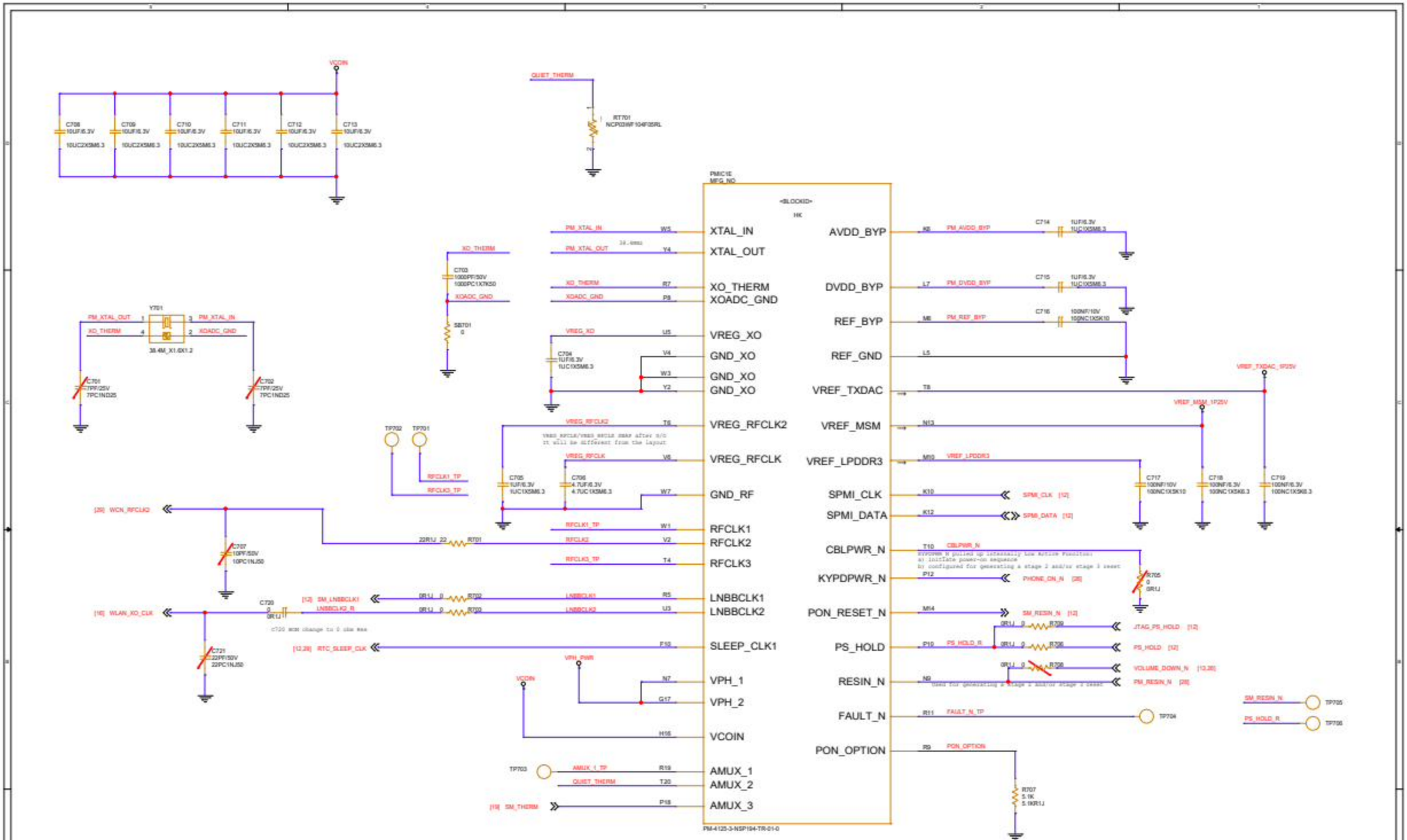

Reference Designs ARE PROVIDED "AS IS" AND "WITH ALL FAULTS". Arduino SA DISCLAIMS ALL OTHER WARRANTIES, EXPRESS OR IMPLIED, REGARDING PRODUCTS, INCLUDING BUT NOT LIMITED TO, ANY IMPLIED WARRANTIES OF MERCHANTABILITY OR FITNESS FOR A PARTICULAR PURPOSE. Arduino SA may make changes to specifications and product descriptions at any time, without notice. The Customer must not rely on the absence or characteristics of any features or instructions marked "reserved" or "undefined". Arduino SA reserves these for future definition and shall have no responsibility whatsoever for conflicts or incompatibilities arising from future changes to them. The product information on the Web Site or Materials is subject to change without notice. Do not finalize a design with this info. ARDUINO and other Arduino brands and logos are Trademarks of Arduino SA. All Arduino SA Trademarks cannot be used without owner's formal permission.
This project's hardware is licensed under the Creative Commons Attribution-ShareAlike 4.0 International License. To view a copy of this license, visit https://creativecommons.org/licenses/by-sa/4.0/deed.en

Title: PM4125-HK
ID: ABX00162
Version:
Date: 00/00/2021 Time: 12:00:00
Sheet 1 of 24

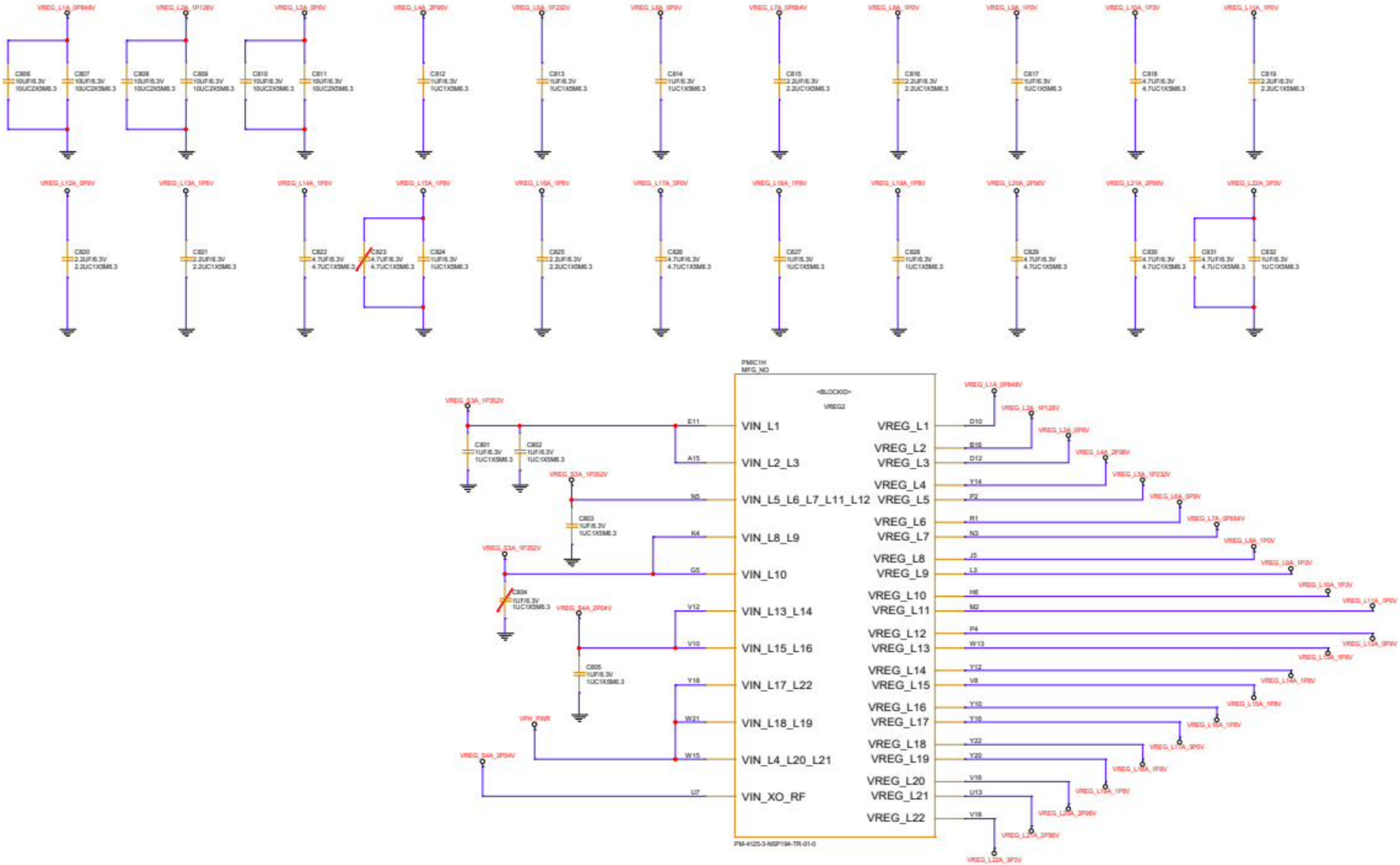

Reference Designs ARE PROVIDED "AS IS" AND "WITH ALL FAULTS". Arduino SA DISCLAIMS ALL OTHER WARRANTIES, EXPRESS OR IMPLIED, REGARDING PRODUCTS, INCLUDING BUT NOT LIMITED TO, ANY IMPLIED WARRANTIES OF MERCHANTABILITY OR FITNESS FOR A PARTICULAR PURPOSE. Arduino SA may make changes to specifications and product descriptions at any time, without notice. The Customer must not rely on the absence or characteristics of any features or instructions marked "reserved" or "undefined". Arduino SA reserves these for future definition and shall have no responsibility whatsoever for conflicts or incompatibilities arising from future changes to them. The product information on the Web Site or Materials is subject to change without notice. Do not finalize a design with this info. ARDUINO and other Arduino brands and logos are Trademarks of Arduino SA. All Arduino SA Trademarks cannot be used without owner's formal permission.
This project's hardware is licensed under the Creative Commons Attribution-ShareAlike 4.0 International License. To view a copy of this license, visit https://creativecommons.org/licenses/by-sa/4.0/deed.en

Title: PM4125-LDO		
ID: ABX00162	Version:	
Date: 00/00/2023 Time: 13:00:00	Sheet 4 of 26	

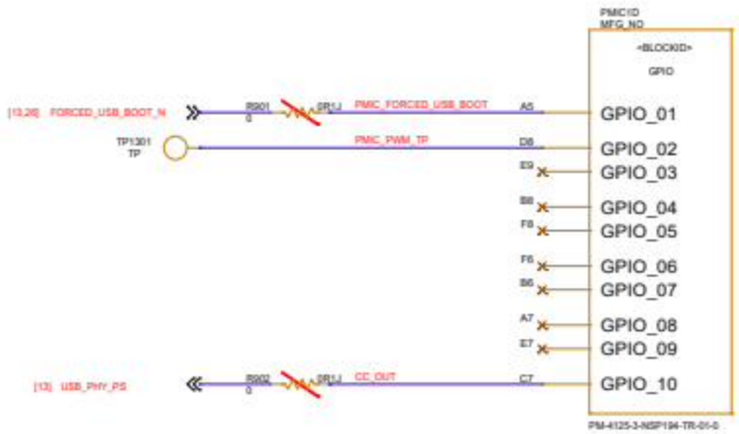

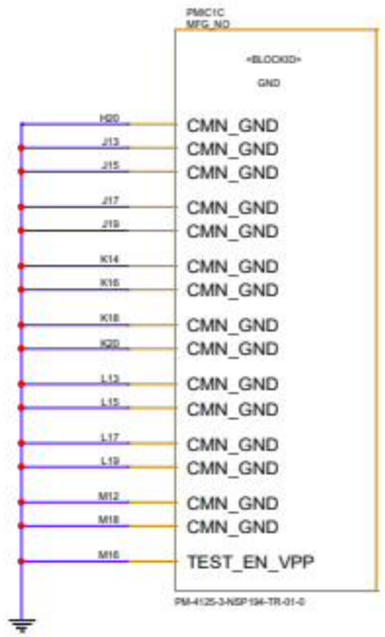

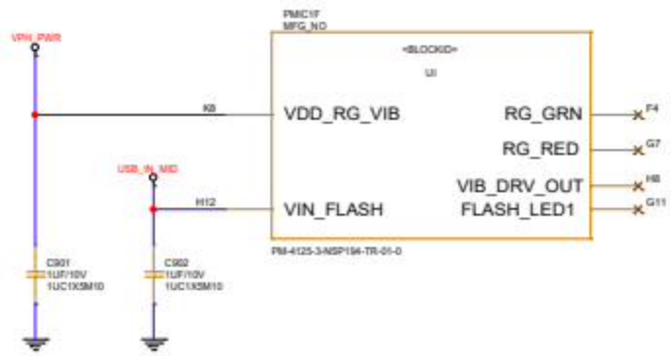

Reference Designs ARE PROVIDED "AS IS" AND "WITH ALL FAULTS". Arduino SA DISCLAIMS ALL OTHER WARRANTIES, EXPRESS OR IMPLIED, REGARDING PRODUCTS, INCLUDING BUT NOT LIMITED TO, ANY IMPLIED WARRANTIES OF MERCHANTABILITY OR FITNESS FOR A PARTICULAR PURPOSE. Arduino SA may make changes to specifications and product descriptions at any time, without notice. The Customer must not rely on the absence or characteristics of any features or instructions marked "reserved" or "undefined". Arduino SA reserves these for future definition and shall have no responsibility whatsoever for conflicts or incompatibilities arising from future changes to them. The product information on the Web Site or Materials is subject to change without notice. Do not finalize a design with this info. ARDUINO and other Arduino brands and logos are Trademarks of Arduino SA. All Arduino SA Trademarks cannot be used without owner's formal permission.
This project's hardware is licensed under the Creative Commons Attribution-ShareAlike 4.0 International License. To view a copy of this license, visit https://creativecommons.org/licenses/by-sa/4.0/deed.en

Title: PM4125-UI		
ID: ABX00162	Version:	
Date: 05/10/2023 Time: 13:00:00	Sheet: 3 of 28	

ARDUINO

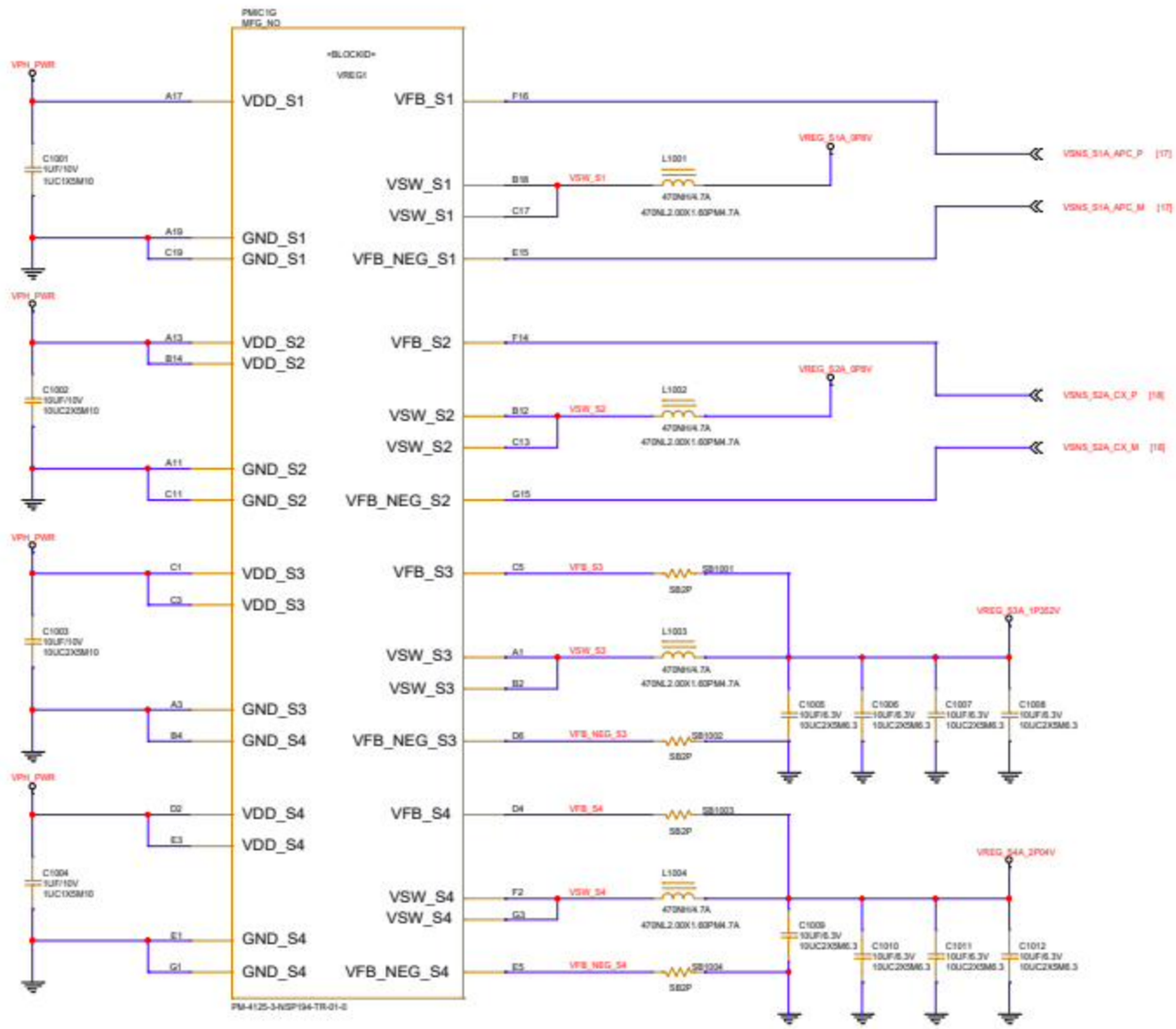

Reference Designs ARE PROVIDED "AS IS" AND "WITH ALL FAULTS". Arduino SA DISCLAIMS ALL OTHER WARRANTIES, EXPRESS OR IMPLIED, REGARDING PRODUCTS, INCLUDING BUT NOT LIMITED TO, ANY IMPLIED WARRANTIES OF MERCHANTABILITY OR FITNESS FOR A PARTICULAR PURPOSE. Arduino SA may make changes to specifications and product descriptions at any time, without notice. The Customer must not rely on the absence or characteristics of any features or instructions marked "reserved" or "undefined". Arduino SA reserves these for future definition and shall have no responsibility whatsoever for conflicts or incompatibilities arising from future changes to them. The product information on the Web Site or Materials is subject to change without notice. Do not finalize a design with this info. ARDUINO and other Arduino brands and logos are Trademarks of Arduino SA. All Arduino SA Trademarks cannot be used without owner's formal permission.
This project's hardware is licensed under the Creative Commons Attribution-ShareAlike 4.0 International License. To view a copy of this license, visit https://creativecommons.org/licenses/by-sa/4.0/deed.en

Title: PM4125-VREG
ID: ABX00162
Date: 00/00/2023 Time: 12:00:00
Version:
Sheet 8 of 28

3.3V to 1.8V level shift

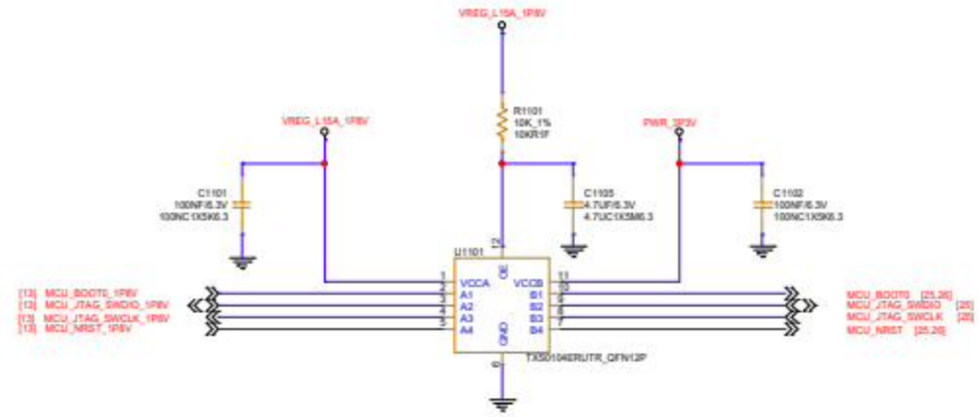

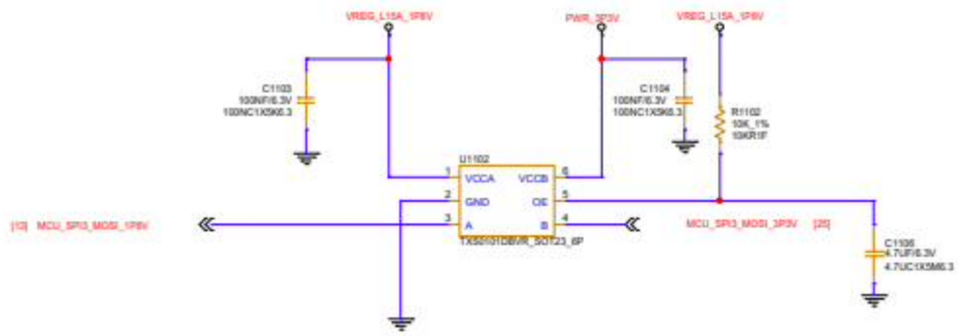

Reference Designs ARE PROVIDED "AS IS" AND "WITH ALL FAULTS". Arduino SA DISCLAIMS ALL OTHER WARRANTIES, EXPRESS OR IMPLIED, REGARDING PRODUCTS, INCLUDING BUT NOT LIMITED TO, ANY IMPLIED WARRANTIES OF MERCHANTABILITY OR FITNESS FOR A PARTICULAR PURPOSE. Arduino SA may make changes to specifications and product descriptions at any time, without notice. The Customer must not rely on the absence or characteristics of any features or instructions marked "reserved" or "undefined". Arduino SA reserves these for future definition and shall have no responsibility whatsoever for conflicts or incompatibilities arising from future changes to them. The product information on the Web Site or Materials is subject to change without notice. Do not finalize a design with this info. ARDUINO and other Arduino brands and logos are Trademarks of Arduino SA. All Arduino SA Trademarks cannot be used without owner's formal permission.
This project's hardware is licensed under the Creative Commons Attribution-ShareAlike 4.0 International License. To view a copy of this license, visit https://creativecommons.org/licenses/by-sa/4.0/deed.en

Title: Level Shift		
ID: ABX00162	Version:	
Date: [illegible]	Time: [illegible]	Sheet 7 of 34

ARDUINO

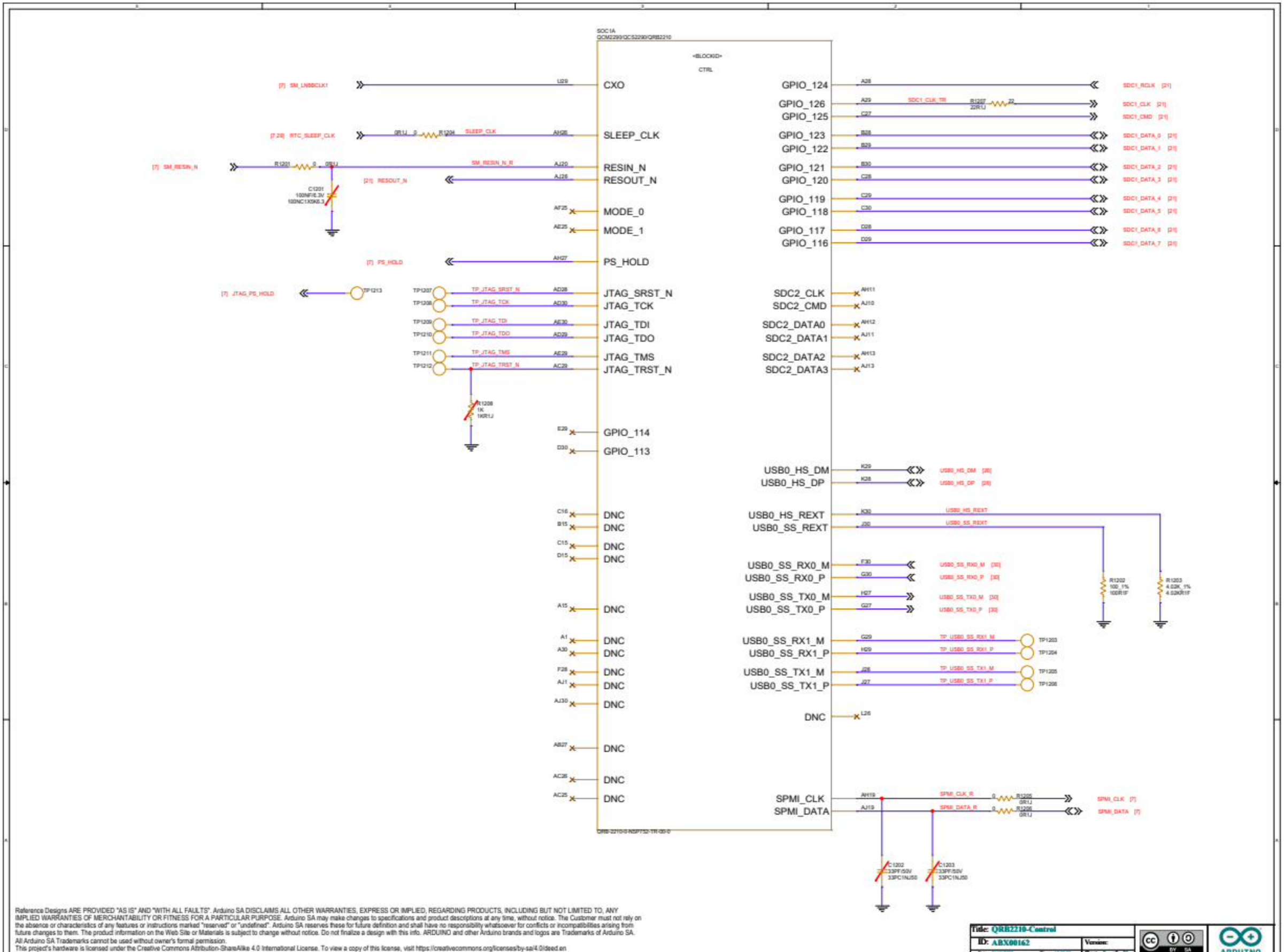

Reference Designs ARE PROVIDED "AS IS" AND "WITH ALL FAULTS". Arduino SA DISCLAIMS ALL OTHER WARRANTIES, EXPRESS OR IMPLIED, REGARDING PRODUCTS, INCLUDING BUT NOT LIMITED TO, ANY IMPLIED WARRANTIES OF MERCHANTABILITY OR FITNESS FOR A PARTICULAR PURPOSE. Arduino SA may make changes to specifications and product descriptions at any time, without notice. The Customer must not rely on the absence or characteristics of any features or instructions marked "reserved" or "undefined". Arduino SA reserves these for future definition and shall have no responsibility whatsoever for conflicts or incompatibilities arising from future changes to them. The product information on the Web Site or Materials is subject to change without notice. Do not finalize a design with this info. ARDUINO and other Arduino brands and logos are Trademarks of Arduino SA. All Arduino SA Trademarks cannot be used without owner's formal permission.
This project's hardware is licensed under the Creative Commons Attribution-ShareAlike 4.0 International License. To view a copy of this license, visit https://creativecommons.org/licenses/by-sa/4.0/deed.en

Title: QRB2210-Control
ID: ABX00162
Version:
Date: 01/10/2023 Time: 13:00:00 Sheet: 8 of 28

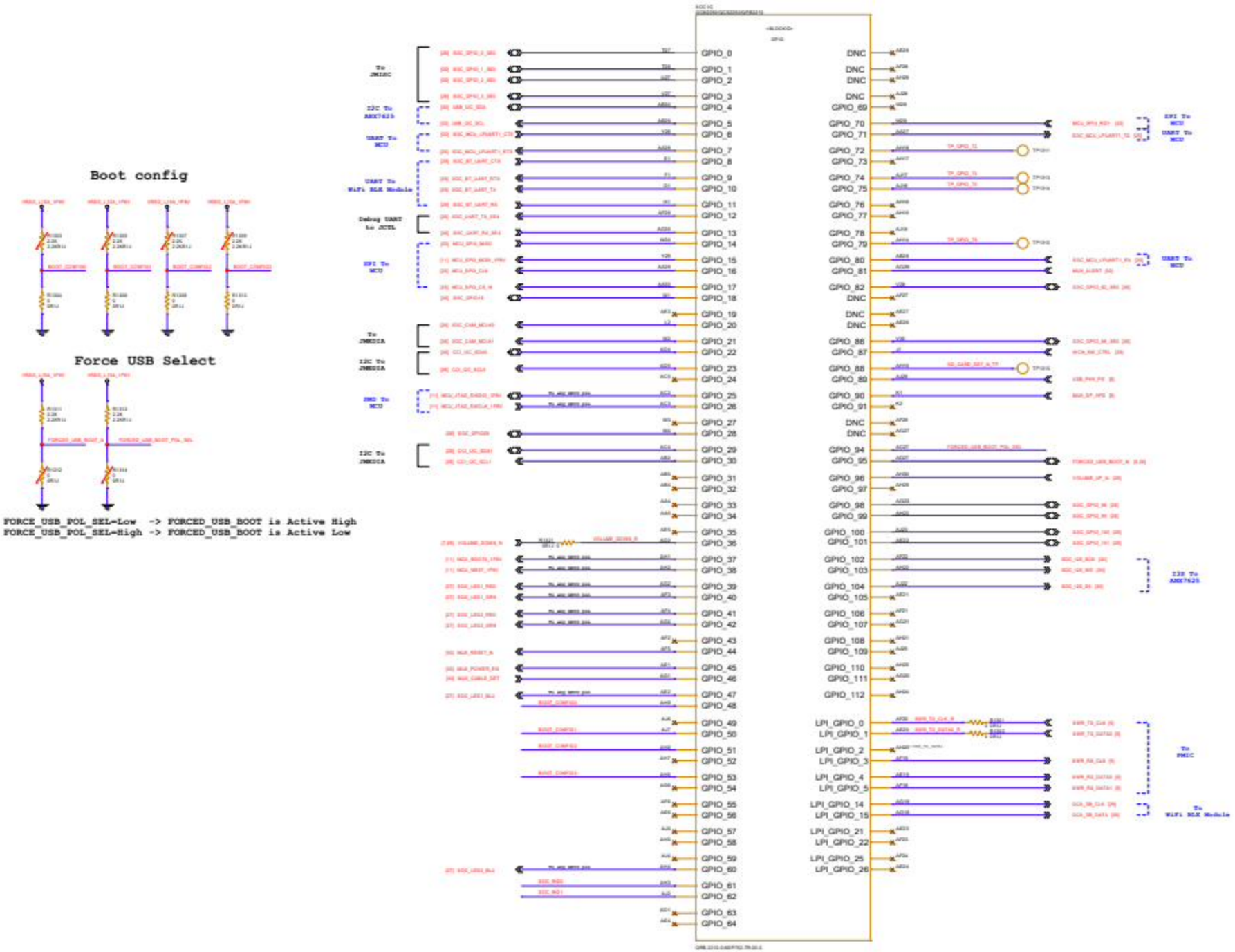

Reference Designs ARE PROVIDED "AS IS" AND "WITH ALL FAULTS". Arduino SA DISCLAIMS ALL OTHER WARRANTIES, EXPRESS OR IMPLIED, REGARDING PRODUCTS, INCLUDING BUT NOT LIMITED TO, ANY IMPLIED WARRANTIES OF MERCHANTABILITY OR FITNESS FOR A PARTICULAR PURPOSE. Arduino SA may make changes to specifications and product descriptions at any time, without notice. The Customer must not rely on the absence or characteristics of any features or instructions marked "reserved" or "undefined". Arduino SA reserves these for future definition and shall have no responsibility whatsoever for conflicts or incompatibilities arising from future changes to them. The product information on the Web Site or Materials is subject to change without notice. Do not finalize a design with this info. ARDUINO and other Arduino brands and logos are Trademarks of Arduino SA.
All Arduino SA Trademarks cannot be used without owner's formal permission.
This project's hardware is licensed under the Creative Commons Attribution-ShareAlike 4.0 International License. To view a copy of this license, visit https://creativecommons.org/licenses/by-sa/4.0/deed.en

Title: QRB2210-GPIO
ID: ABX00162
Version:

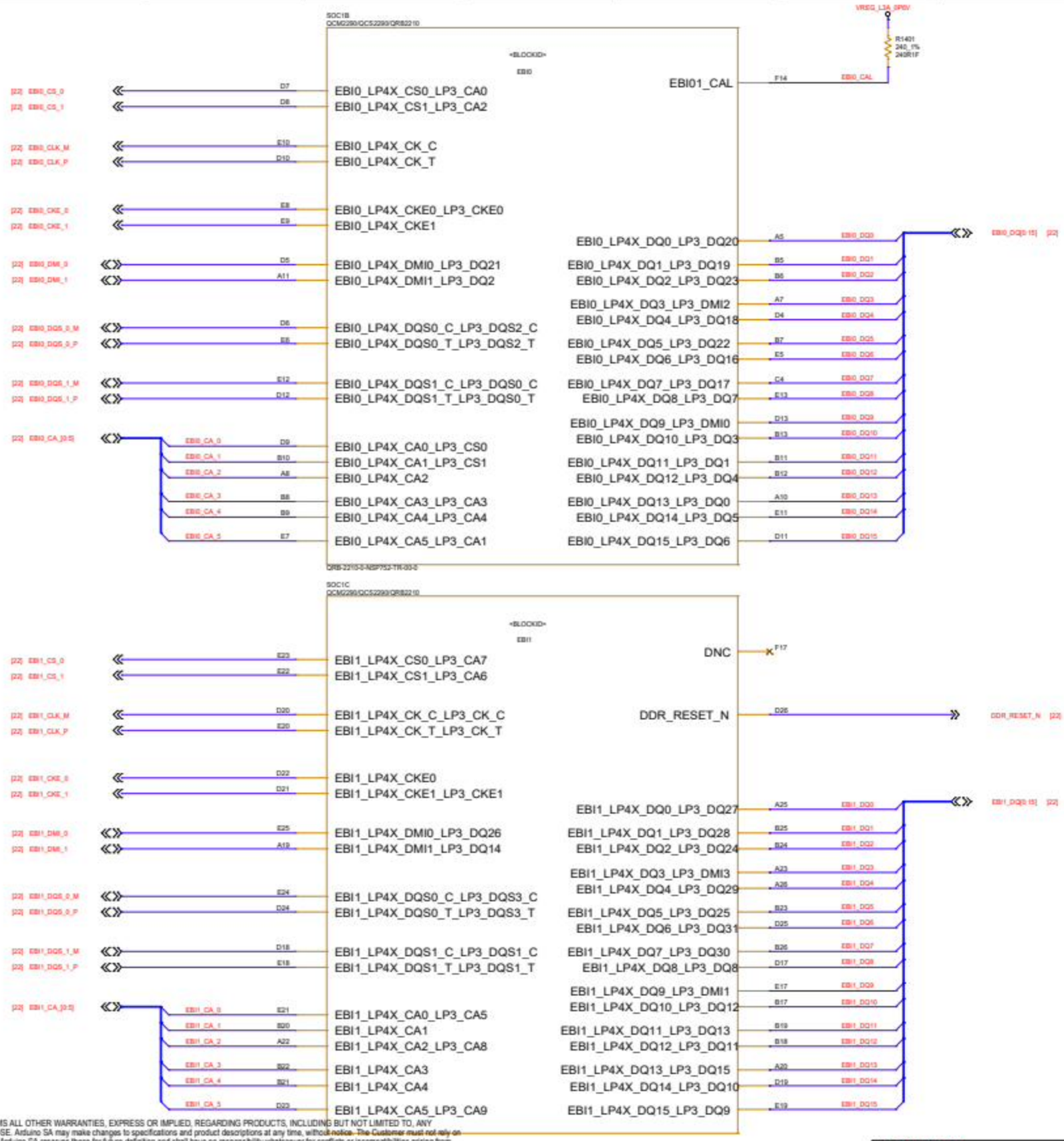

Reference Designs ARE PROVIDED "AS IS" AND "WITH ALL FAULTS". Arduino SA DISCLAIMS ALL OTHER WARRANTIES, EXPRESS OR IMPLIED, REGARDING PRODUCTS, INCLUDING BUT NOT LIMITED TO, ANY IMPLIED WARRANTIES OF MERCHANTABILITY OR FITNESS FOR A PARTICULAR PURPOSE. Arduino SA may make changes to specifications and product descriptions at any time, without notice. The Customer must not rely on the absence or characteristics of any features or instructions marked "reserved" or "undefined". Arduino SA reserves these for future definition and shall have no responsibility whatsoever for conflicts or incompatibilities arising from future changes to them. The product information on the Web Site or Materials is subject to change without notice. Do not finalize a design with this info. ARDUINO and other Arduino brands and logos are Trademarks of Arduino SA.
All Arduino SA Trademarks cannot be used without owner's formal permission.
This project's hardware is licensed under the Creative Commons Attribution-ShareAlike 4.0 International License. To view a copy of this license, visit https://creativecommons.org/licenses/by-sa/4.0/deed.en

Title: QRB2210-EBI
ID: ABX00162
Version:
Date: 00/00/2023 Time: 10:00:00 Sheet 10 of 26

Reference Designs ARE PROVIDED "AS IS" AND "WITH ALL FAULTS". Arduino SA DISCLAIMS ALL OTHER WARRANTIES, EXPRESS OR IMPLIED, REGARDING PRODUCTS, INCLUDING BUT NOT LIMITED TO, ANY IMPLIED WARRANTIES OF MERCHANTABILITY OR FITNESS FOR A PARTICULAR PURPOSE. Arduino SA may make changes to specifications and product descriptions at any time, without notice. The Customer must not rely on the absence or characteristics of any features or instructions marked "reserved" or "undefined". Arduino SA reserves these for future definition and shall have no responsibility whatsoever for conflicts or incompatibilities arising from future changes to them. The product information on the Web Site or Materials is subject to change without notice. Do not finalize a design with this info. ARDUINO and other Arduino brands and logos are Trademarks of Arduino SA. All Arduino SA Trademarks cannot be used without owner's formal permission.
This project's hardware is licensed under the Creative Commons Attribution-ShareAlike 4.0 International License. To view a copy of this license, visit https://creativecommons.org/licenses/by-sa/4.0/deed.en

Title: QRB2210-MIPI
ID: ABX00162
Version:
Date: 01/10/2023 Time: 12:00:00 Sheet 11 of 24

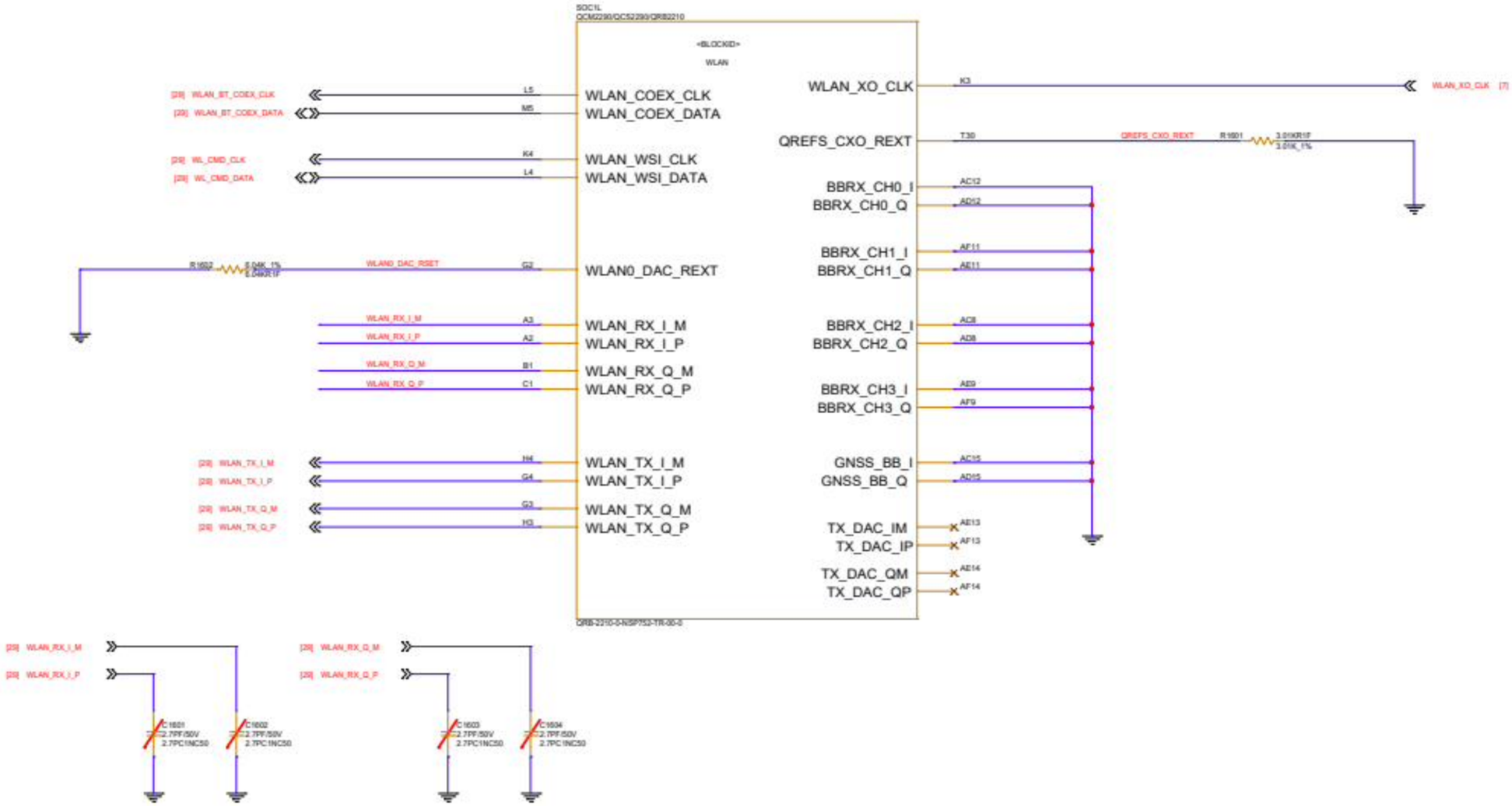

Reference Designs ARE PROVIDED "AS IS" AND "WITH ALL FAULTS". Arduino SA DISCLAIMS ALL OTHER WARRANTIES, EXPRESS OR IMPLIED, REGARDING PRODUCTS, INCLUDING BUT NOT LIMITED TO, ANY IMPLIED WARRANTIES OF MERCHANTABILITY OR FITNESS FOR A PARTICULAR PURPOSE. Arduino SA may make changes to specifications and product descriptions at any time, without notice. The Customer must not rely on the absence or characteristics of any features or instructions marked "reserved" or "undefined". Arduino SA reserves these for future definition and shall have no responsibility whatsoever for conflicts or incompatibilities arising from future changes to them. The product information on the Web Site or Materials is subject to change without notice. Do not finalize a design with this info. ARDUINO and other Arduino brands and logos are Trademarks of Arduino SA. All Arduino SA Trademarks cannot be used without owner's formal permission.
This project's hardware is licensed under the Creative Commons Attribution-ShareAlike 4.0 International License. To view a copy of this license, visit https://creativecommons.org/licenses/by-sa/4.0/deed.en

Title: QRB2210-WLAN		
ID: ABX00162	Version:	
Date: 01/10/2023 Time: 13:09:49	Sheet: 12 of 24	

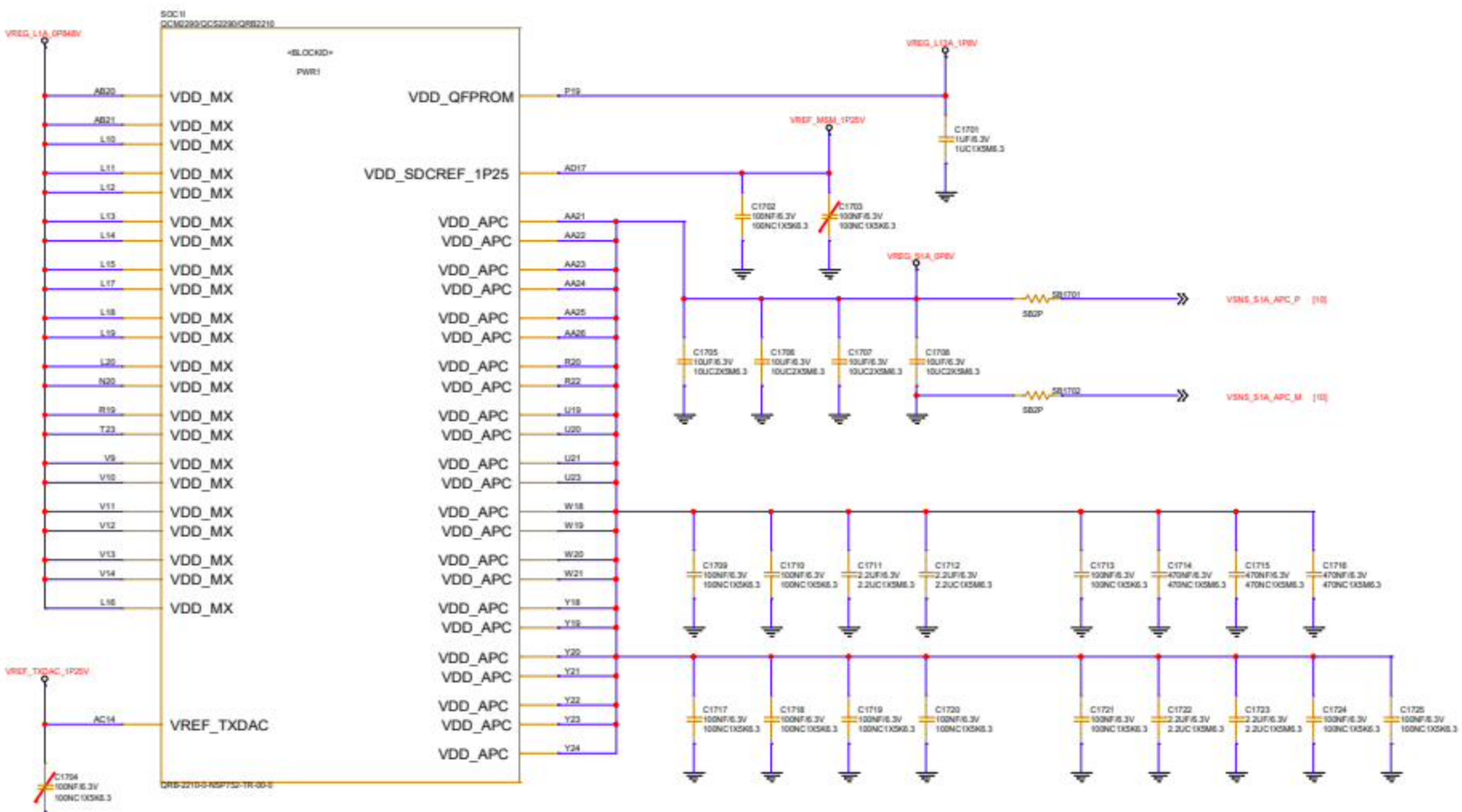

Reference Designs ARE PROVIDED "AS IS" AND "WITH ALL FAULTS". Arduino SA DISCLAIMS ALL OTHER WARRANTIES, EXPRESS OR IMPLIED, REGARDING PRODUCTS, INCLUDING BUT NOT LIMITED TO, ANY IMPLIED WARRANTIES OF MERCHANTABILITY OR FITNESS FOR A PARTICULAR PURPOSE. Arduino SA may make changes to specifications and product descriptions at any time, without notice. The Customer must not rely on the absence or characteristics of any features or instructions marked "reserved" or "undefined". Arduino SA reserves these for future definition and shall have no responsibility whatsoever for conflicts or incompatibilities arising from future changes to them. The product information on the Web Site or Materials is subject to change without notice. Do not finalize a design with this info. ARDUINO and other Arduino brands and logos are Trademarks of Arduino SA. All Arduino SA Trademarks cannot be used without owner's formal permission.
This project's hardware is licensed under the Creative Commons Attribution-ShareAlike 4.0 International License. To view a copy of this license, visit https://creativecommons.org/licenses/by-sa/4.0/deed.en

Title: QRB2210-PWR1
ID: ABX00162
Version:
Date: 00/00/0000 Time: 00:00:00 Sheet 10 of 24

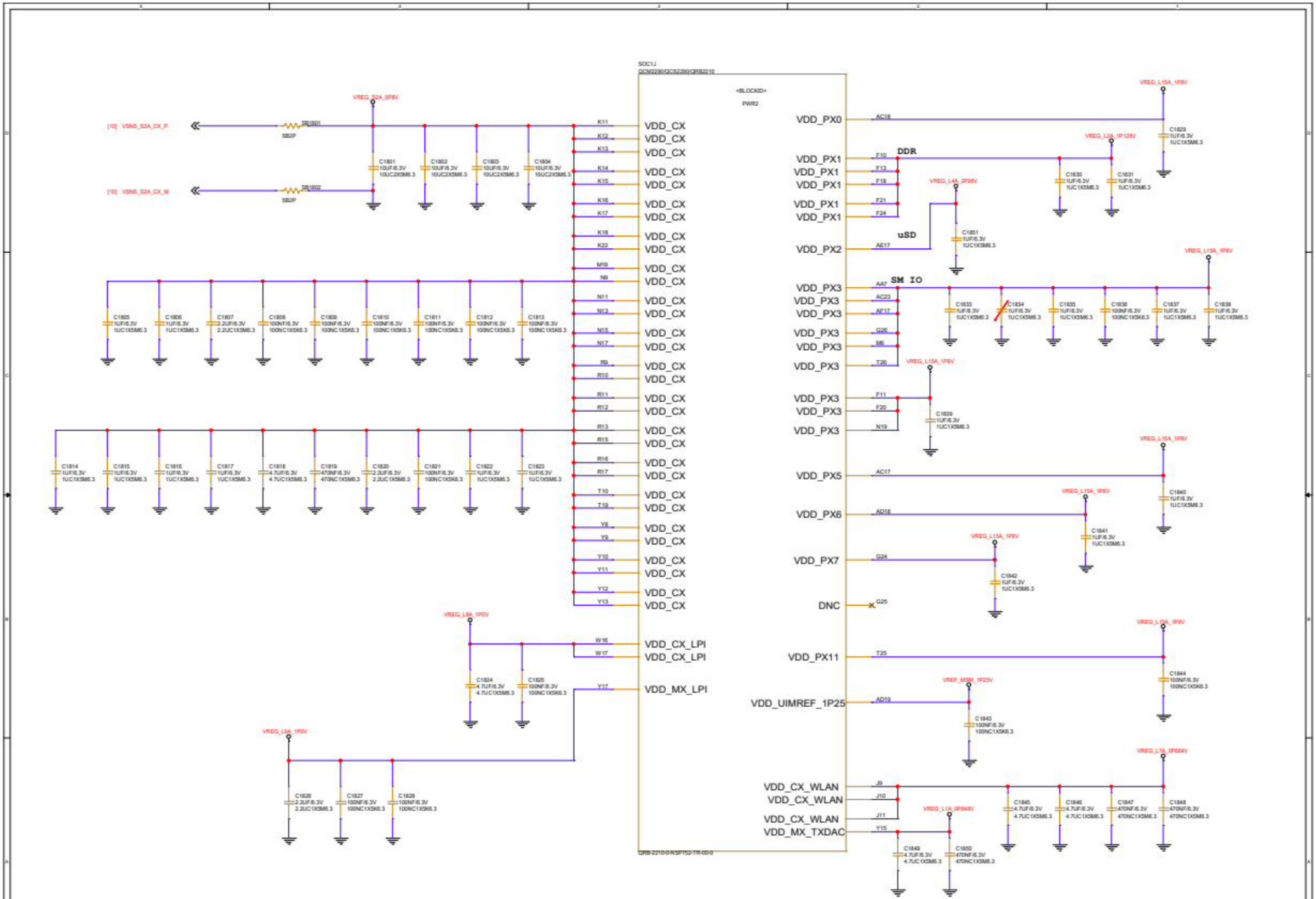

Reference Designs ARE PROVIDED "AS IS" AND "WITH ALL FAULTS". Arduino SA DISCLAIMS ALL OTHER WARRANTIES, EXPRESS OR IMPLIED, REGARDING PRODUCTS, INCLUDING BUT NOT LIMITED TO, ANY IMPLIED WARRANTIES OF MERCHANTABILITY OR FITNESS FOR A PARTICULAR PURPOSE. Arduino SA may make changes to specifications and product descriptions at any time, without notice. The Customer must not rely on the absence or characteristics of any features or instructions marked "reserved" or "undefined". Arduino SA reserves these for future definition and shall have no responsibility whatsoever for conflicts or incompatibilities arising from future changes to them. The product information on the Web Site or Materials is subject to change without notice. Do not finalize a design with this info. ARDUINO and other Arduino brands and logos are Trademarks of Arduino SA.
All Arduino SA Trademarks cannot be used without owner's formal permission.
This project's hardware is licensed under the Creative Commons Attribution-ShareAlike 4.0 International License. To view a copy of this license, visit https://creativecommons.org/licenses/by-sa/4.0/deed.en

Title: QRB2210-PWR2
ID: ABX00162
Version:
Date: 00/00/2023 Time: 13:00:00
Sheet 14 of 26

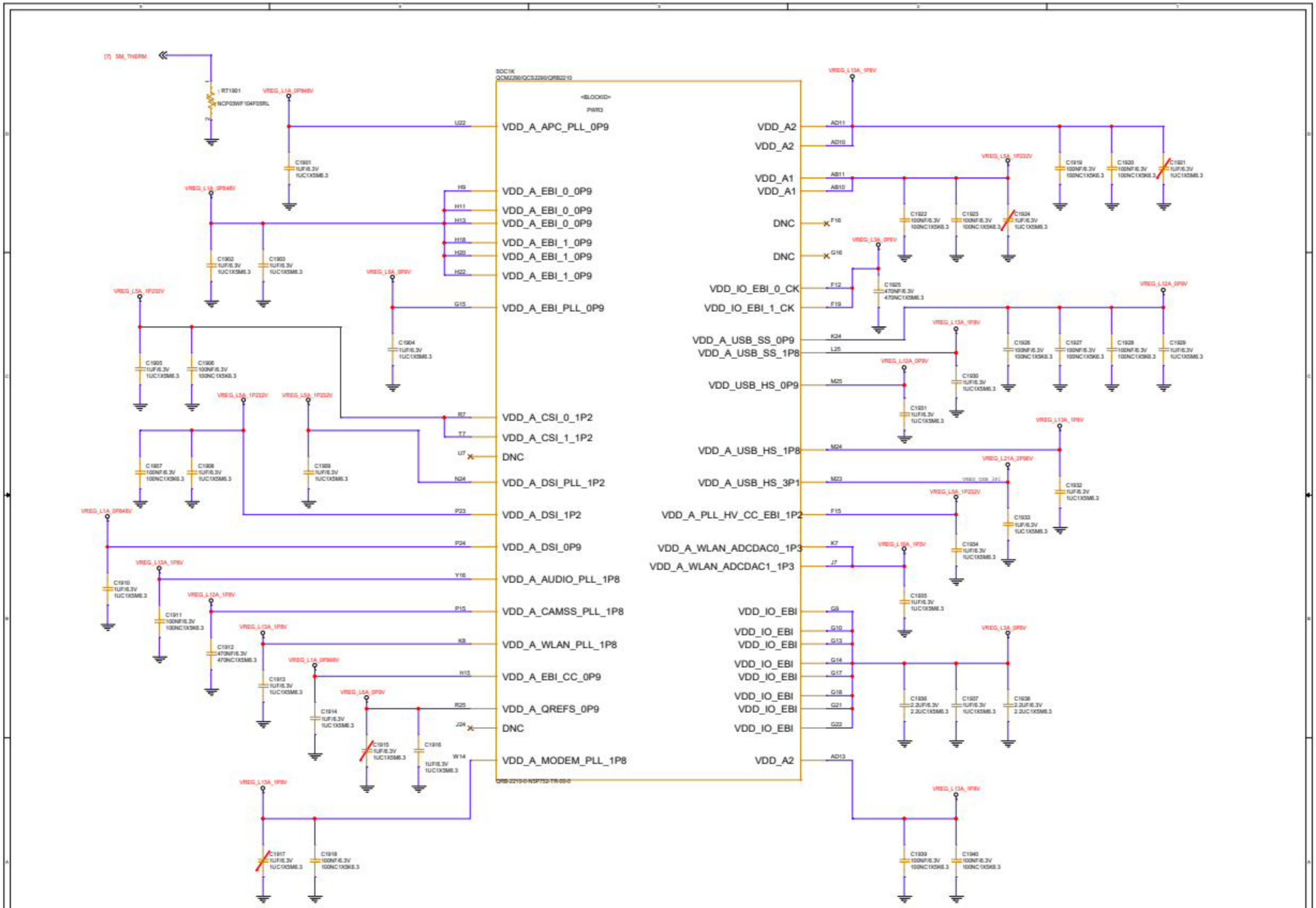

Reference Designs ARE PROVIDED "AS IS" AND "WITH ALL FAULTS". Arduino SA DISCLAIMS ALL OTHER WARRANTIES, EXPRESS OR IMPLIED, REGARDING PRODUCTS, INCLUDING BUT NOT LIMITED TO, ANY IMPLIED WARRANTIES OF MERCHANTABILITY OR FITNESS FOR A PARTICULAR PURPOSE. Arduino SA may make changes to specifications and product descriptions at any time, without notice. The Customer must not rely on the absence or characteristics of any features or instructions marked "reserved" or "undefined". Arduino SA reserves these for future definition and shall have no responsibility whatsoever for conflicts or incompatibilities arising from future changes to them. The product information on the Web Site or Materials is subject to change without notice. Do not finalize a design with this info. ARDUINO and other Arduino brands and logos are Trademarks of Arduino SA. All Arduino SA Trademarks cannot be used without owner's formal permission.
This project's hardware is licensed under the Creative Commons Attribution-ShareAlike 4.0 International License. To view a copy of this license, visit https://creativecommons.org/licenses/by-sa/4.0/deed.en

Title: QRB2210-PWR3
ID: ABX00162
Version:
Date: 01/05/2023 Time: 10:00:00
Sheet 13 of 24

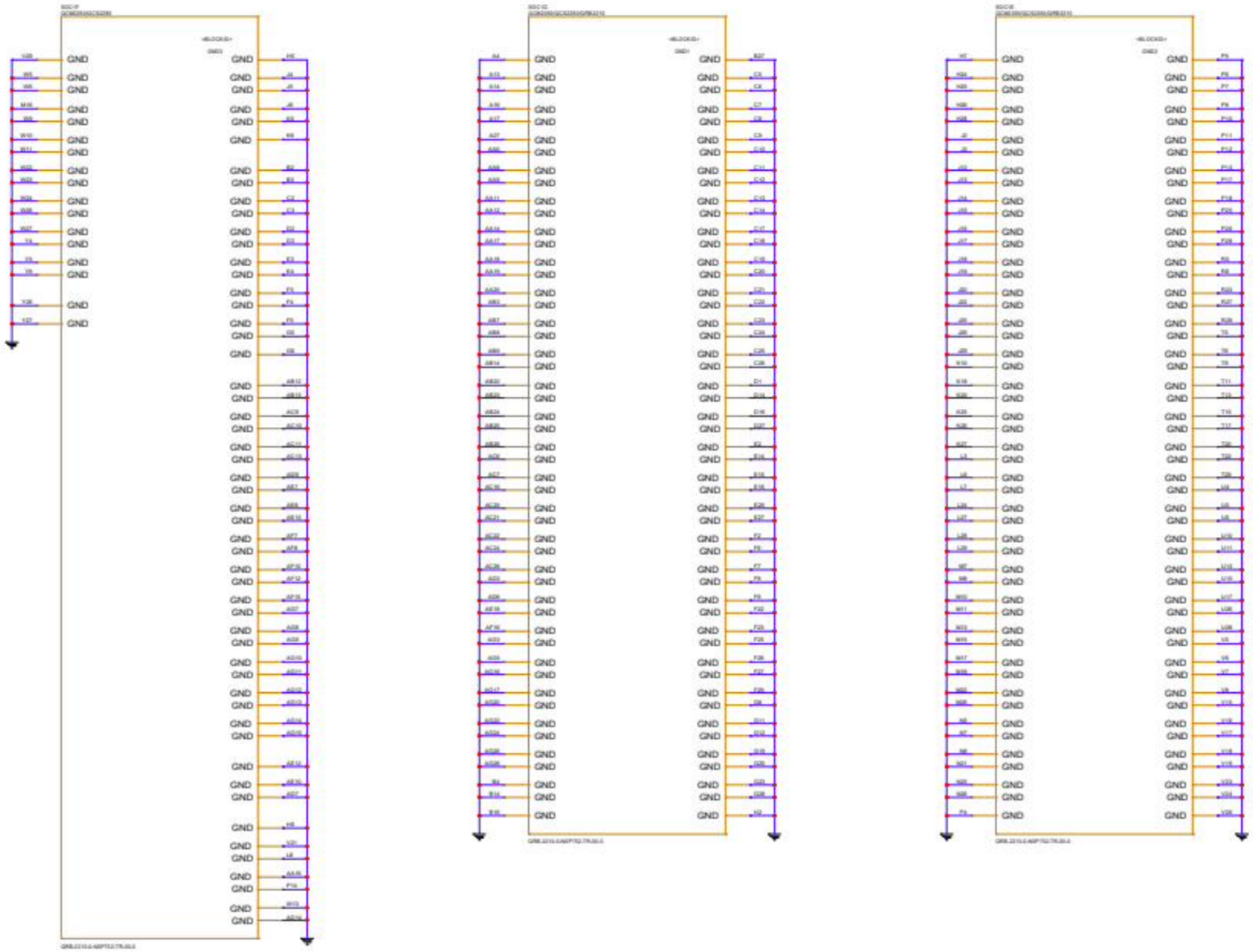

Reference Designs ARE PROVIDED "AS IS" AND "WITH ALL FAULTS". Arduino SA DISCLAIMS ALL OTHER WARRANTIES, EXPRESS OR IMPLIED, REGARDING PRODUCTS, INCLUDING BUT NOT LIMITED TO, ANY IMPLIED WARRANTIES OF MERCHANTABILITY OR FITNESS FOR A PARTICULAR PURPOSE. Arduino SA may make changes to specifications and product descriptions at any time, without notice. The Customer must not rely on the absence or characteristics of any features or instructions marked "reserved" or "undefined". Arduino SA reserves these for future definition and shall have no responsibility whatsoever for conflicts or incompatibilities arising from future changes to them. The product information on the Web Site or Materials is subject to change without notice. Do not finalize a design with this info. ARDUINO and other Arduino brands and logos are Trademarks of Arduino SA.
All Arduino SA Trademarks cannot be used without owner's formal permission.
This project's hardware is licensed under the Creative Commons Attribution-ShareAlike 4.0 International License. To view a copy of this license, visit https://creativecommons.org/licenses/by-sa/4.0/deed.en

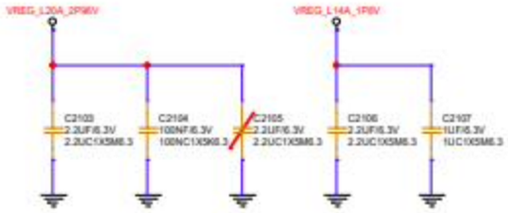

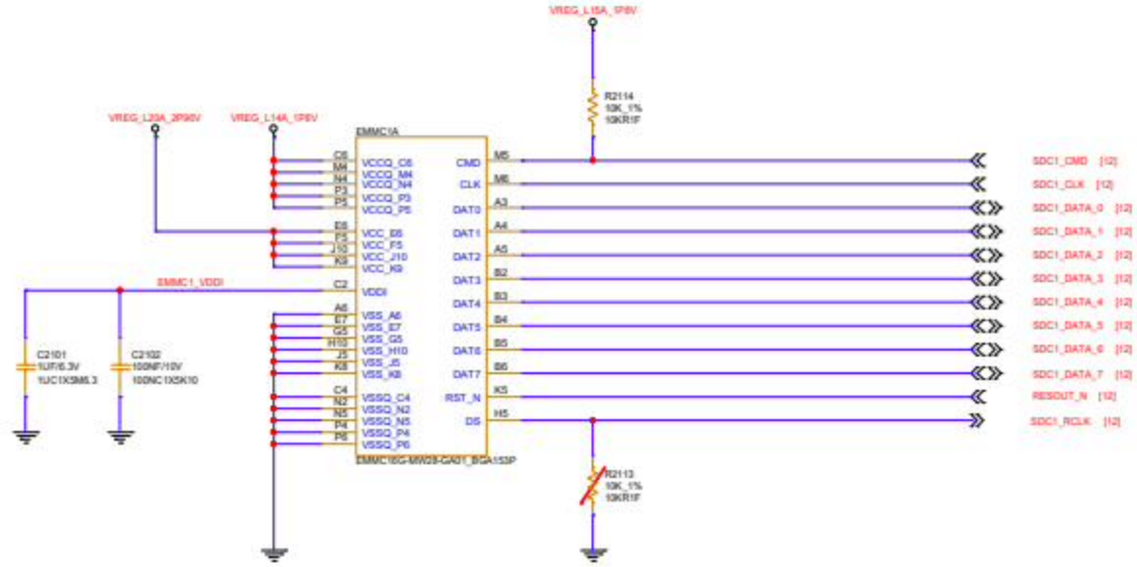

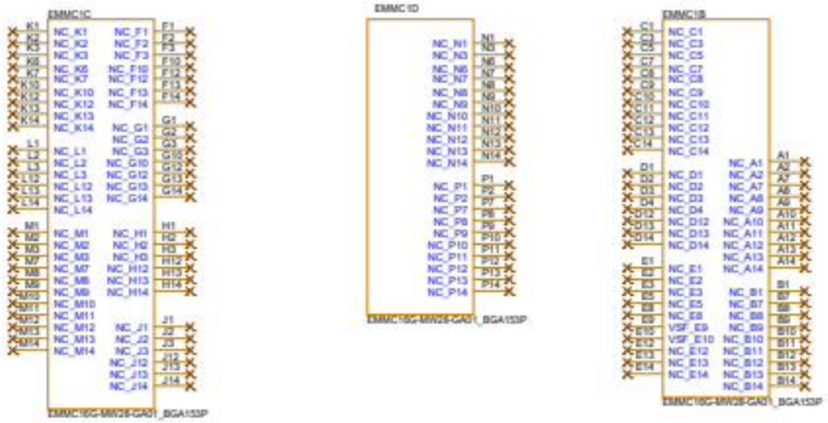

Reference Designs ARE PROVIDED "AS IS" AND "WITH ALL FAULTS". Arduino SA DISCLAIMS ALL OTHER WARRANTIES, EXPRESS OR IMPLIED, REGARDING PRODUCTS, INCLUDING BUT NOT LIMITED TO, ANY IMPLIED WARRANTIES OF MERCHANTABILITY OR FITNESS FOR A PARTICULAR PURPOSE. Arduino SA may make changes to specifications and product descriptions at any time, without notice. The Customer must not rely on the absence or characteristics of any features or instructions marked "reserved" or "undefined". Arduino SA reserves these for future definition and shall have no responsibility whatsoever for conflicts or incompatibilities arising from future changes to them. The product information on the Web Site or Materials is subject to change without notice. Do not finalize a design with this info. ARDUINO and other Arduino brands and logos are Trademarks of Arduino SA.
All Arduino SA Trademarks cannot be used without owner's formal permission.
This project's hardware is licensed under the Creative Commons Attribution-ShareAlike 4.0 International License. To view a copy of this license, visit https://creativecommons.org/licenses/by-sa/4.0/deed.en

Title: eMMC		
ID: ABX00162	Version:	
Date: 05/10/2023	Time: 13:00:00	Sheet 17 of 24

ARDUINO

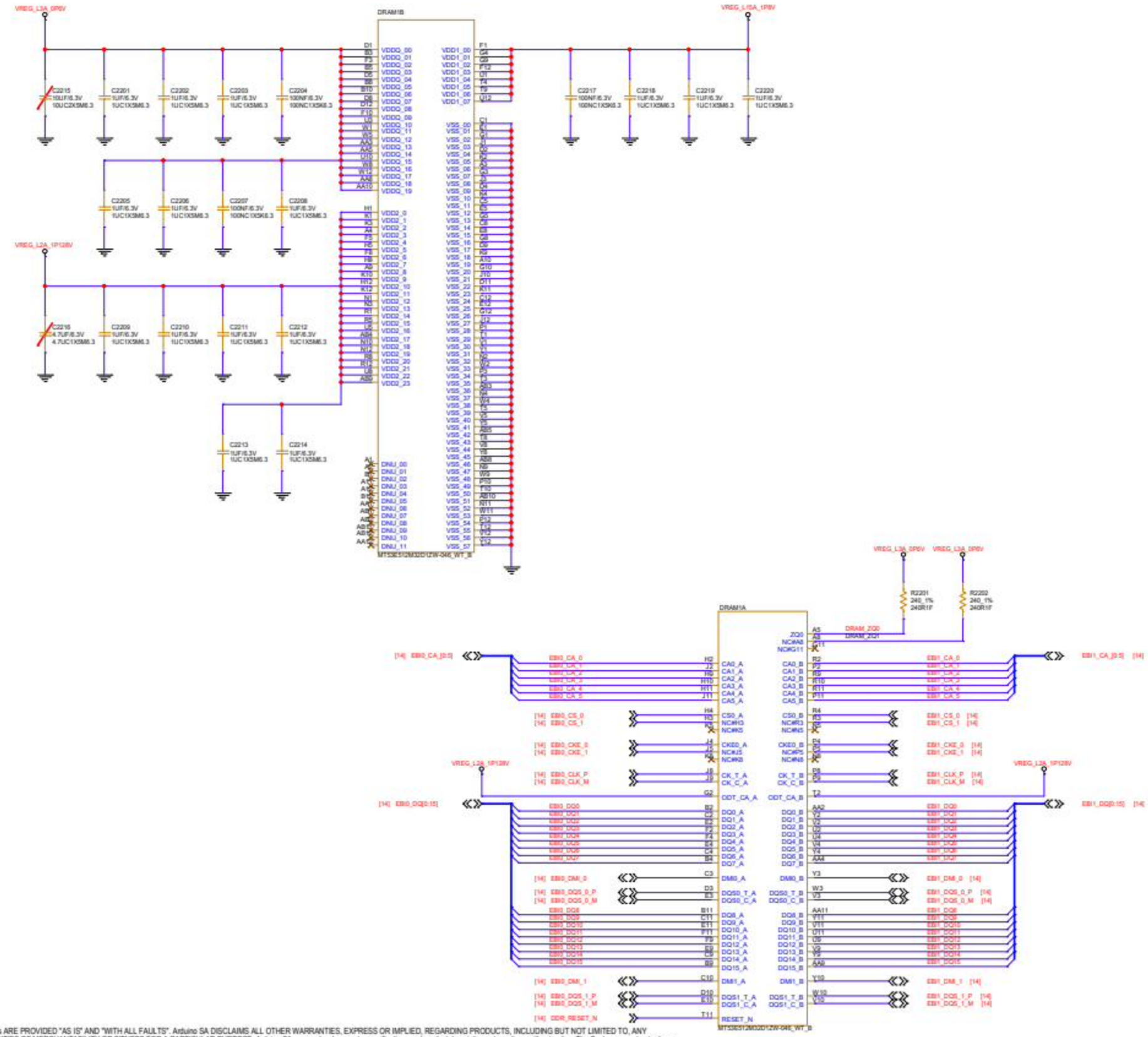

Reference Designs ARE PROVIDED "AS IS" AND "WITH ALL FAULTS". Arduino SA DISCLAIMS ALL OTHER WARRANTIES, EXPRESS OR IMPLIED, REGARDING PRODUCTS, INCLUDING BUT NOT LIMITED TO, ANY IMPLIED WARRANTIES OF MERCHANTABILITY OR FITNESS FOR A PARTICULAR PURPOSE. Arduino SA may make changes to specifications and product descriptions at any time, without notice. The Customer must not rely on the absence or characteristics of any features or instructions marked "reserved" or "undefined". Arduino SA reserves these for future definition and shall have no responsibility whatsoever for conflicts or incompatibilities arising from future changes to them. The product information on the Web Site or Materials is subject to change without notice. Do not finalize a design with this info. ARDUINO and other Arduino brands and logos are Trademarks of Arduino SA. All Arduino SA Trademarks cannot be used without owner's formal permission.
This project's hardware is licensed under the Creative Commons Attribution-ShareAlike 4.0 International License. To view a copy of this license, visit https://creativecommons.org/licenses/by-sa/4.0/deed.en

Title: LPDDR4X		
ID: ABX00162	Version:	
Date: 00/00/2023	Time: 13:00:00	Sheet 28 of 34

ARDUINO

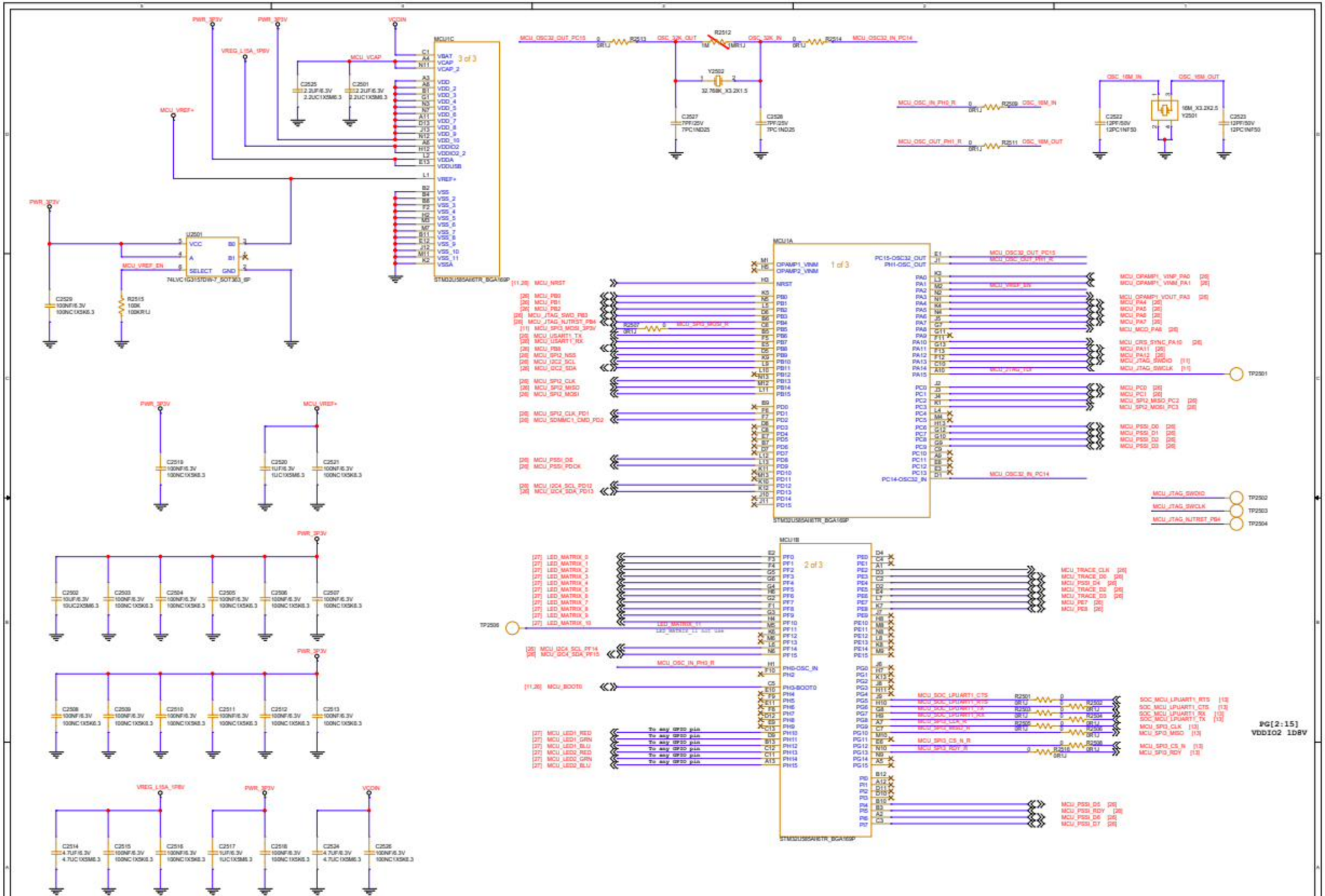

Reference Designs ARE PROVIDED "AS IS" AND "WITH ALL FAULTS". Arduino SA DISCLAIMS ALL OTHER WARRANTIES, EXPRESS OR IMPLIED, REGARDING PRODUCTS, INCLUDING BUT NOT LIMITED TO, ANY IMPLIED WARRANTIES OF MERCHANTABILITY OR FITNESS FOR A PARTICULAR PURPOSE. Arduino SA may make changes to specifications and product descriptions at any time, without notice. The Customer must not rely on the absence or characteristics of any features or instructions marked "reserved" or "undefined". Arduino SA reserves these for future definition and shall have no responsibility whatsoever for conflicts or incompatibilities arising from future changes to them. The product information on the Web Site or Materials is subject to change without notice. Do not finalize a design with this info. ARDUINO and other Arduino brands and logos are Trademarks of Arduino SA. All Arduino SA Trademarks cannot be used without owner's formal permission.
This project's hardware is licensed under the Creative Commons Attribution-ShareAlike 4.0 International License. To view a copy of this license, visit https://creativecommons.org/licenses/by-sa/4.0/deed.en

Title: MCU		
ID: ABX00162	Version:	
Date: 01/05/2023	Time: 12:00:00	Sheet 10 of 24

CC BY SA

ARDUINO

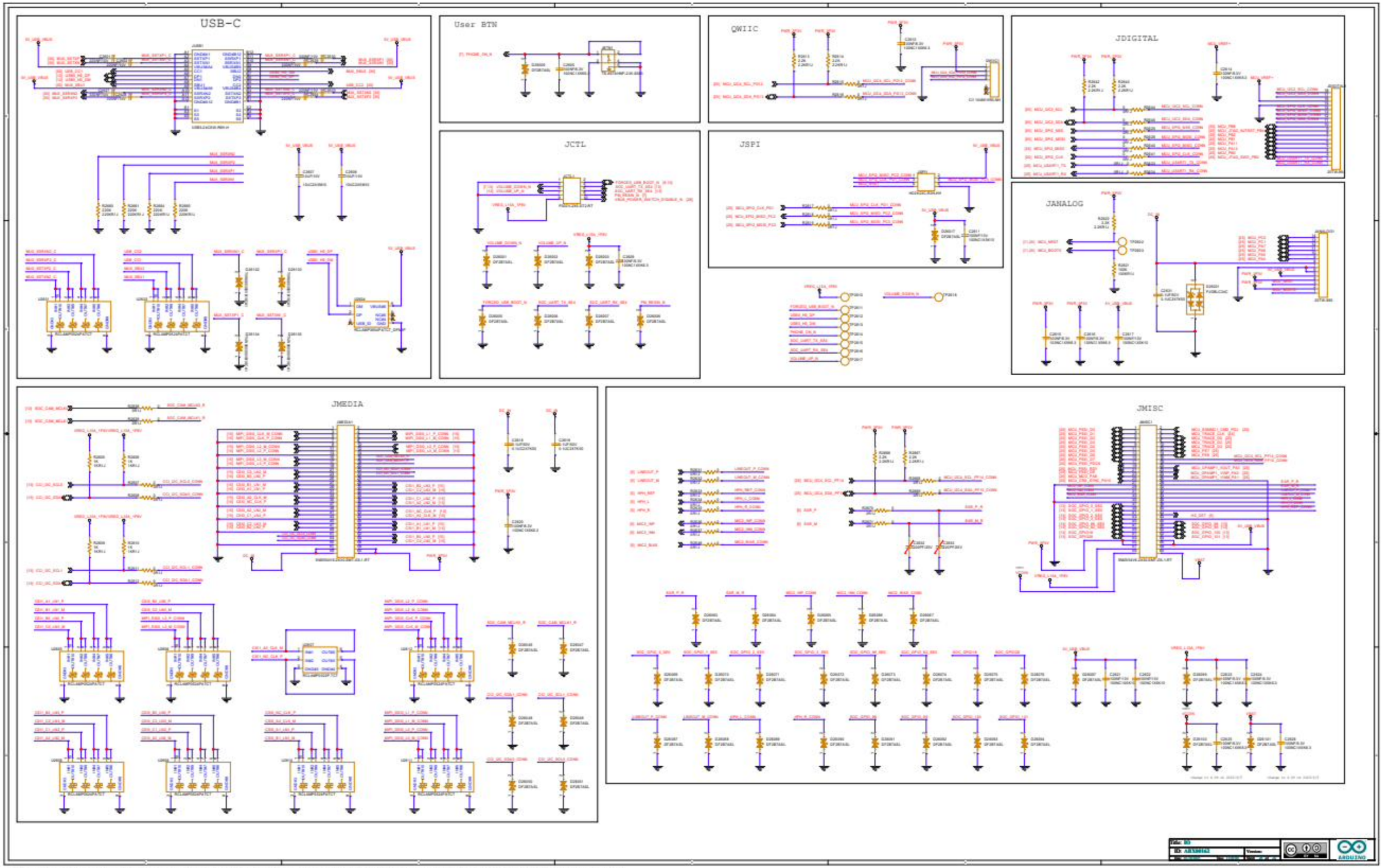

Reference Designs ARE PROVIDED "AS IS" AND "WITH ALL FAULTS". Arduino SA DISCLAIMS ALL OTHER WARRANTIES, EXPRESS OR IMPLIED, REGARDING PRODUCTS, INCLUDING BUT NOT LIMITED TO, ANY IMPLIED WARRANTIES OF MERCHANTABILITY OR FITNESS FOR A PARTICULAR PURPOSE. Arduino SA may make changes to specifications and product descriptions at any time, without notice. The Customer must not rely on the absence or characteristics of any features or instructions marked "reserved" or "undefined". Arduino SA reserves these for future definition and shall have no responsibility whatsoever for conflicts or incompatibilities arising from future changes to them. The product information on the Web Site or Materials is subject to change without notice. Do not finalize a design with this info. ARDUINO and other Arduino brands and logos are Trademarks of Arduino SA. All Arduino SA Trademarks cannot be used without owner's formal permission.
This project's hardware is licensed under the Creative Commons Attribution-ShareAlike 4.0 International License. To view a copy of this license, visit https://creativecommons.org/licenses/by-sa/4.0/deed.en

LED Matrix

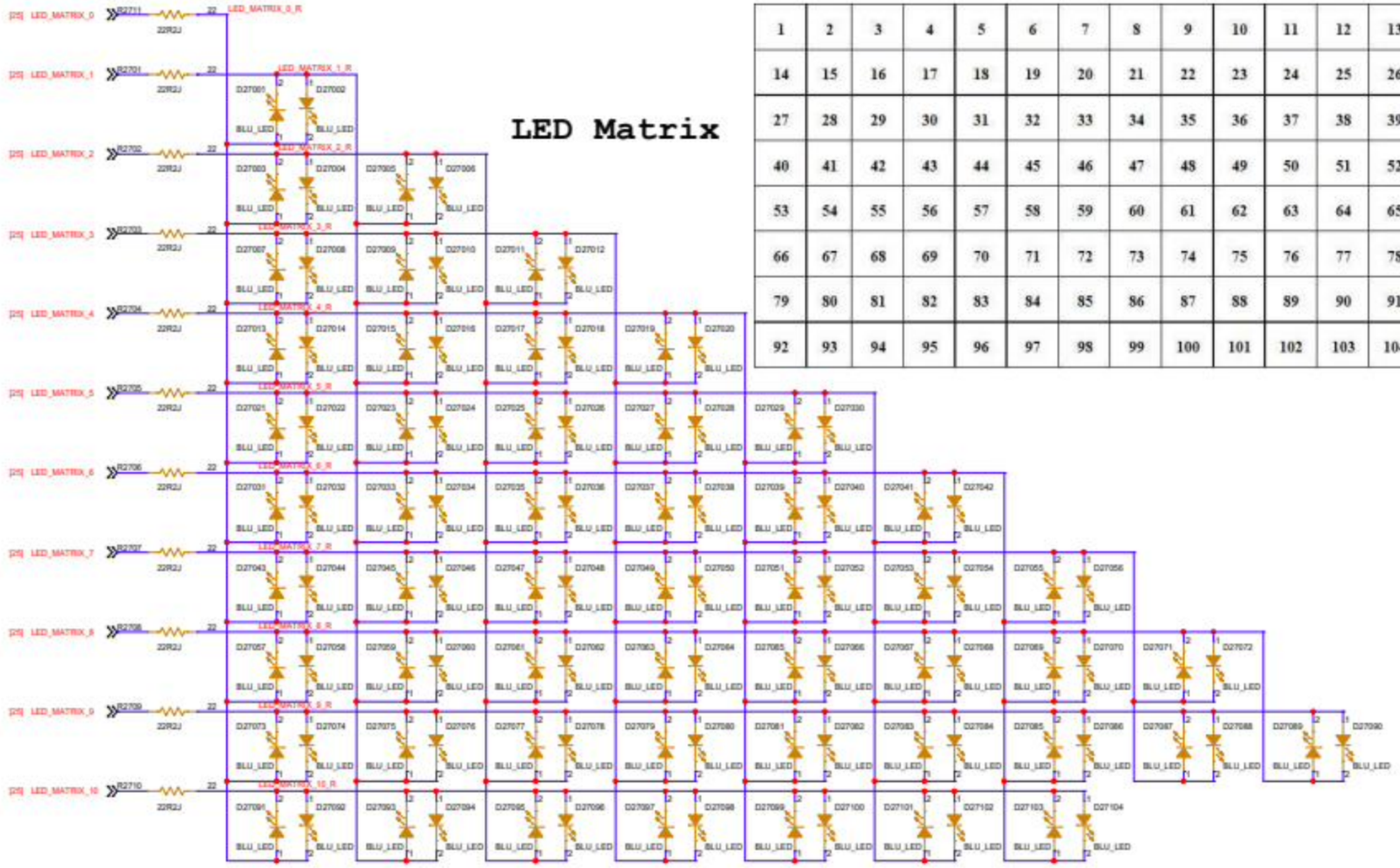

1	2	3	4	5	6	7	8	9	10	11	12	13
14	15	16	17	18	19	20	21	22	23	24	25	26
27	28	29	30	31	32	33	34	35	36	37	38	39
40	41	42	43	44	45	46	47	48	49	50	51	52
53	54	55	56	57	58	59	60	61	62	63	64	65
66	67	68	69	70	71	72	73	74	75	76	77	78
79	80	81	82	83	84	85	86	87	88	89	90	91
92	93	94	95	96	97	98	99	100	101	102	103	104

Power LED

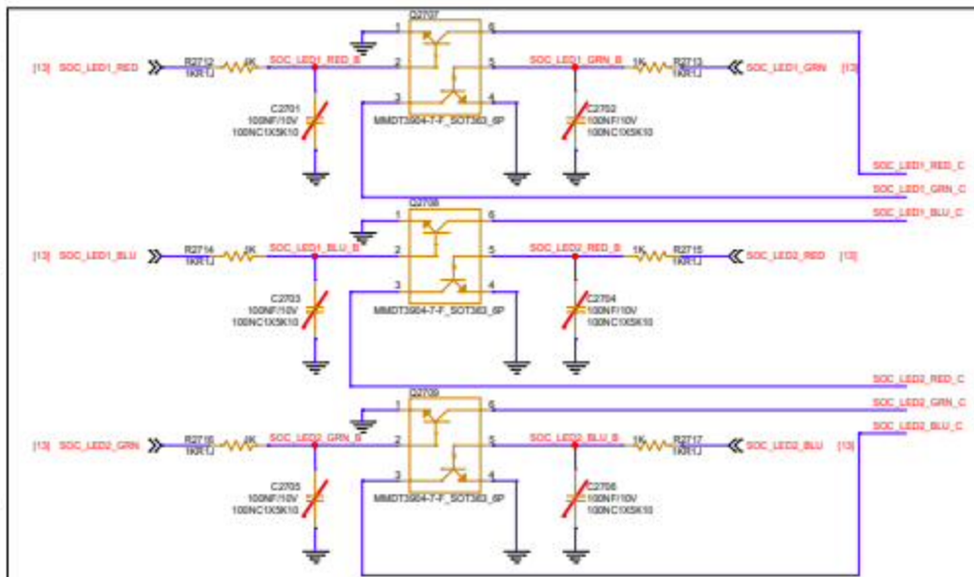

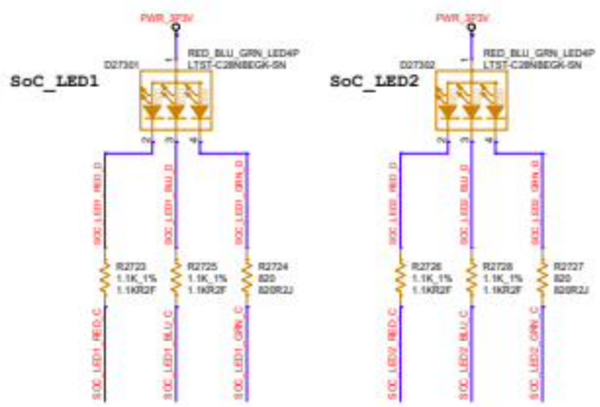

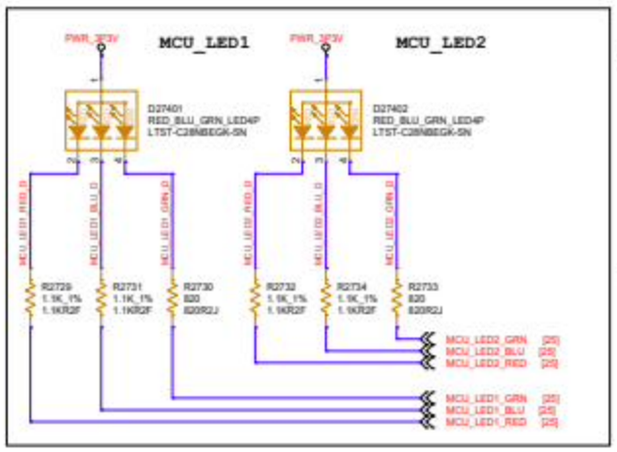

Reference Designs ARE PROVIDED "AS IS" AND "WITH ALL FAULTS". Arduino SA DISCLAIMS ALL OTHER WARRANTIES, EXPRESS OR IMPLIED, REGARDING PRODUCTS, INCLUDING BUT NOT LIMITED TO, ANY IMPLIED WARRANTIES OF MERCHANTABILITY OR FITNESS FOR A PARTICULAR PURPOSE. Arduino SA may make changes to specifications and product descriptions at any time, without notice. The Customer must not rely on the absence or characteristics of any features or instructions marked "reserved" or "undefined". Arduino SA reserves these for future definition and shall have no responsibility whatsoever for conflicts or incompatibilities arising from future changes to them. The product information on the Web Site or Materials is subject to change without notice. Do not finalize a design with this info. ARDUINO and other Arduino brands and logos are Trademarks of Arduino SA. All Arduino SA Trademarks cannot be used without owner's formal permission.
This project's hardware is licensed under the Creative Commons Attribution-ShareAlike 4.0 International License. To view a copy of this license, visit https://creativecommons.org/licenses/by-sa/4.0/deed.en

Title: LED
ID: ABX00162
Version:
Date: 01/01/2020 Time: 12:00:00
Sheet 21 of 24

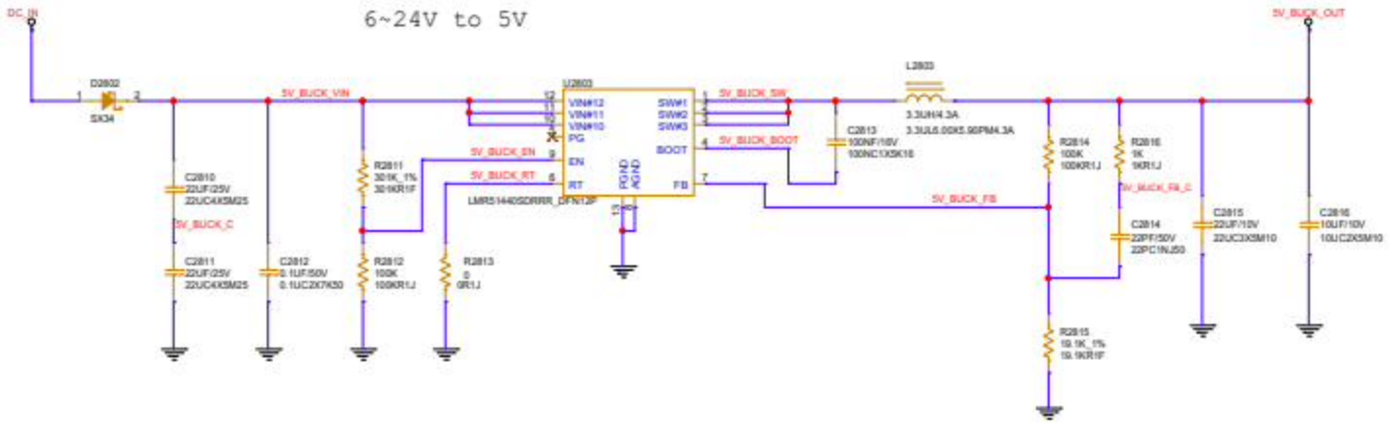

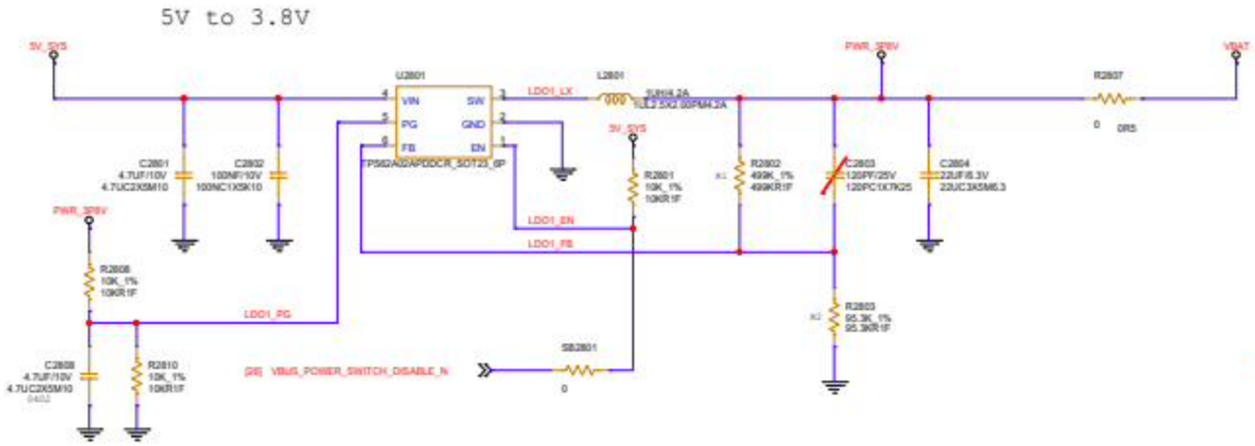

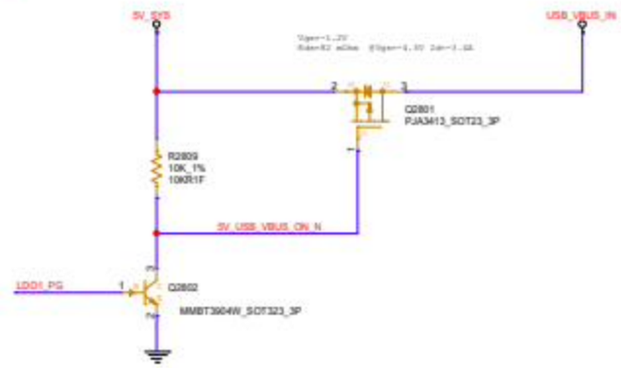

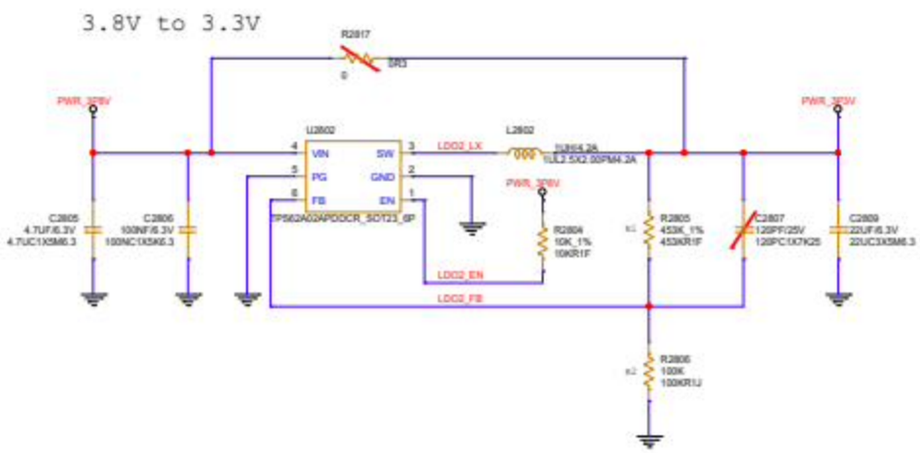

Reference Designs ARE PROVIDED "AS IS" AND "WITH ALL FAULTS". Arduino SA DISCLAIMS ALL OTHER WARRANTIES, EXPRESS OR IMPLIED, REGARDING PRODUCTS, INCLUDING BUT NOT LIMITED TO, ANY IMPLIED WARRANTIES OF MERCHANTABILITY OR FITNESS FOR A PARTICULAR PURPOSE. Arduino SA may make changes to specifications and product descriptions at any time, without notice. The Customer must not rely on the absence or characteristics of any features or instructions marked "reserved" or "undefined". Arduino SA reserves these for future definition and shall have no responsibility whatsoever for conflicts or incompatibilities arising from future changes to them. The product information on the Web Site or Materials is subject to change without notice. Do not finalize a design with this info. ARDUINO and other Arduino brands and logos are Trademarks of Arduino SA. All Arduino SA Trademarks cannot be used without owner's formal permission.
This project's hardware is licensed under the Creative Commons Attribution-ShareAlike 4.0 International License. To view a copy of this license, visit https://creativecommons.org/licenses/by-sa/4.0/deed.en

Title: DC / DC		
ID: ABX00162	Version:	
Date: 05/05/2023 Time: 13:00:00	Sheet: 22 of 28	

ARDUINO

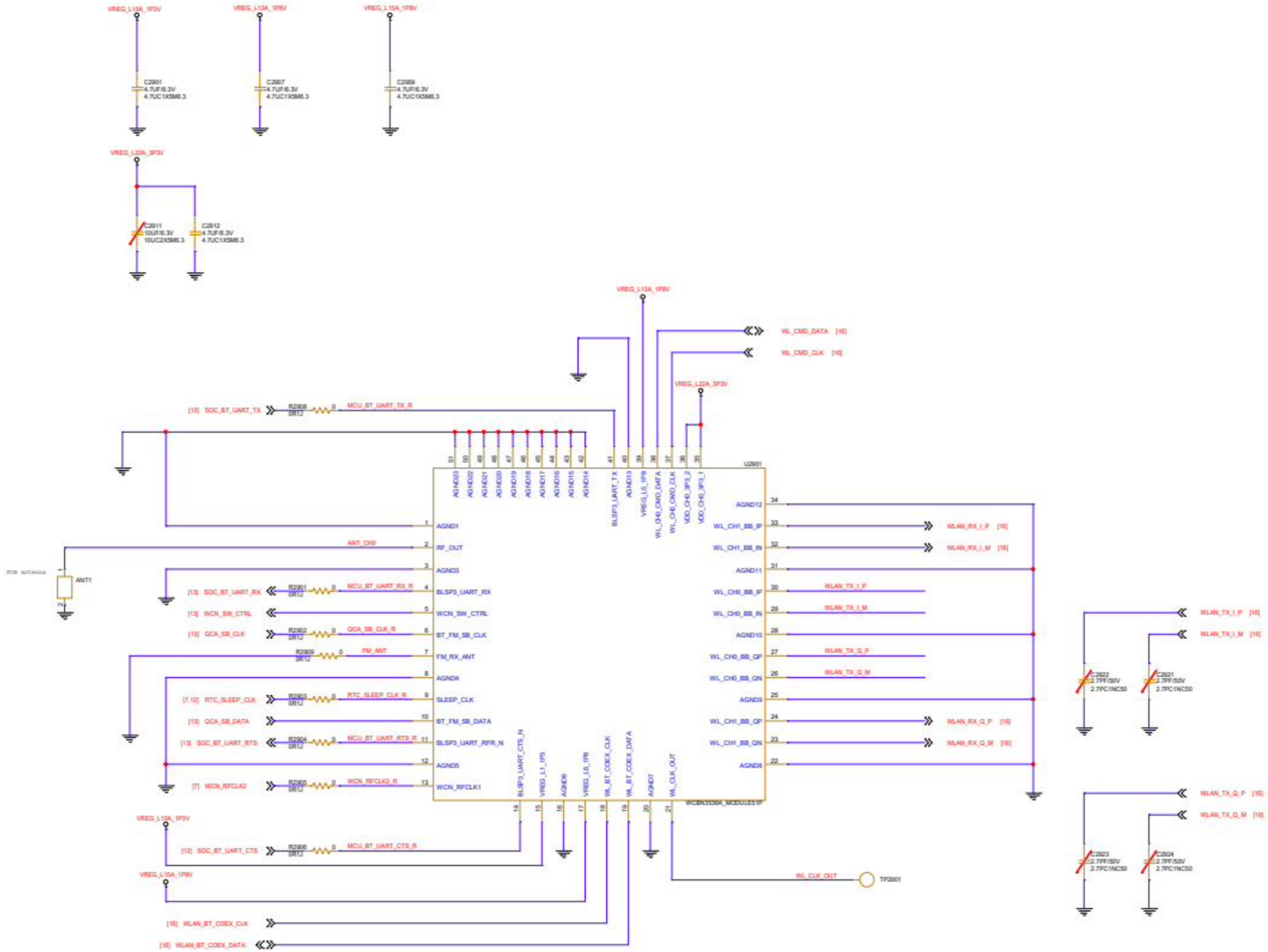

Reference Designs ARE PROVIDED "AS IS" AND "WITH ALL FAULTS". Arduino SA DISCLAIMS ALL OTHER WARRANTIES, EXPRESS OR IMPLIED, REGARDING PRODUCTS, INCLUDING BUT NOT LIMITED TO, ANY IMPLIED WARRANTIES OF MERCHANTABILITY OR FITNESS FOR A PARTICULAR PURPOSE. Arduino SA may make changes to specifications and product descriptions at any time, without notice. The Customer must not rely on the absence or characteristics of any features or instructions marked "reserved" or "undefined". Arduino SA reserves these for future definition and shall have no responsibility whatsoever for conflicts or incompatibilities arising from future changes to them. The product information on the Web Site or Materials is subject to change without notice. Do not finalize a design with this info. ARDUINO and other Arduino brands and logos are Trademarks of Arduino SA.
All Arduino SA Trademarks cannot be used without owner's formal permission.
This project's hardware is licensed under the Creative Commons Attribution-ShareAlike 4.0 International License. To view a copy of this license, visit https://creativecommons.org/licenses/by-sa/4.0/deed.en

Title: RF & WiFi Module
ID: ABX00162
Version:
Date: 01/10/2023 Time: 13:00:00 Sheet 20 of 24

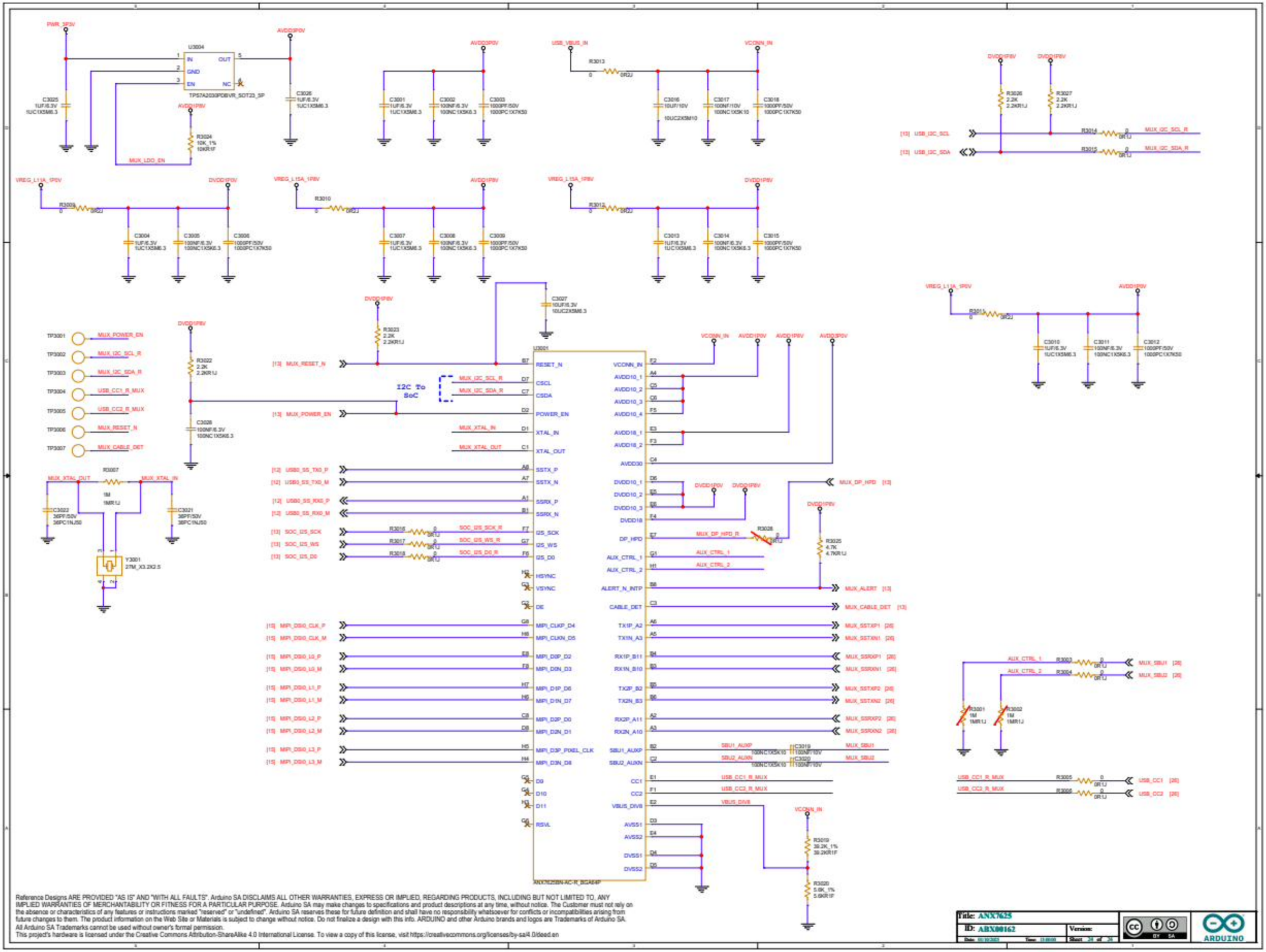

Reference Designs ARE PROVIDED "AS IS" AND "WITH ALL FAULTS". Arduino SA DISCLAIMS ALL OTHER WARRANTIES, EXPRESS OR IMPLIED, REGARDING PRODUCTS, INCLUDING BUT NOT LIMITED TO, ANY IMPLIED WARRANTIES OF MERCHANTABILITY OR FITNESS FOR A PARTICULAR PURPOSE. Arduino SA may make changes to specifications and product descriptions at any time, without notice. The Customer must not rely on the absence or characteristics of any features or instructions marked "reserved" or "undefined". Arduino SA reserves these for future definition and shall have no responsibility whatsoever for conflicts or incompatibilities arising from future changes to them. The product information on the Web Site or Materials is subject to change without notice. Do not finalize a design with this info. ARDUINO and other Arduino brands and logos are Trademarks of Arduino SA. All Arduino SA Trademarks cannot be used without owner's formal permission.
This project's hardware is licensed under the Creative Commons Attribution-ShareAlike 4.0 International License. To view a copy of this license, visit https://creativecommons.org/licenses/by-sa/4.0/deed.en

Title: ANX7625
ID: ABX00162
Version:
Date: 00/00/2023 Time: 12:00:00 Sheet 24 of 26

This project's hardware is licensed under the Creative Commons Attribution-ShareAlike 4.0 International License. To view a copy of this license, visit https://creativecommons.org/licenses/by-sa/4.0/deed.en