Design and Analysis of Hybrid Transmission Gate–MTCMOS 4:1 Multiplexer for Low-Power Nanoscale Circuits

***Abstract*—In electronic chip design, the Multiplexer (MUX) is an important electronic element with vast applications. The 4:1 MUX using Transmission Gate logic (TGL) has major issues with high power consumption and high latency. To address high power consumption and latency, this work introduced a new hybrid approach for the design of a 4:1 MUX using TGL. The design incorporates a hybrid approach, with two 2:1 MUXs designed with traditional TGL and a third 2:1 MUX designed with TGL and Hybrid MTCMOS-TG Power Gating for low-power design. This hybrid approach reduces the power consumption by 19.83% compared to the traditional 4:1 MUX usign TGL and reduces the propagation delay by 14.24%. The proposed hybrid architecture offers improved efficiency and power-handling capacity, making it suitable for ultra-low-power applications in digital circuit design.**

***Index Terms*—Multiplexer, MTCMOS, Transmission Gate Logic, Power Gating, Low Power Design, Propagation Delay**

I. Introduction

In the modern world of electronics, the growth of VLSI industry was predicted decades before of the revolution. The modern age demands both portability and speed. From smartphones to every other electronic device, portability is demanded. That's why VLSI design trends have shifted to the nanometre and even smaller ranges nowadays. As the industry has shifted to deep-submicron levels, especially the 90nm CMOS technology node, maintaining low power and low latency has become mandatory. While scaling increases the transistor count in an IC and enables faster switching, it significantly worsens leakage current [1]. In battery-driven devices, even a small amount of "idle" power consumption can drastically reduce overall system performance. The Multiplexer (MUX) is a fundamental block of digital electronic system. It has a very vast area of application which includes data routing, signal processing, memory addressing, logic building and many more. Among various logic styles for MUX design, Transmission Gate (TG) logic is often preferred because it reduces the transistor count [2]. However, at the 90-nm scale, traditional TG-based 4:1 MUX architectures suffer from significant static power dissipation because they lack an inherent mechanism to disconnect from the power rails during standby modes [3]. Researchers have recently focused on optimizing these structures to balance the trade-off between propagation delay and power dissipation, often referred to as PDP (Power-Delay Product) [4]. To address these issues, power gating techniques are introduced. The multi-threshold CMOS (MTCMOS) power-gating technique is one of them. It is a useful strategy in which high-threshold-voltage V_{th} transistors are used as "sleep" switches to isolate the low-threshold logic from the supply voltage during inactivity [5]. Recent studies show that architectures where both low threshold and high-threshold voltage V_{th} transistors can achieve superior control over leakage without speed penalties and massive transistor counts [6] [7]. These designs, which result in lower power consumption, can be incorporated into the MUX design. By applying these techniques at specific stages of a binary-tree MUX, both of the standby and active power can be optimized [8].

This paper proposes a Hybrid-MTCMOS Transmission Gate 4:1 MUX design in which the first two MUXs are implemented with traditional Transmission Gate Logic, and the third MUX uses the same logic with power gating. The 4:1 MUX's structure makes it a hybrid design. We aim to provide a design that maintains high-speed data transfer while significantly reducing energy waste at negligible cost in transistor count. Our work specifically targets reducing PDP and ultimately provides a more efficient solution for high-density digital circuits.

The structure of this paper is as follows: Section II presents the proposed design architecture. Section III outlines the simulation outputs and results. Section IV concludes the paper by summarizing the findings and contributions with future work, outlining the plans for extended applications.

II. Proposed Design Architecture

This paper presents a hybrid-MTCMOS 4:1 MUX that integrates power-gating into TGL at the 90 nm node. The design effectively minimizes power consumption and Power-Delay Product (PDP) while maintaining high-speed performance.

A. The Basic 2:1 TG MUX

In [9], the 2:1 multiplexer (MUX) is implemented using two TGs and one inverter to generate $\overline{S}$. Each transmission gate (TG) is designed as a parallel combination of an NMOS and a PMOS transistor, allowing it to pass both strong logic '0' and strong logic '1'. The upper TG connects the input D_0 to the output Y, and the lower TG connects D_1 to Y. The select signal S directly controls one TG and, through the inverter, it controls the other with $\overline{S}$. This operation ensures that only one TG is ON at a time. When $S = 0$, the upper TG turns ON and connects D_0 to Y, and the lower TG remains OFF. When $S = 1$, the lower TG turns ON and connects D_1 to Y, and the upper TG remains OFF. Therefore, the circuit realizes

the function $Y = \overline{S}D_0 + SD_1$. This design is area-efficient because it requires only two TGs (four transistors) and one inverter (two transistors). This TG implementation is shown in Fig. 1.

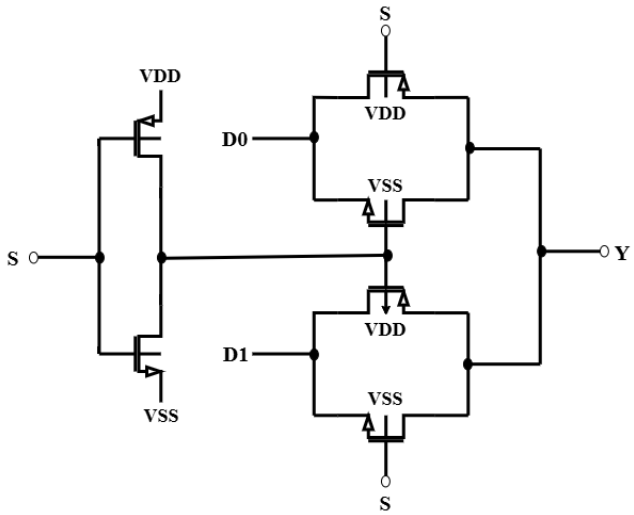

Fig. 1: 2:1 MUX Implemented Using TGL

B. MTCMOS Power Gating Technique

As shown in Fig. 2, the implementation relies on strategically using transistors with varying threshold voltages to decouple performance from power consumption. By using high-threshold transistors as power switches, sub-threshold leakage current, one of the primary concerns in 90 nm technology, is significantly reduced.

1. Header Configuration (High-Threshold PMOS): In this study (see Fig. 2), the MTCMOS structure is implemented using a header-switch architecture. A high-threshold PMOS (H-PMOS) transistor is connected between the main supply rail (V_{DD}) and an internal virtual supply rail (VV_{DD}) [10].

Function: The H-PMOS acts as a sleep controller for the entire logic block shown in Fig. 2. During the active mode, the header transistor turns on. When it enters sleep mode, it is turned off, effectively reducing unnecessary power dissipation [11].

Leakage Control: Since this transistor has a higher threshold voltage than the switching transistors used in the transmission gates, it provides much higher resistance to sub-threshold leakage when turned off, effectively gating the power supply to the MUX structure [12].

2. Active vs. Sleep Operational Modes: As illustrated in Fig. 2, the circuit operation is governed by the sleep control signal (denoted as S in the schematic), which is applied to the gate of the H-PMOS transistor.

Active Mode: When the control signal is low (logic '0'), the high-threshold PMOS turns fully ON. This connects V_{DD} to VV_{DD}, allowing the 2:1 MUX composed of the D_0 and D_1 transmission gate paths to operate normally. In this condition, the circuit achieves high-speed performance by using low-threshold transistors in the logic block to enable fast signal propagation to the output Y.

Sleep Mode: When the control signal is high (logic '1'), the high-threshold PMOS enters the cut-off region. This disconnects VV_{DD} from the main V_{DD} supply. As a result, the virtual supply rail effectively floats, significantly reducing static power dissipation in the transmission gates during idle periods.

Therefore, referring to Fig. 2, the incorporation of this power-gating mechanism ensures that high-speed switching is maintained during active computation while leakage power is substantially suppressed during standby operation, which is especially critical in 90 nm technology. The MOSFET specifications that are used in the proposed design in 90 nm technology is given in Table I.

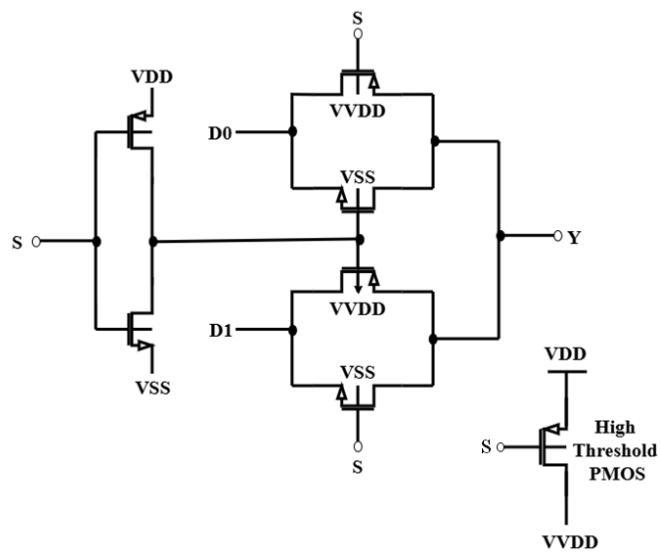

Fig. 2: MTCMOS-Based 2:1 TG MUX with High-V_{th} PMOS Header Switch

C. Proposed Hybrid 4:1 MUX Architecture

The main structure of the proposed design, shown in Fig. 3, follows a simple hierarchical arrangement. Rather than applying power gating to the entire circuit, the proposed structure uses a hybrid approach to reduce leakage.

1. Stage-Specific Logic Partitioning

As seen in Fig. 3, the 4:1 MUX is divided into two stages based on their roles.

Primary Selection Stage: The first stage consists of two normal 2:1 transmission gate (TG) MUX blocks. These blocks take the four inputs (D_0 to D_3) and are controlled by the select line S_0. We intentionally used conventional TG logic here to keep the delay low and the layout compact. This stage focuses mainly on fast switching.

Power-Gated Output Stage: The outputs from the first stage are then connected to a single MT-CMOS-based 2:1 MUX. This block acts as the final selection stage and controls the

TABLE I: MOSFET Device Parameters

MOSFET Type	Length (L) (nm)	Width (W) (nm)	Threshold Voltage
PMOS	100	120	Normal
NMOS	100	120	Normal
PMOS (Control Switch)	100	120	High (HVT)

overall output Y. Instead of adding sleep transistors to every block, power gating was implemented only at this final stage in our design. In this way, we can control leakage along the entire output path without increasing unnecessary area in earlier stages.

2. Integration of MTCMOS

The MTCMOS technique is applied only in the final stage, as highlighted in Fig. 3. In this stage, a high-threshold PMOS header transistor is used to control the virtual supply rail (VV_{DD}) shown in Fig. 2. During active operation, the virtual rail is connected to V_{DD}, and the circuit works normally. During standby, the header transistor turns OFF, disconnecting the supply and reducing leakage. Because this gating is placed at the output stage, leakage from the first-stage TG blocks is prevented from propagating to the final output node.

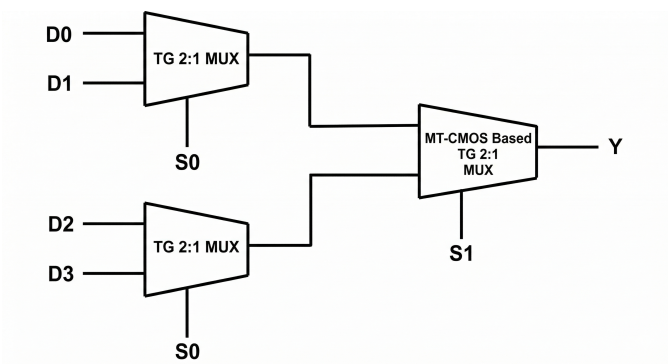

Fig. 3: Proposed Hybrid 4:1 Multiplexer Architecture Incorporating MTCMOS-Based Final Stage

III. Simulation Outputs and Results

To evaluate the performance of the proposed hybrid architecture, we conducted simulations in Cadence Virtuoso using a 90 nm technology with a supply voltage of $V_{DD} = 1.2\,\text{V}$. The main parameters we focused on were average power consumption, propagation delay and the Power-Delay Product (PDP).

A. Functional Verification (Waveform Analysis)

We started our evaluation by thoroughly validating the basic logic functionality of the suggested 4:1 MUX for all its possible input configurations by closely observing the shown transient simulation waveforms in Fig. 4. Note that if we follow along for the example in Fig. 44, it is clear that the final output $VOUT$ matches the selected imported data (D_0-D_3) accurately and consistently. The routing is entirely determined by the logic states on the selection lines S_0 and S_1. To present

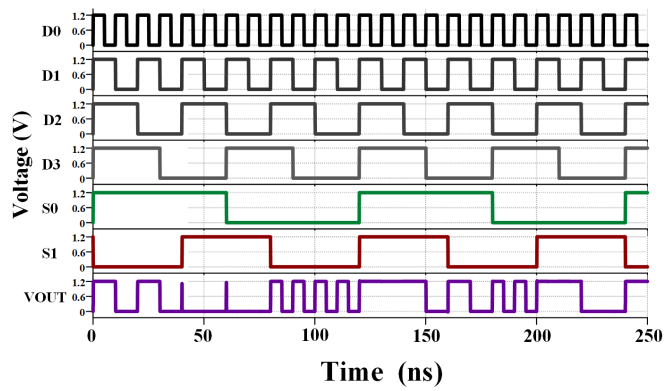

Fig. 4: Timing Diagram Showing Functional verification of the 4:1 MUX across all selection states ($S_0S_1 = 00$ to 11)

this selection mechanism more explicitly and in a structured manner, the theoretical functional states have been summarized in Table II. Looking into the plots, we can confirm that the output levels exactly match the theoretical outputs as expected by this truth table. This flawless match between theoretical logic and physical simulation results successfully confirms the use of advanced, correct logic for the switch dynamic condition in our proposed design.

TABLE II: Truth Table of the 4:1 MUX

Select Lines (S_1S_0)	Output (V_{OUT})
00	D_0
01	D_2
10	D_1
11	D_3

B. Power Consumption Analysis

The use of a High-V_{th} PMOS transistor in the final stage helps in reducing sub-threshold leakage current. In a conventional TG MUX, static power keeps flowing even when the circuit is not actively switching. In our design, the power-gating mechanism reduces this unwanted leakage. Table III shows the power consumption of the proposed design and the standard TGL design of a 4:1 MUX. From the first group of bars in the Power Comparison plot in Fig. 5, it can be observed that the average power consumption decreases from 168.9 nW in the standard TG implementation to 135.4 nW in the proposed design. This corresponds to a reduction of approximately 19.83%. The improvement mainly comes from the inclusion of a high-threshold header transistor in the MTCMOS configuration, which effectively minimizes sub-threshold leakage during standby operation.

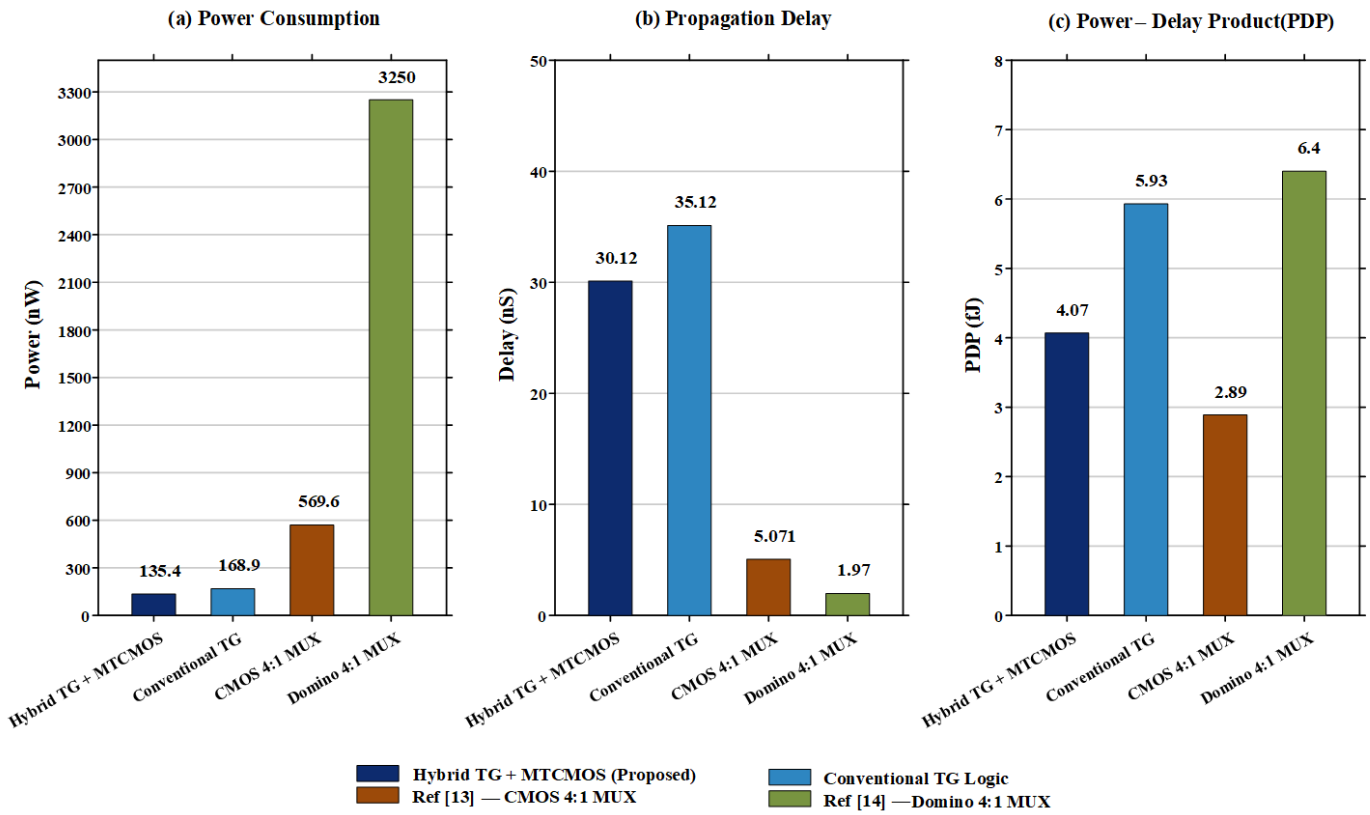

Fig. 5: Comparative Analysis of Power Consumption, Propagation Delay and PDP Between Reference Designs and the Proposed Architecture.

C. Delay and PDP Evaluation

Another important achievement of this work is that the hybrid structure did not increase delay. In fact, the propagation delay has improved by a standard margin. Table III shows that the delay reduced from 35.12 ns to 30.12 ns in the proposed design from the conventional one, which corresponds to a 14.23% improvement. The bar group labeled Propagation Delay in Fig. 5 helps visualize this improvement.

The Power-Delay Product (PDP) is used to measure overall energy efficiency and is calculated as:

$$PDP = \text{Power} \times \text{Delay}$$

Since both average power and propagation delay decrease simultaneously, the proposed circuit avoids the typical speed degradation often associated with power-gating techniques. As a result, the PDP shows a substantial improvement. As the Table III shows, the overall energy efficiency enhancement of 31.36% is achieved compared to the standard TG MUX. Lastly the comparison is visualized using Fig. 5. In the proposed architecture, the MTCMOS technique is applied to the final 2:1 MUX stage, rather than to every sub-block. This design choice avoids adding multiple high-threshold sleep transistors throughout the circuit. The technique of adding only one device avoids the area complexity. As a result, the overall transistor count increases by only one device and this selective implementation influences the performance mentioned. The overall evaluation demonstrates that the proposed design maintains a reliable performance–power trade-off.

D. Comparative Performance Table

The overall comparison between the conventional and proposed design is summarized below:

To verify the effectiveness of the hybrid MTCMOS architecture proposed in this paper, a detailed comparison has been added here with previously reported 4:1 multiplexer designs implemented in a similar way in 90 nm technology and with a supply voltage V_{DD} of 1.2 V. The results of this comparison are presented in Table III.

The proposed design is evaluated by comparing it with different logic styles, including conventional Transmission Gate (TG), standard CMOS [13], and dynamic logic-based implementation [14]. For a meaningful assessment, key performance parameters such as average power consumption, propagation delay and PDP are compared. These metrics provide a clear understanding of the trade-offs between power efficiency and speed across the design's different architectures.

E. Visualizing the Results

Fig. 5 shows a comparison of 4:1 multiplexer designs at 90 nm technology. The grouped bar chart compares the

TABLE III: Performance Comparison with Existing 90 nm Literatures

Design / Ref	Logic Style	V_{DD} (V)	Power (nW)	Delay (nS)	PDP (fJ)
This Work	**Hybrid TG + MTCMOS**	**1.2**	**135.4**	**30.12**	**4.07**
This Work	Conventional TGL 4:1 MUX	1.2	168.9	35.12	5.93
Ref [13]	CMOS 4:1 MUX	1	569.6	5.071	2.89
Ref [14]	Dynamic Logic Based Domino 4:1 MUX	1	3250	1.97	6.40

proposed hybrid TG-MTCMOS design with the conventional TG implementation and other designs in the literature.

As this paper highlights the design advantage of the proposed architecture, we focus on only comparing the results of the standard TG logic 4:1 MUX design and our proposed architecture. Both designs were created and simulated using Cadence Virtuoso. This reduces the complexity of this section and meets the overall goal of our work, which is to establish the achievement of a low-power TG Logic 4:1 MUX implementation.

Overall, the results shown in Fig. 5 demonstrate that integrating MTCMOS with the hybrid 4:1 multiplexer structure is an effective approach for achieving low-power and high-performance operation in nanoscale CMOS technologies. This makes the design suitable for compact and battery-driven electronic systems.

IV. Conclusion

In this work, we proposed a hybrid 4:1 Multiplexer (MUX) design that combines conventional Transmission Gate (TG) logic with Multi-Threshold CMOS (MTCMOS) to tackle leakage power issues in nanoscale circuits. By applying power gating only at the final selection stage, the design reduces static power consumption without incurring the large-area increase or delay penalties typically seen in fully gated architectures. Though the transistor count increases by one, the result is more efficient. From simulations based on 90 nm CMOS technology, the results show that the proposed MUX achieves an average power consumption of 135.4 nW, which is around 19.83% lower than the standard TG implementation. A propagation delay of 30.12 nS, giving a 14.23% improvement in speed. A Power-Delay Product (PDP) gain of 31.36%, indicating a clear boost in overall energy efficiency. These results confirm that the hybrid structure effectively balances power saving and performance. The proposed MUX is a strong candidate for low-power, high-speed digital designs, especially in battery-operated and IoT systems where energy efficiency is critical. In the future, this hybrid MTCMOS concept can be extended to higher-order MUX such as 8:1, 16:1, or 32:1, and its behavior can be tested under different thermal conditions. Different process variations can also be used for checking the reliability of the hybrid MTCMOS concept.

References

[1] T. Sivasakthi, D. S, and N. S, "Power analysis of cmos family using 90 45 nanometers," in *2025 International Conference on Computing and Communication Technologies (ICCCT)*, pp. 1–6, 2025.

[2] L. Rai, P. Kumar, N. Gupta, and R. Gupta, "Performance analysis of low power multiplexer for communication system," in *2023 IEEE Devices for Integrated Circuit (DevIC)*, pp. 17–21, IEEE, 2023.

[3] S. Singh, L. K. Dabi, A. Kumar, and M. Kumar, "Design and comparative analysis of cmos and various adiabatic logic circuits of 8: 1 multiplexer," in *NIELIT's International Conference on Communication, Electronics and Digital Technologies*, pp. 13–29, Springer, 2025.

[4] S. Kumar, A. Kumar, and D. K. Jhariya, "Design of multiplexer in 90nm technology using energy recovery logic circuit," in *Advances in AI for Biomedical Instrumentation, Electronics and Computing*, pp. 416–421, CRC Press, 2024.

[5] R. N. Wuerdig, "Low power design of cmos time to digital converters," 2022.

[6] B. Aiswarya, Y. S. Kumar, C. B. N. Jyothi, S. Sahoo, and A. K. Samantaray, "Designing of robust, energy efficient hybrid approach for implementing a 1-bit adder," in *2024 2nd International Conference on Networking, Embedded and Wireless Systems (ICNEWS)*, pp. 1–6, IEEE, 2024.

[7] N. Mahendran, M. Harshini, S. Arthi, K. Bhavadharani, and R. Booma, "Development of low power energy efficient 32nm sram utilizing sleep transistor technology," in *2024 10th International Conference on Advanced Computing and Communication Systems (ICACCS)*, vol. 1, pp. 1001–1007, IEEE, 2024.

[8] K. J. Padala, K. K. Kamarajugadda, and P. Movva, "Performance enhancement of digital circuits through cmos, gdi-based area and power optimization in 90nm technology," *J Appl Bioanalysis*, vol. 11, no. S4, pp. 305–18, 2025.

[9] S. Awasthi, D. C. Upadhyay, M. Suresh, A. Beohar, and M. R. Tripathy, "Comparative study of various 4x1 mux using different logic families," in *2025 IEEE 6th India Council International Subsections Conference (INDISCON)*, pp. 1–6, 2025.

[10] J. J. Johannah, R. Korah, M. Kalavathy, and Sivanandham, "Standby and dynamic power minimization using enhanced hybrid power gating structure for deep-submicron cmos vlsi," *Microelectronics Journal*, vol. 62, pp. 137–145, 2017.

[11] L. Zhou, R. Parameswaran, F. A. Parsan, S. C. Smith, and J. Di, "Multi-threshold null convention logic (mtncl): An ultra-low power asynchronous circuit design methodology," *Journal of Low Power Electronics and Applications*, vol. 5, no. 2, pp. 81–100, 2015.

[12] R. Rastogi, S. Pandey, and M. Gupta, "Low leakage optimization techniques for multi-threshold cmos circuits," *Nanoscience & Nanotechnology-Asia*, vol. 10, no. 5, pp. 696–708, 2020.

[13] M. A. Ahmed, Y. Thakur, R. Ravita, and N. Kashyap, "A comparative analysis of 4: 1 multiplexer design using 2: 1 multiplexers in terms of delay and power," in *2025 International Conference on Electronics, AI and Computing (EAIC)*, pp. 1–5, IEEE, 2025.

[14] S. R. Ghimiray and P. K. Dutta, "Strength-varying keeper based 4: 1 mux for low-leakage and low jitter at 500 mhz clock," in *2018 International Conference on Computing, Power and Communication Technologies (GUCON)*, pp. 997–1002, IEEE, 2018.