Magnetic Susceptibility vs Temperature

Mahipal kumawat
B22267

April 25, 2025

1. Objective

To study the variation of magnetic susceptibility (χ) with temperature for a paramagnetic sample (Gd_2O_3) and verify Curie's Law.

2. Instruments

- Gd_2O_3 **(Gadolinium Oxide) Sample**: Paramagnetic material used for the susceptibility experiment.
- **Sample Holder / Sample Rod**: Device that securely holds the sample and allows positioning within the cryostat or coil region.
- **Cryostat**: Provides a controlled low-temperature environment, often using liquid nitrogen, to facilitate temperature-dependent measurements.
- **Coil System**: A pair of coaxially wound primary (magnetizing) and secondary (search) coils used for generating and detecting magnetic fields.
- **Computer System**: Controls sample movement, cryostat temperature, and handles data acquisition automatically.
- **Mutual Inductance Bridge**: Measures changes in inductance corresponding to variations in the sample's magnetic susceptibility.
- **Lock-in Amplifier**: Amplifies and filters weak induced voltage signals in phase with the reference AC frequency for precise measurement.

3. Working Principle / Theory

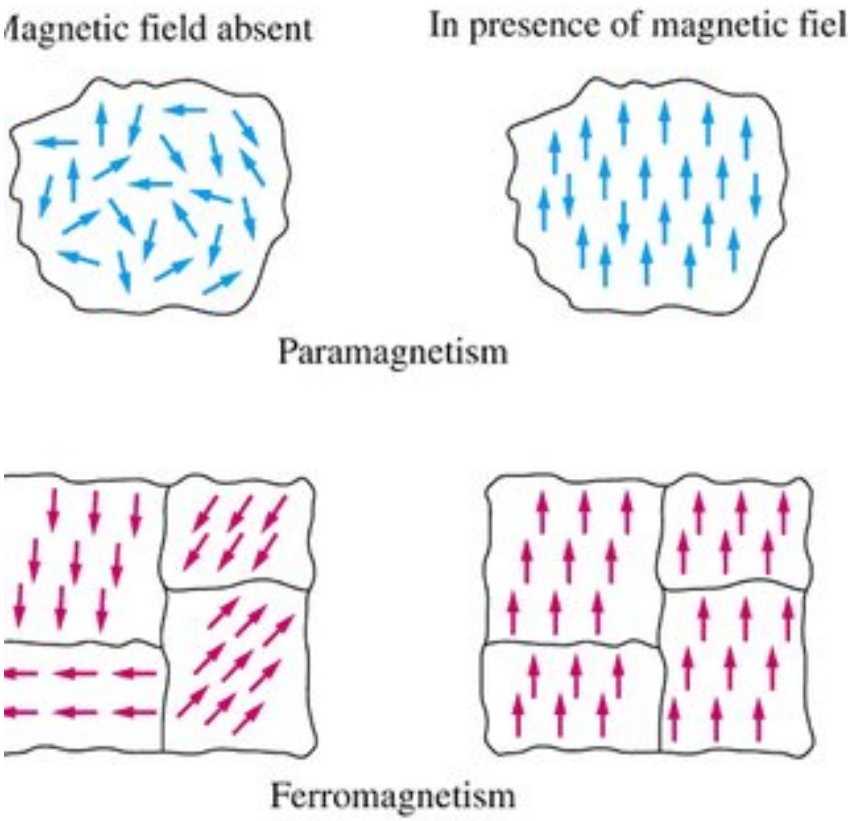

Magnetic susceptibility (χ) is a dimensionless parameter that quantifies the extent to which a material becomes magnetized in response to an applied magnetic field. For paramagnetic substances, the susceptibility is governed by **Curie's Law**, which is given by:

$$\chi = \frac{C}{T}$$

where:

- C is the Curie constant, characteristic of the material, depending on the magnetic moment and number density of magnetic atoms or ions.
- T is the absolute temperature measured in Kelvin.

In a paramagnetic material, atoms or ions possess permanent magnetic moments due to the presence of unpaired electrons. These moments are randomly oriented at thermal equilibrium, resulting in no net magnetization in the absence of an external magnetic field.

When a magnetic field is applied, it tends to align these magnetic moments along the direction of the field. However, this alignment is counteracted by thermal motion, which works to randomize the orientations. As the temperature increases, thermal agitation becomes more significant, making it harder for the magnetic moments to align with the field, hence reducing the net magnetization and, consequently, the magnetic susceptibility.

Gadolinium oxide (Gd_2O_3) is a paramagnetic substance that contains Gd^{3+} ions. Each Gd^{3+} ion has seven unpaired electrons in the 4f shell, leading to a large magnetic moment. These unpaired electrons are well shielded by outer shells and thus interact weakly with the crystal field, retaining strong paramagnetic properties over a wide temperature range.

Curie's Law – Qualitative Understanding

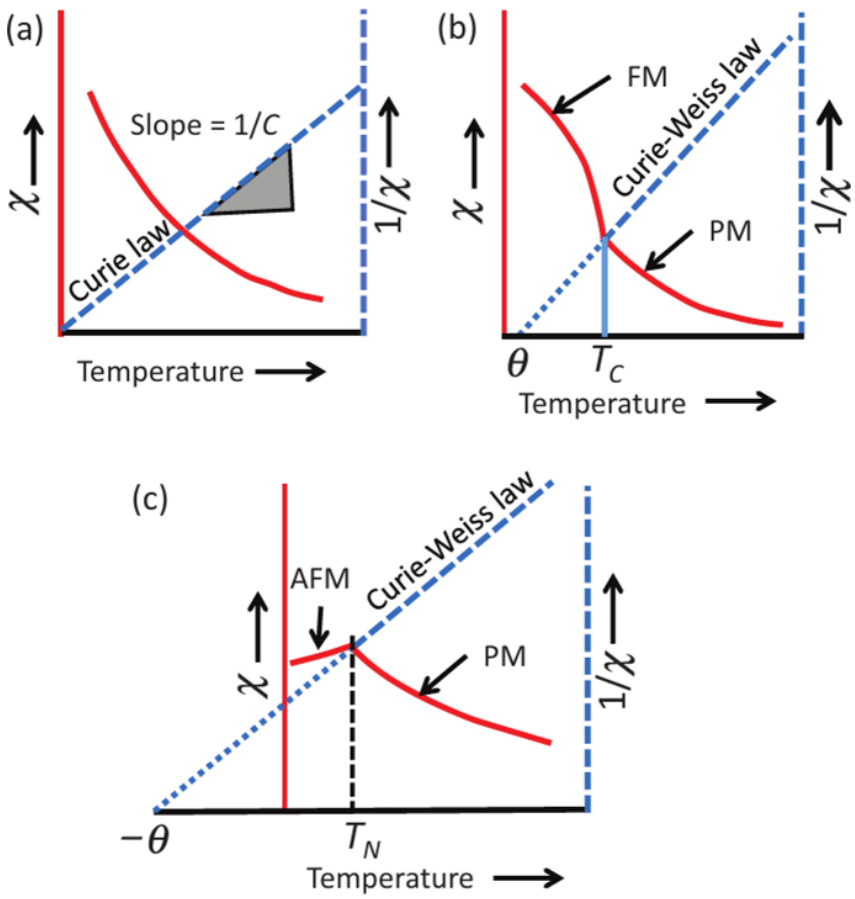

The magnetization M of a paramagnetic material is linearly related to the applied magnetic field H:

$$M = \chi H$$

Substituting Curie's Law:

$$M = \frac{C}{T} H$$

This relation shows that the magnetization decreases with increasing temperature for a constant magnetic field. A graph of χ versus $1/T$ should yield a straight line, thus experimentally validating Curie's Law.

The theoretical basis of Curie's Law stems from statistical mechanics and the Boltzmann distribution, where the magnetic energy levels split in a magnetic field and the population difference between them leads to net magnetization. The degree of this population difference is inversely proportional to temperature.

Magnetic Susceptibility and Induced Voltage

In experimental setups involving coils, such as mutual inductance or search coil arrangements, the presence of the magnetized sample alters the magnetic flux, inducing a voltage that can be measured. The induced voltage V is proportional to the rate of change of magnetization:

$$V \propto \frac{dM}{dt} \propto \chi \frac{dH}{dt}$$

For an AC magnetic field (oscillating H), dH/dt is constant, so the induced voltage becomes directly proportional to the susceptibility χ. As temperature changes, the magnetization response of the sample changes accordingly, and so does the induced voltage.

Therefore, by monitoring the voltage across the detection coil as the temperature of the sample varies, one can infer the temperature dependence of magnetic susceptibility and compare it with Curie's Law.

Significance of Gd_2O_3

Gadolinium oxide is widely used in susceptibility experiments because:

- It exhibits strong paramagnetism due to Gd^{3+} ions.
- Its magnetic moments are largely unaffected by the lattice due to shielding by outer electrons.
- It follows Curie's Law over a wide temperature range, making it ideal for experimental verification.

Experimental Procedure

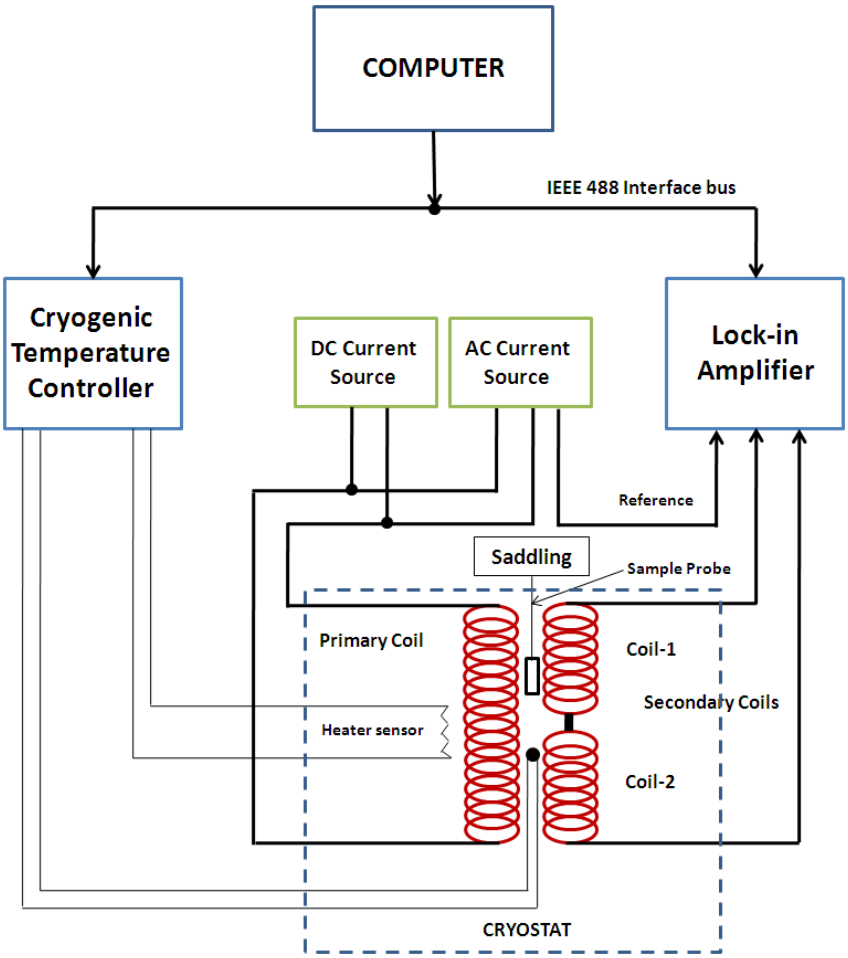

Cryostat Setup and Sample Cooling

1. Place the Gd_2O_3 **sample** inside the **cryostat**, ensuring it is positioned inside both the **primary (magnetizing) coil** and **secondary (search) coil**.

2. Set the cryostat to the desired starting temperature and ensure temperature control for cooling with **liquid nitrogen**.

Primary Coil (Magnetizing Coil)

1. Connect the **primary coil** to the **AC power supply** to generate a time-varying magnetic field.

2. Adjust the frequency of the AC signal as required.

Secondary Coil (Search Coil)

1. Ensure the **secondary coil** is aligned coaxially with the primary coil.

2. Connect the secondary coil to the **PC setup** for voltage measurement.

Induced Voltage Measurement

1. Begin cooling the Gd_2O_3 **sample** using the **cryostat** and **liquid nitrogen**.
2. Turn on the AC power supply to the primary coil, generating an oscillating magnetic field.
3. Measure the induced voltage across the **secondary coil** using the **PC setup**.

Data Recording and Analysis

1. The **PC setup** automatically measures and records the magnetic susceptibility at different temperatures by adjusting the cryostat temperature (cooling and warming the sample).

4. Observations / Results

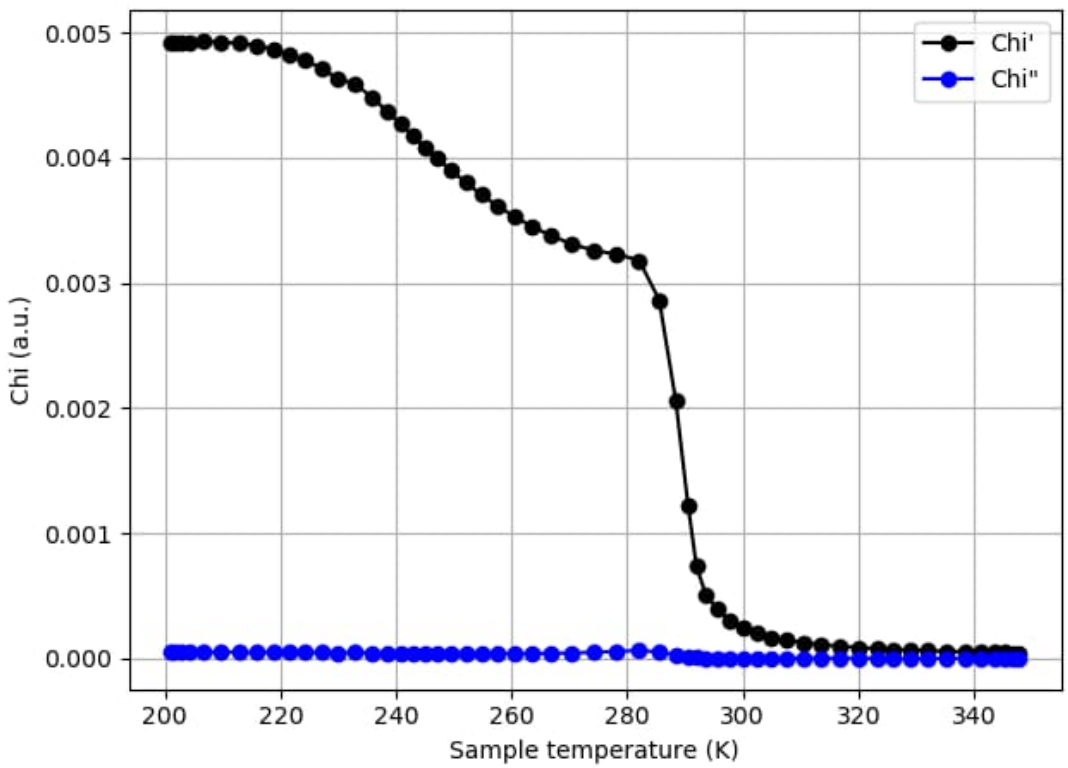

- The real part of magnetic susceptibility (χ') is relatively high at lower temperatures (200–270 K), indicating strong magnetic response.
- As temperature increases, χ' gradually decreases and shows a steep decline between 280–310 K, suggesting a magnetic phase transition (e.g., from ferromagnetic to paramagnetic).

- Above 310 K, χ' becomes nearly constant and low, indicating a paramagnetic or non-magnetic behavior at high temperatures.
- The imaginary part (χ'') stays close to zero across the entire temperature range, showing negligible energy loss, which implies minimal hysteresis or eddy current effects in the sample.
- The smoothness and sharpness of the χ' curve suggest a well-defined magnetic transition temperature.

1 Precautions

- Ensure proper thermal contact between the sample and the temperature sensor.
- Avoid sudden temperature changes to protect the sample and equipment.
- Calibrate the gauss meter and voltmeter before starting the experiment.
- Ensure the sample is properly centered in the magnetic field.

2 Learnings

- Understood the concept of paramagnetism and Curie's Law.
- Gained experience in using electromagnetic setups and temperature controllers.
- Learned how magnetic properties vary with thermal energy.
- Developed skills in data analysis and graph interpretation.

3 Conclusion

The magnetic susceptibility of Gd_2O_3 was found to decrease with increasing temperature. The inverse relationship between susceptibility and temperature confirms Curie's Law, validating the paramagnetic behavior of the sample.