S1000M/S1400M/S1800M ICE MACHINES
SELF CONTAINED 460/60/3 PHASE
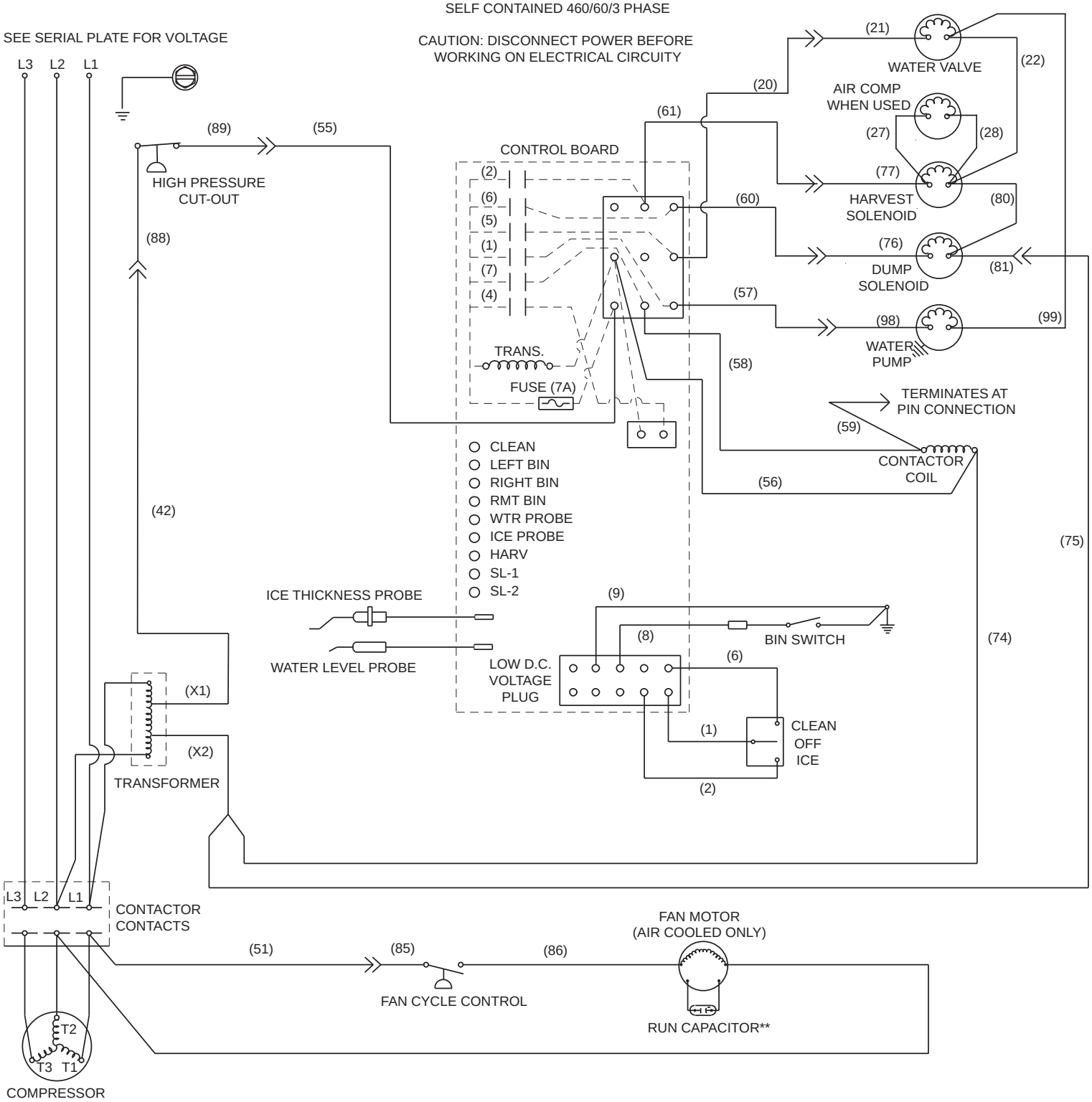
CAUTION: DISCONNECT POWER BEFORE
WORKING ON ELECTRICAL CIRCUITY