Outlet, Body, Command unit	Command unit	1
	Body	2
	Outlet	3
Water circuit, Chassis	Chassis	4
	Water circuit	5
Mechanical module	Mechanical module	6
	Mill	7
	Fixed piston	8
	Drive block	9
	Brew chamber with piston	10
	Bean storage container	11
Hydraulic module	Hydraulic module	12
	Coffee boiler	13
	Solenoid valve block	14
	Flowmeter with valve	15
Power	Powermanagement module	16
Tea-steam module	Tea-steam module	17
	Tea-steam boiler	18
Foamer module	Foamer module	19
	Heating container	20
	Brew module	21
	Various	22
	Choko	23
	Accessories	24
	Milk Replenishment Unit	25
	Coin changer	26
		27
		28
		29
		30
		31

1. Command unit

			Page	Revision	
				List	Drawing
Command unit	CT	B&W	1.1.1 / 1.1.2	REV.4	REV.4
Command unit	CT	flat	1.2.1 / 1.2.2	REV.4	REV.4
Command unit	CT/CTM/CTS	undercounter	1.3.1 / 1.3.2	REV.4	REV.4
Command unit	CTM / CTS	kantig	1.4.1 / 1.4.2	REV.4	REV.4
Command unit	CTM / CTS	flat	1.5.1 / 1.5.2	REV.4	REV.4
Command unit	CTMF5-T	B&W	1.6.1 / 1.6.2	REV.4	REV.4
Command unit	CB	B&W	1.7.1 / 1.7.2	REV.4	REV.4
Command unit	CT / CTM/ CTS / CTMS	easyline	1.8.1 / 1.8.2	REV.4	REV.4

Part No	Description	Quantity
72.10.22	**Command module CT - B&W, assembly**	**1**
04.04.00	Nut M4	9
10.16.00	Main switch with lens, red	1
71.10.35	Latch left hand	1
71.10.36	Latch guide left hand	1
71.10.42	Top cover support	1
71.10.54	Support card reader	1
71.10.78	Latch guide right hand	1
71.10.79	Latch right hand	1
71.11.06	Command module CT - B&W	1
71.30.32	Key cylinder	1
71.30.60	Flat cable 26p.	1
71.30.67	Program key	1
71.30.68	Card reader	1
71.30.78	Faston 45°	1
71.30.92	Wiring harness main switch CT	1
71.40.29	Spring ø D4.4x27	2
71.50.11	Oval head screw M3x8	3
71.50.27	Washer M4	8
71.50.49	Knurled nut M4	2
72.10.38	**CPU deck CT, assembly**	**1**
04.03.00	Nut M3	2
71.11.24	Deck support plate CT	1
71.30.16	CPU-Deck	1
71.30.36	Deck support piece	4
71.30.52	Motor resistor 24VDC	1
71.30.69	EPROM*	1
71.50.49	Knurled nut M4	4
72.10.63	**Keyboard CT, assembly**	**1**
71.12.26	Keyboard foil CT, Version 2	1
72.10.48	**Keyboard support CT, assembly**	**1**
04.03.00	Nut M3	4
71.12.28	Keyboard support CT Version 2	1
71.33.07	Display without Poti	1
71.31.39	Touch button CT - K6 V99	2
71.50.00	Oval head screw M3x6	4
71.50.47	Countersunk screw	2
71.50.53	Spacer keyboard	4
72.11.50	**Cup support to command module CT, assembly**	**1**
71.30.93	Heating element CT - B&W forward	1
71.40.81	**Plastiglas hedging CT - B&W**	**1**
71.41.15	Profile to frame	2
71.41.16	Sidewall for plastiglas hedging B&W	2
71.41.20	Backwall for plastiglas hedging CT	1
72.10.74	**Command module CT extern B&W, assembly**	**1**
72.10.65	**Keyboard CT extern, assembly**	**1**
71.12.27	Keyboard foil CT extern (TS/Choko)	1
72.10.68	**Keyboard support CT extern, assembly**	**1**
71.12.29	Keyboard support CT extern (TS/Choko)	1
71.31.38		1

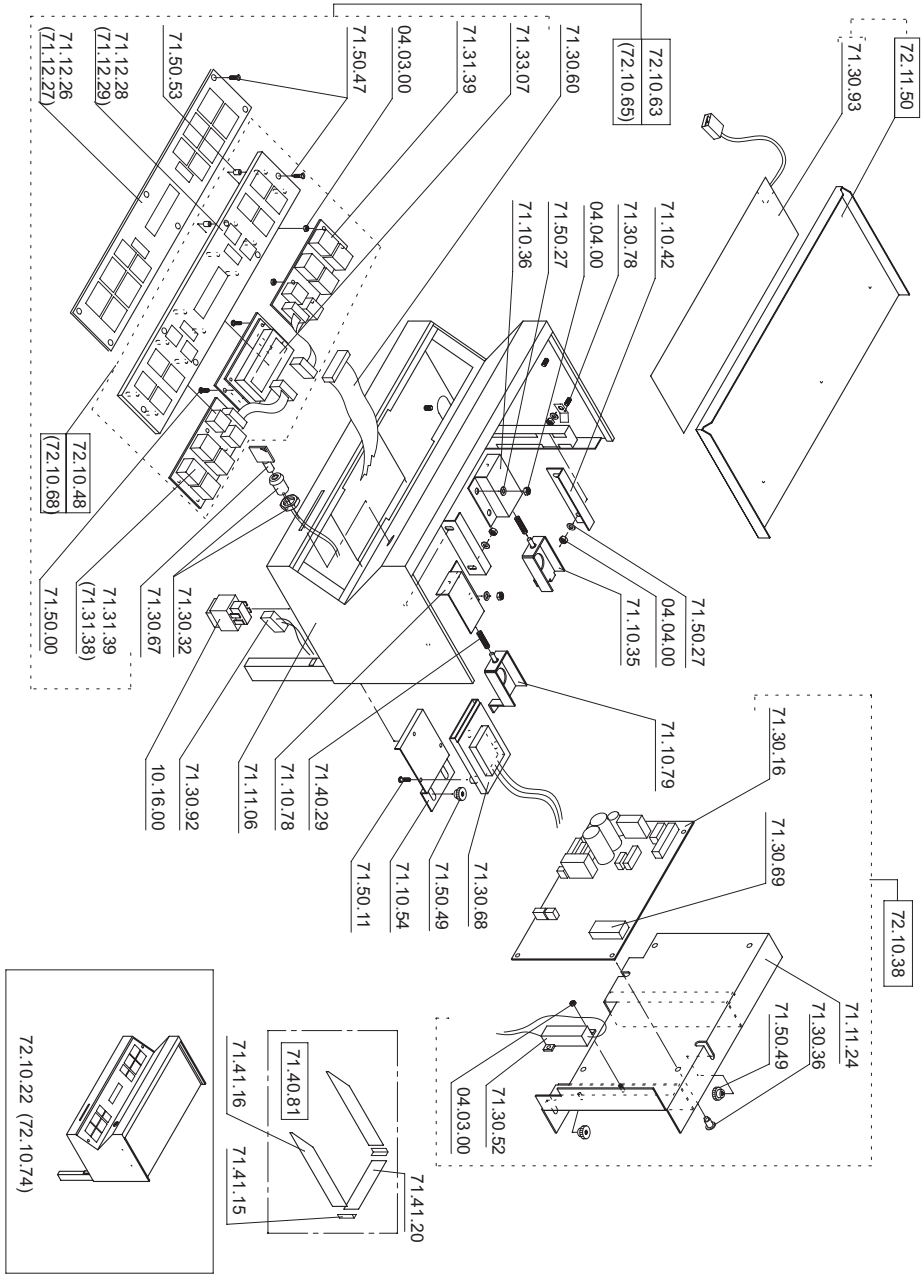

Part No	Description	Quantity
72.10.23	**Command module CT - flat, assembly**	**1**
04.04.00	Nut M4	8
10.16.00	Main switch with lens, red	1
71.10.35	Latch left hand	1
71.10.36	Latch guide left hand	1
71.10.42	Top cover support	2
71.10.54	Support card reader	1
71.10.78	Latch guide right hand	1
71.10.79	Latch right hand	1
71.11.10	Command module CT - flat	1
71.11.13	Top cover CT - flat	1
71.30.32	Key cylinder	1
71.30.60	Flat cable 26p.	1
71.30.67	Program key	1
71.30.68	Card reader	1
71.30.92	Wiring harness main switch CT	1
71.40.29	Spring ø D4.4x27	2
71.50.11	Oval head screw M3x8	3
71.50.27	Washer M4	8
71.50.49	Knurled nut M4	2
72.10.38	**CPU - deck CT, assembly**	**1**
04.03.00	Nut M3	2
71.11.24	Deck support plate CT	1
71.30.16	CPU-deck	1
71.30.36	Deck support piece	4
71.30.52	Motor resistor VDC 24	1
71.30.69	EPROM*	1
71.50.49	Knurled nut M4	3
72.10.63	**Keyboard CT, assembly**	**1**
71.12.26	Keyboard foil CT Version 2	1
72.10.48	**Keybord support CT, assembly**	**1**
04.03.00	Nut M3	4
71.12.28	Keyboard support CT Version2	1
71.33.07	Display without Poti	1
71.31.39	Touch button CT - K6 V99	2
71.50.00	Oval head screw M3x6	4
71.50.47	Countersunk screw M3 x 8	2
71.50.53	Spacer keyboard	4
71.40.85	**Plastiglas hedging CT - flat**	**1**
71.41.15	Profile to frame	2
71.41.20	Backwall for plastiglas hedging CT	1
71.41.25	Sidewall for plastiglas hedging, flat	2
72.10.70	**Command module extern CT flat, assembly**	**1**
72.10.65	**Keyboard CT extern, assembly**	**1**
71.12.27	Keyboard foil CT extern (TS/Choko)	1
72.10.68	**Keyboard support CT extern, assembly**	**1**
71.12.29	Keyboard support CT extern (TS/Choko)	1
71.31.38		1

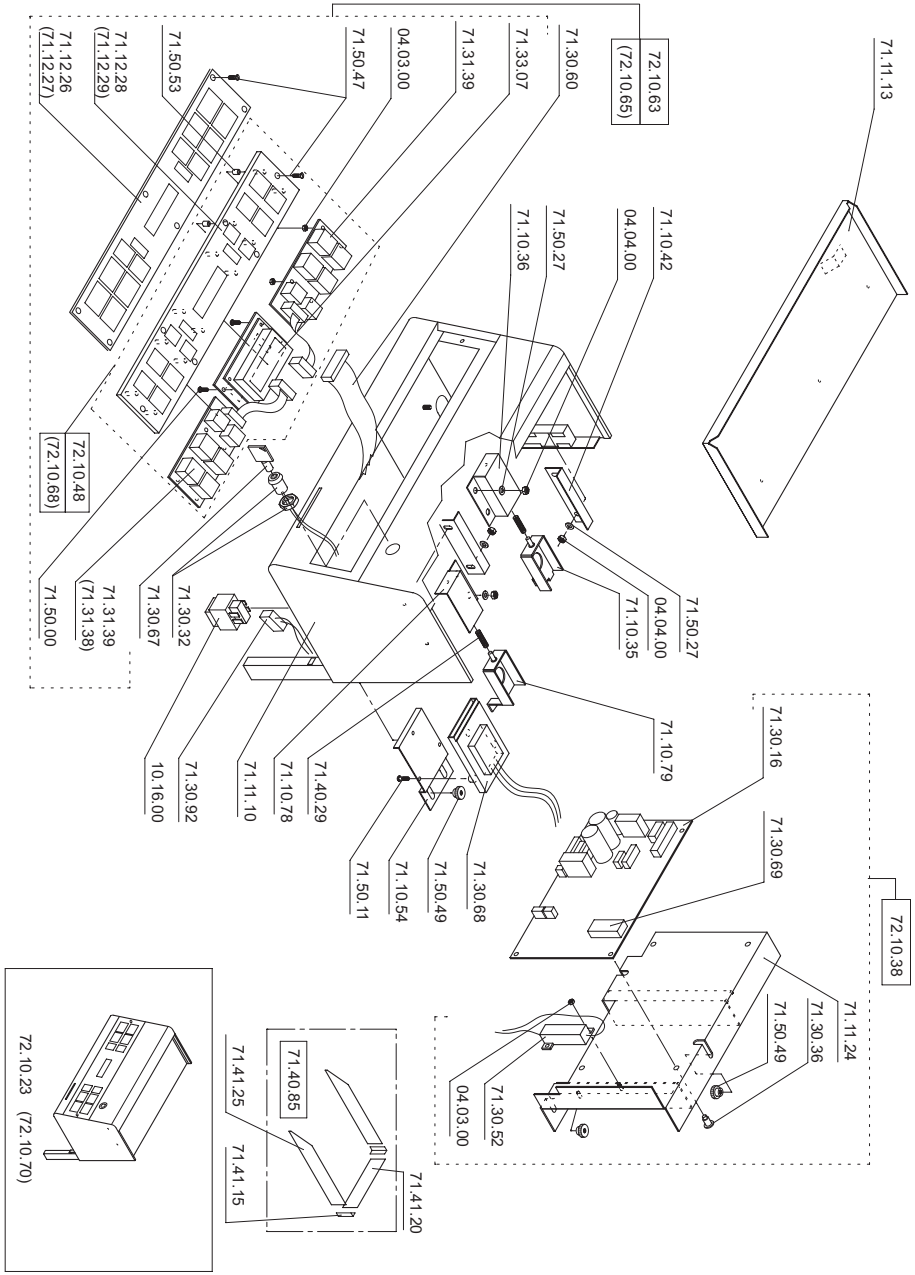

Part No	Description	Quantity
71.00.44	Outlet guide	2
71.10.54	Support card reader	1
71.11.75	Drainage tray, undercounter	1
71.11.84	Drainage tray grill, undercounter	1
71.11.85	Command unit, undercounter	1
71.11.86	Keyboard support, undercounter	1
71.11.87	Housing for command unit, undercounter	1
71.22.01	Elbow drainage tray, undercounter	1
71.22.02	Drainage connection, undercounter	1
71.22.52	T-piece	1
71.26.56	Overflow	1
71.30.32	Key cylinder	1
71.30.67	Program key	1
71.30.68	Card reader	1
71.31.16	Flat cable 26p, undercounter	1
71.31.17	Flat cable reader, undercounter	1
71.40.02	Bolt M5x5	2
71.40.30	Quick snap	2
71.40.39	Spring ø12/6.7x10	6
71.40.71	Drain tube 2.5m	3
71.41.30	Seal for command unit, undercounter	1
71.41.34	Protection clothing 400mm	1
71.41.37	Cover supply	1
71.50.11	Oval head screw M3x8	3
71.50.49	Knurled nut M4	5
71.50.70	Security nut M5	2
71.50.83	Countersunk screw M6x50	7
72.50.00	**Knurled nut M4x14**	**6**
72.80.05	**Keyboard undercounter, assembly**	**1**
04.03.00	Nut M3	4
71.11.76	Keyboard-foil, undercounter	1
71.11.77	Keyboard support, undercounter	1
71.33.07	Display without Poti	1
71.31.15	Touch button CT	1
71.50.00	Oval head screw M3x6	4
71.50.47	Countersunk screw M3x6	8
71.50.53		4

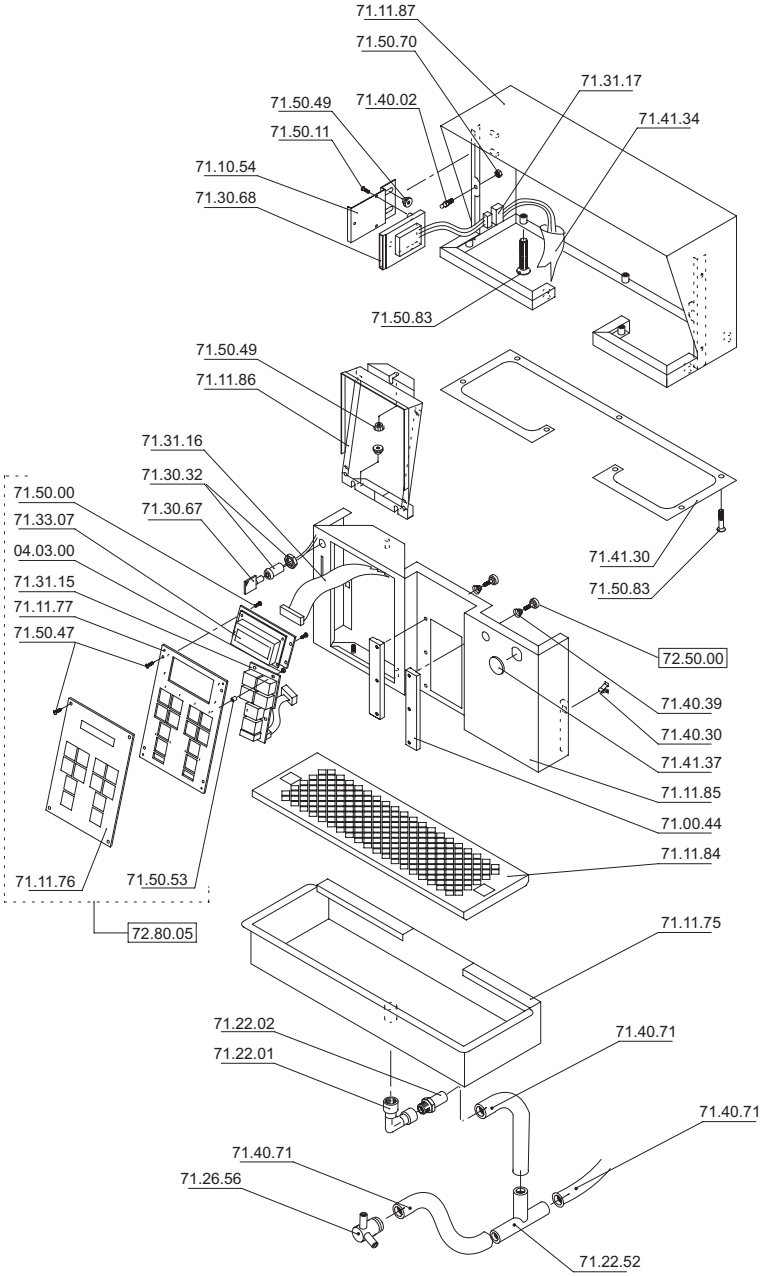

Part No	Description	Quantity
72.10.18	**Command module CTM/CTS - B&W, assembly**	**1**
04.04.00	Nut M4	8
71.10.23	Command module CTM/CTS - B&W	1
71.10.35	Latch left hand	1
71.10.36	Latch-guide left hand	1
71.10.42	Top cover support	2
71.10.43	Protection plate	1
71.10.54	Support card reader	1
71.10.78	Latch guide right hand	1
71.10.79	Latch right hand	1
71.30.32	Key cylinder	1
71.30.46	Heating cable	1
71.30.60	Flat cable 26	1
71.30.67	Program key	1
71.30.68	Card reader	1
71.40.29	Spring ø4.4x27	2
71.40.68	Cable clamp	1
71.50.11	Oval head screw M3x8	3
71.50.27	Washer M4	8
71.50.49	Knurled nut M4	5
72.10.17	**CPU-deck CTM/CTS, assembly**	**1**
04.03.00	Nut M3	2
71.10.41	Deck support plate CTM/CTS	1
71.30.16	CPU-deck	1
71.30.36	Deck support piece	4
71.30.52	24 VDC motor resistor	1
71.30.69	EPROM *	1
71.50.49	Knurled nut M4	3
72.11.55	**Keyboard CTM/CTS, assembly**	**1**
71.31.32	Keyboard foil CTM/CTS version 2	1
71.50.47	Countersunk screw M3x8	2
72.11.54	**Mounting plate CTM/CTS, assembly**	**1**
04.03.00	Nut M3	14
71.31.29	Touch button version 2, left	1
71.31.31	Touch button version 2, right	1
71.31.33	Keyboard support CTM/CTS version 2	1
71.33.07	Display without Poti	1
71.50.00	Oval head screw M3x6	4
71.50.52	Spacer display	4
71.50.53	Spacer keyboard	14
72.11.83	**Cup support to command module CTM/CTS B&W, assembly**	**1**
71.30.31	Heating element	1
71.40.64	**Plastiglas hedging CTM/CTS B&W**	**1**
71.41.15	Profile for hedging	2
71.41.16	Sidewall for plastiglas-hedging, B&W	2
71.41.19		1

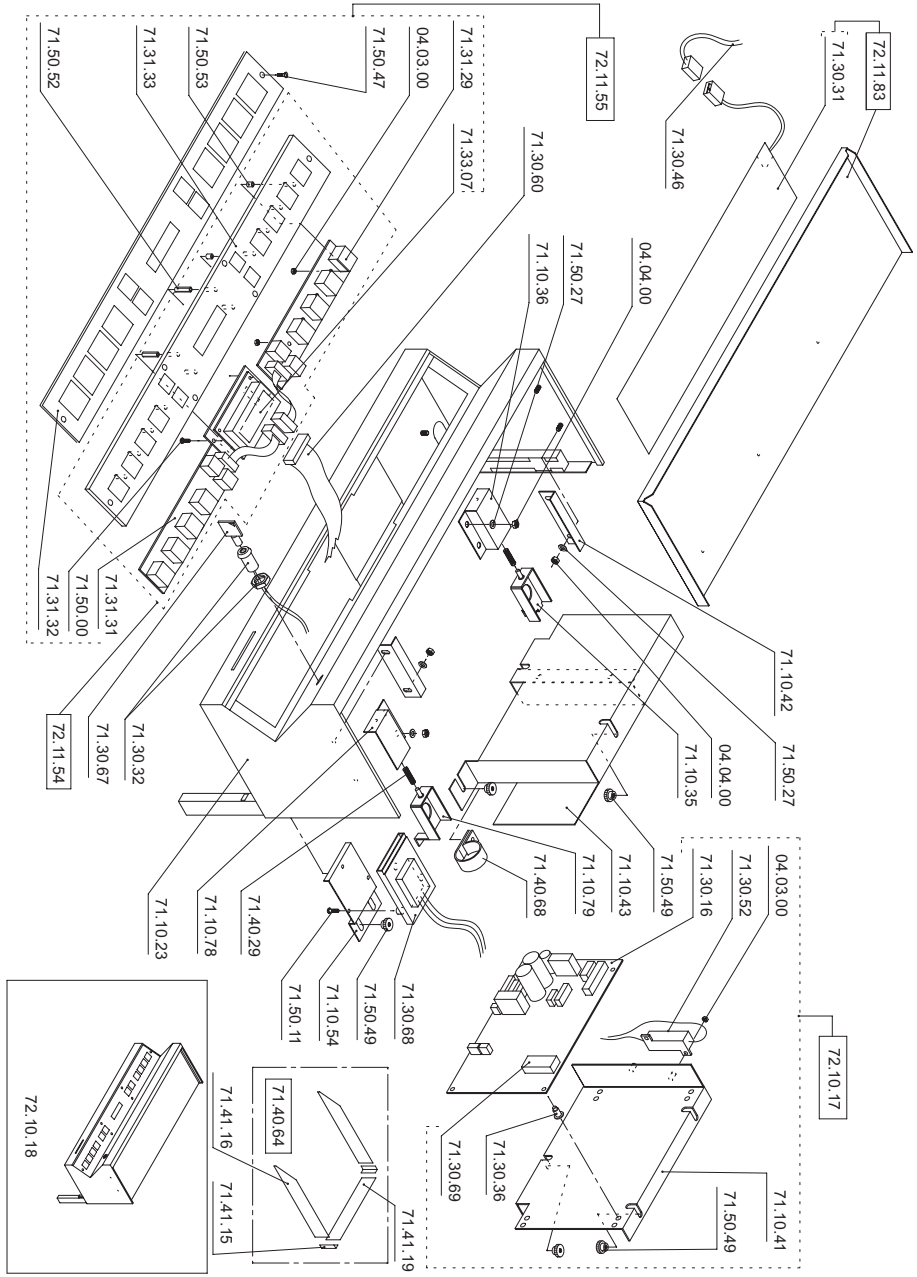

Part No	Description	Quantity
72.10.24	**Command module CTM/CTS flat,assembly**	**1**
04.04.00	Nut M4	9
71.10.34	Command module CTM/CTS flat	1
71.10.35	Latch left hand	1
71.10.36	Latch-guide left hand	1
71.10.42	Top cover support	2
71.10.43	Protection plate	1
71.10.46	Top cover command module flat CTM/CTS	1
71.10.54	Support card reader	1
71.10.78	Latch-guide right hand	1
71.10.79	Latch right hand	1
71.30.32	Key cylinder	1
71.30.60	Flat cable 26p.	1
71.30.67	Program key	1
71.30.68	Card reader	1
71.30.78	Faston 45°	1
71.32.54	Grounds wire command unit	1
71.40.29	Spring ø4.4x27	2
71.40.68	Cable clamp	1
71.50.11	Oval head screw M3x8	3
71.50.27	Washer M4	9
71.50.49	Knurled nut M4	5
72.10.17	**CPU-deck CTM/CTS, assembly**	**1**
04.03.00	Nut M3	2
71.10.41	Deck support plate CTM/CTS	1
71.30.16	CPU-deck	1
71.30.36	Deck support piece	4
71.30.52	24 VDC motor resistor	1
71.30.69	EPROM *	1
71.50.49	Knurled nut M4	3
72.10.20	**Keyboard CTM/CTS, assembly**	**1**
71.31.32	Keyboard foil CTM/CTS version 2	1
71.50.47	Countersunk screw M3x8	4
72.10.19	**Keyboard support CTM/CTS, assembly**	**1**
04.03.00	Nut M3	8
71.33.07	Display without Poti	1
71.31.29	Touch button version 2, left	1
71.31.31	Touch button version 2, right	1
71.31.33	Keyboard support CTM/CTS version 2	1
71.50.00	Oval head screw M3x6	4
71.50.52	Spacer display	4
71.50.53	Spacer keyboard	8
71.40.66	**Plastiglas hedging CTM/CTS flat**	**1**
71.41.15	Profile for hedging	2
71.41.25	Sidewall for plastiglas hedging, flat	2
71.41.19		1

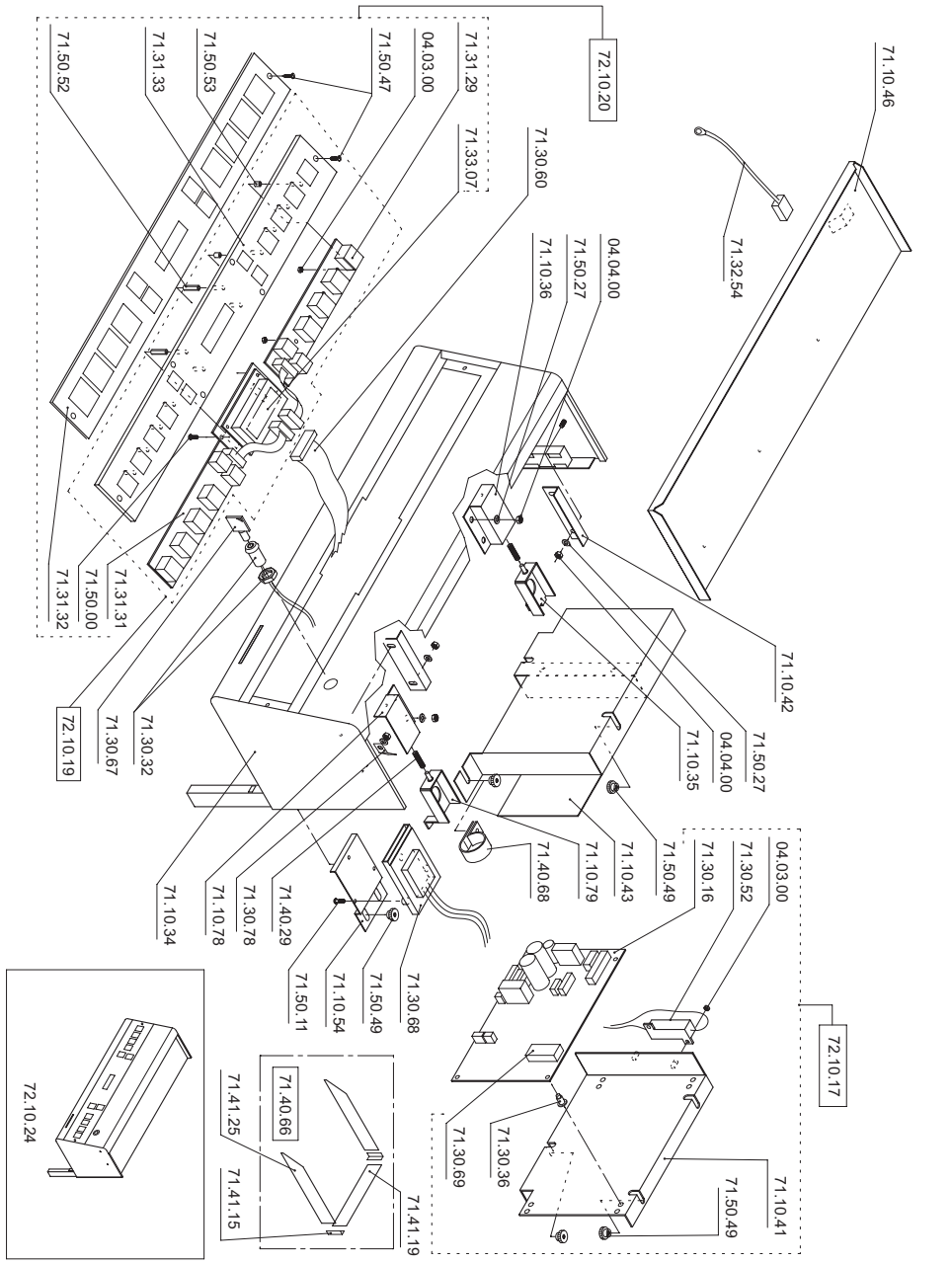

Part No	Description	Quantity
72.11.97	**Command moduel CT-MF5T, assembly**	**1**
04.04.00	Nut M	9
10.16.00	Main switch with lens, red	1
71.10.35	Latch left hand	1
71.10.36	Latch-guide left hand	1
71.10.42	Top cover support	2
71.10.54	Support card reader	1
71.10.78	Latch-guide right hand	1
71.10.79	Latch right hand	1
71.11.06	Command unit CT	1
71.30.32	Key cylinder	1
71.30.60	Flat cable 26	1
71.30.67	Program key	1
71.30.68	Card reader	1
71.30.78	Faston 45°	1
71.30.92	Wiring herness main switch CT	1
71.40.29	Spring ø4.4x27	2
71.50.11	Oval head screw M3x8	3
71.50.27	Washer M4	9
71.50.49	Knurdel nut M4	5
72.10.63	**Keyboard CT, assembly**	**1**
71.12.26	Keyboard foil CT version 2	1
72.10.48	**Keyboard support CT, assembly**	**1**
04.03.00	Nut M3	4
71.12.28	Keyboard support CT version 2	1
71.33.07	Display without Poti	1
71.31.39	Touch button CT-K6 V99	2
71.50.00	Oval head screw M3x6	4
71.50.47	Countersunk M3x8	2
71.50.53	Spacer keyboard	4
72.11.50	**Heding to command module CT, assembly**	**1**
71.30.93	Heating element CT	1
71.40.81	**Plastiglas hedging CT**	**1**
71.41.15	Profile for hedging	2
71.41.16	Sidewall for plastiglas-hedging, B&W	2
71.41.20	Backwall for plastiglas hedging	1
72.11.98	**CPU deck CT-MF5T, assembly**	**1**
04.03.00	Nut M3	2
71.11.24	Deck support plate CT	1
71.30.16	CPU-deck	1
71.30.36	Deck support piece	4
71.30.52	24V DC motor resistor	1
71.34.21	EPROM	1
71.50.49	Knurdel nut M4	3
72.10.74	**Command module CT extern B&W, assembly**	**1**
72.10.65	**Keyboard CT extern, assembly**	**1**
71.12.27	Keyboard foil CT extern	1
72.10.68	**Keyboard support CT extern, assembly**	**1**
71.12.29	Keyboard support CT extern	1
71.31.38		1

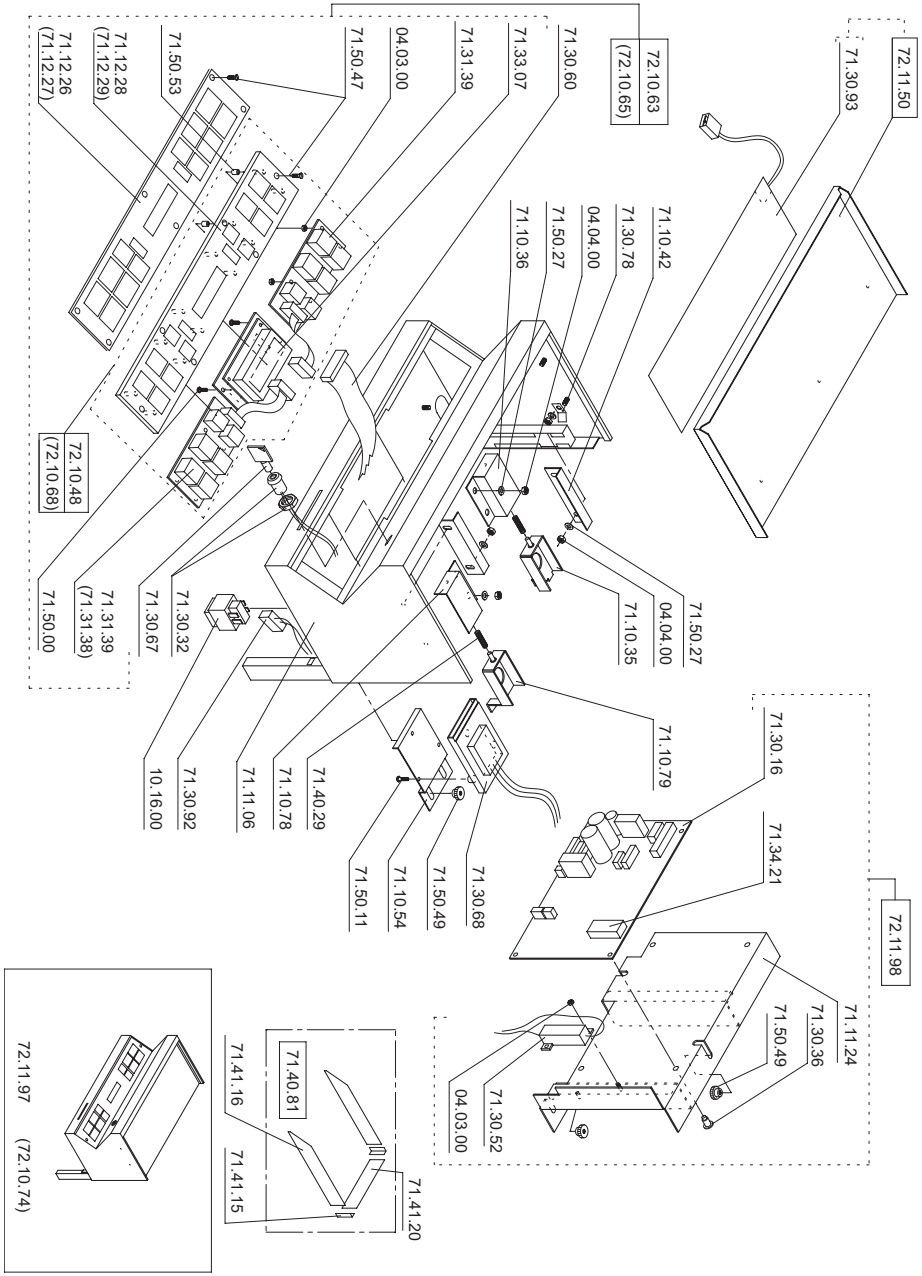

Part No	Description	Quantity
72.45.17	**Command module CB, assembly**	**1**
04.04.00	Nut M4	8
71.10.23	Command module CTM/CTS - B&W	1
71.10.35	Latch left hand	1
71.10.36	Latch-guide left hand	1
71.10.42	Top cover support	2
71.10.43	Protection plate	1
71.10.54	Support card reader	1
71.10.78	Latch guide right hand	1
71.10.79	Latch right hand	1
71.30.32	Key cylinder	1
71.30.46	Heating cable	1
71.30.60	Flat cable 26	1
71.30.67	Program key	1
71.30.68	Card reader	1
71.40.29	Spring ø4.4x27	2
71.40.68	Cable clamp	1
71.50.11	Oval head screw M3x8	3
71.50.27	Washer M4	8
71.50.49	Knurled nut M4	5
72.11.55	**CPU-deck CTM/CTS, assembly**	**1**
71.31.32	Keyboard foil CTM/CTS version 2	1
71.50.47	Countersunk screw M3x8	2
72.11.54	**Mounting plate CTM/CTS, assembly**	**1**
04.03.00	Nut M3	14
71.31.29	Touch button version 2, left	1
71.31.31	Touch button version 2, right	1
71.31.33	Keyboard support CTM/CTS version 2	1
71.33.07	Display	1
71.50.00	Oval head screw M3x6	4
71.50.52	Spacer display	4
71.50.53	Spacer keyboard	14
72.11.83	**Cup support to command module CTM/CTS B&W, assembly**	**1**
71.30.31	Heating element	1
71.40.64	**Plastiglas hedging CTM/CTS B&W**	**1**
71.41.15	Profile for hedging	2
71.41.16	Sidewall for plastiglas-hedging, B&W	2
71.41.19	Bachwall for plastiglas-hedging, CTM/CTS	1
72.45.18	**CPU-print CB, assembly**	**1**
04.03.00	Nut M3	2
71.10.41	Deck support plate CTM/CTS	1
71.30.16	CPU-deck	1
71.30.36	Deck support piece	4
71.30.52	24 VDC motor resistor	1
71.33.94	EPROM	1
71.50.49		3

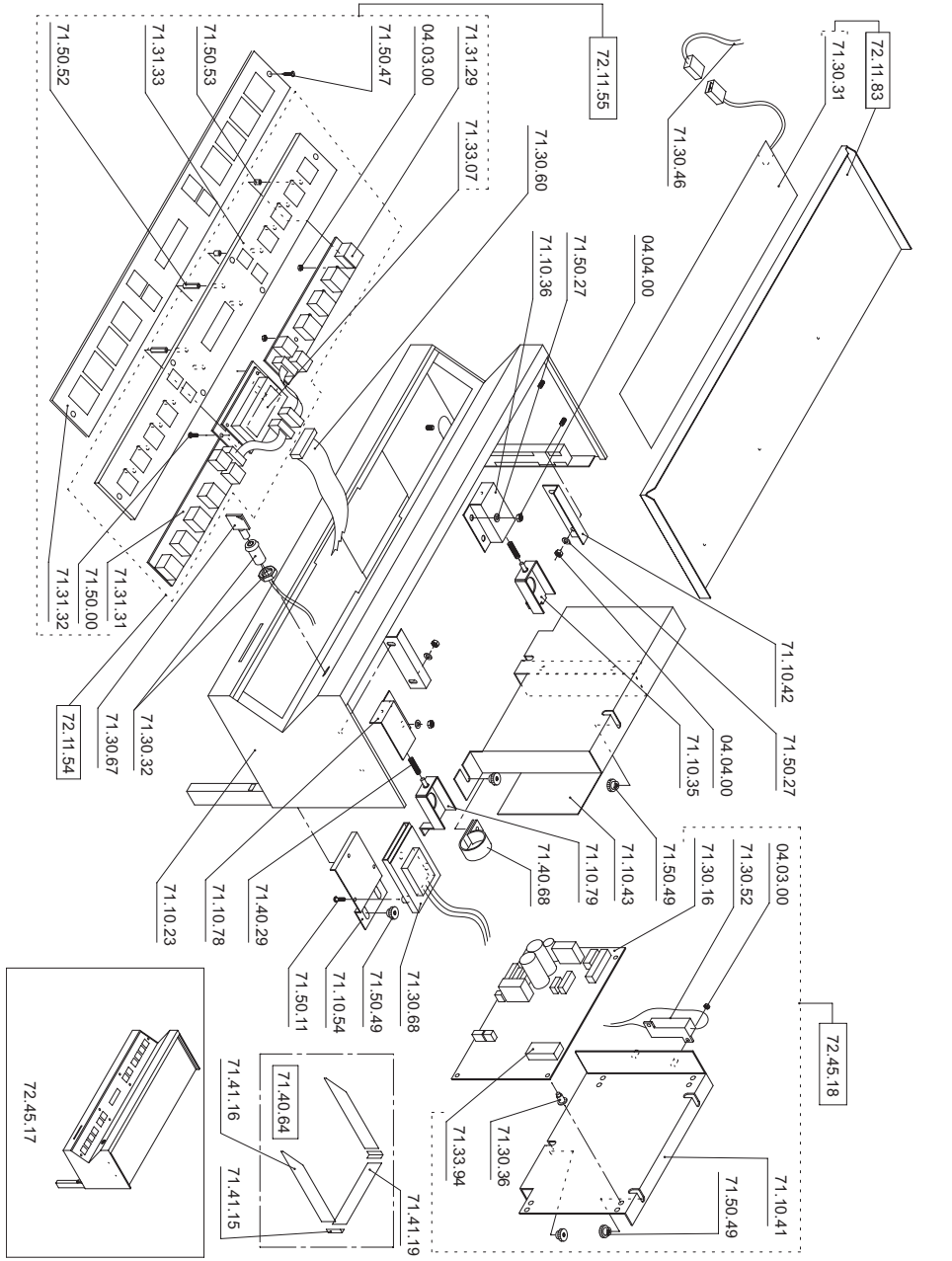

Part No	Description	Quantity
72.10.76	**Command module flat Easy, assembly**	1
04.04.00	Nut M4	8
10.16.00	Main switch with lens, red	1
71.10.35	Latch left hand	1
71.10.36	Latch-guide left hand	1
71.10.42	Top cover support	2
71.10.78	Latch-guide right hand	1
71.10.79	Latch right hand	1
71.11.10	Command module CT - flat	1
71.11.13	Top cover CT - flat	1
71.30.32	Key cylinder	1
71.30.67	Program key	1
71.31.76	Wiring harness BUS-INTERFACE w. Code 4 bit	1
71.31.85	Fuse SMD 7A	1
71.32.11	Wiring harness main switch Easyline	1
71.40.29	Spring ø4.4x27	2
71.40.68	Cable clamb	1
71.50.27	Washer M4	8
72.10.71	**Slave print Easyline, assembly**	1
71.11.24	Deck support plate CT	1
71.30.36	Deck support piece	2
71.31.92	Slave-Print Easyline	1
71.50.04	Cheese head screw M4x8	2
71.50.49	Knurled nut M4	3
72.10.82	**Keyboard Easyline, assembly**	1
72.10.81	**Keayboard support Easyline, assembly**	1
04.03.00	Nut M3	12
71.12.28	Keyboard support CT Version 2	1
71.31.39	Touch button CT-K6 V99	2
71.31.93	Master-Print Easyline	1
71.50.00	Oval head screw M3x6	4
71.50.47	Countersunk screw M3x8	6
71.50.53	Spacer keyboard	12
71.12.26	Keyboard foil CT Version 2	1
71.40.85	**Plastiglas hedging CT - flat**	1
71.41.15	Profile for hedging	2
71.41.20	Backwall for plastiglas hedging	1
71.41.25		2

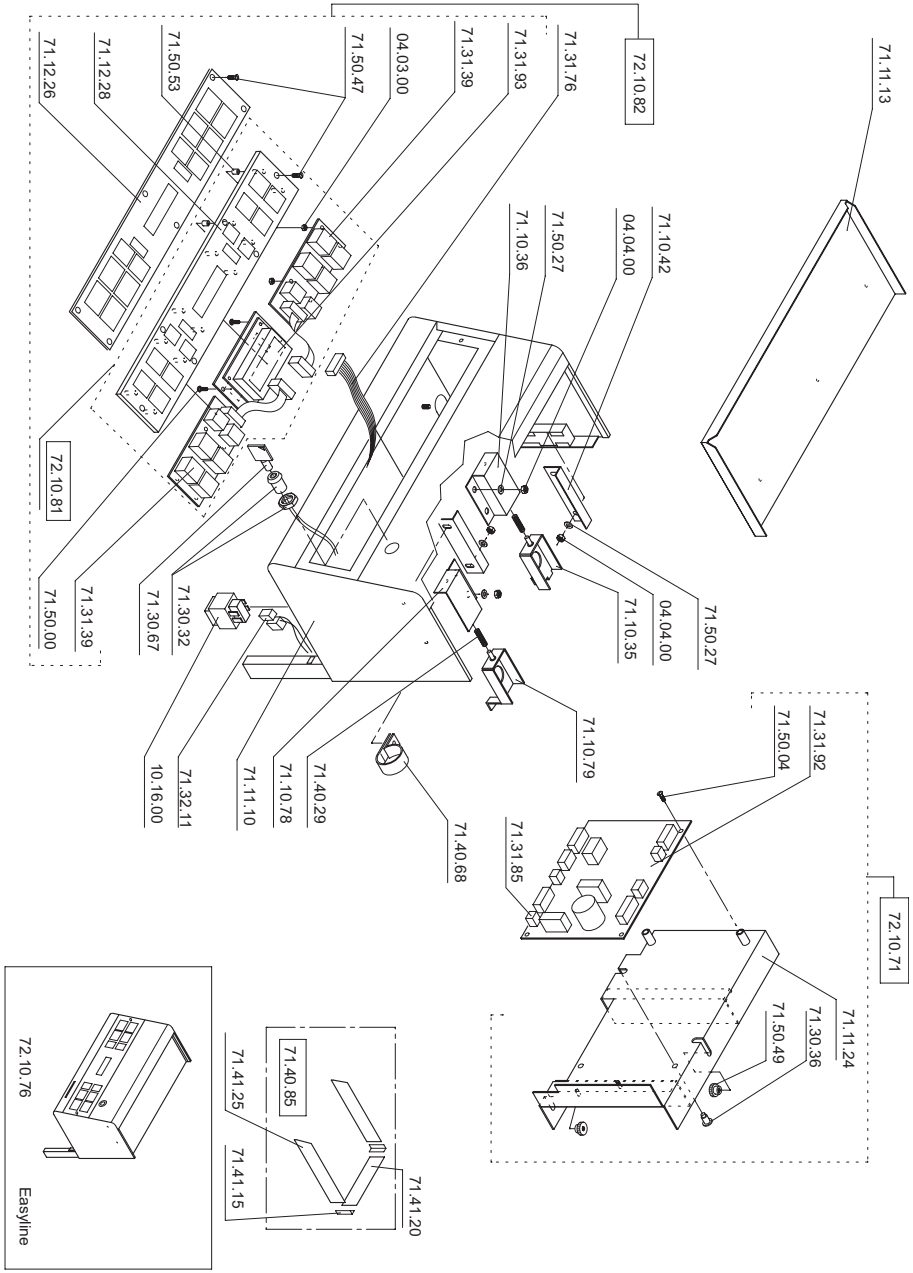

2. Body

			Page	Revision	
				List	Drawing
Body	CT		2.1.1 / 2.1.2	REV.4	REV.4
Body	CT	undercounter	2.2.1 / 2.2.2	REV.4	REV.4
Body	CTM / CTS		2.3.1 / 2.3.2	REV.4	REV.4
Body	CTM / CTS	undercounter	2.4.1 / 2.4.2	REV.4	REV.4
Body	CTMF5-T		2.5.1 / 2.5.2	REV.4	REV.4
Body	CB		2.6.1 / 2.6.2	REV.4	REV.4
Body	CT / CTM / CTS / CTMS	easyline	2.7.1 / 2.7.2	REV.4	REV.4

Part No	Description	Quantity
71.00.44	Outlet guide	2
71.10.64	Latch	1
71.11.15	Front panel CT	1
71.40.30	Quick snap	2
71.40.39	Spring ø12/6.7x10	6
71.40.60	Lock	1
71.40.90	Key-lock	1
71.50.03	Countersunk screw M4x12	6
72.50.00	Knurled screw M4x14 for coffee outlet	6
72.10.27	**Panel CTM/CTS assembly left hand side**	**1**
71.10.33	Sidewall left	1
71.40.30	Quick snap	1
71.40.31	Bolt M5x10	4
71.50.70	Securing nut M5	1
72.10.28	**Panel CTM/CTS assembly right hand side**	**1**
71.10.80	Sidewall right	1
71.40.30	Quick snap	1
71.40.31	Bolt M5x10	4
71.50.70	Securing nut M5	1
72.10.41	**Coffee ground drawer CT, assembly**	**1**
71.10.21	Basic drawer	1
71.11.23	Front panel for basic drawer CT	1
71.30.84	Magnet reed sensor M4	1
71.40.26	Drawer handle	1
71.50.41	Oval head screw ø4x10	4
71.50.60	Nut M3	2
72.12.16	**Drainage tray CT, assembly**	**1**
72.10.34	**Drainage tray CT**	**1**
71.11.18	Drainage tray grill CT	1
72.10.53	**Protection piece, assembly**	**1**
71.20.58	O-Ring ø14x1.78	1
72.11.21	**Backwall CT CE, assembly**	**1**
71.12.54	Backwall CT CE	1
71.40.31	Bolt M5x10	4
71.50.25	Spring washer M5	4
72.11.81	**Hedging CT1, assembly**	**1**
71.42.93	Edge protection M1 620mm	1
71.30.30	Heating element rear CTM/CTS	1
72.11.82	**Hedging CT2, assembly**	**1**
71.42.92	Edge protection M2 840mm	1
72.10.69	**Panel with hole left, assembly**	**1**
71.11.61	Sidewall left with hole	1
71.40.30	Quick snap	1
71.40.31	Bolt M5x10	4
71.50.70	Securing nut M5	1
72.10.40	**Panel with hole right assembly**	**1**
71.11.03	Sidewall rifht with hole	1
71.40.30	Quick snap	1
71.40.31	Bolt M5x10	4
71.50.70		1

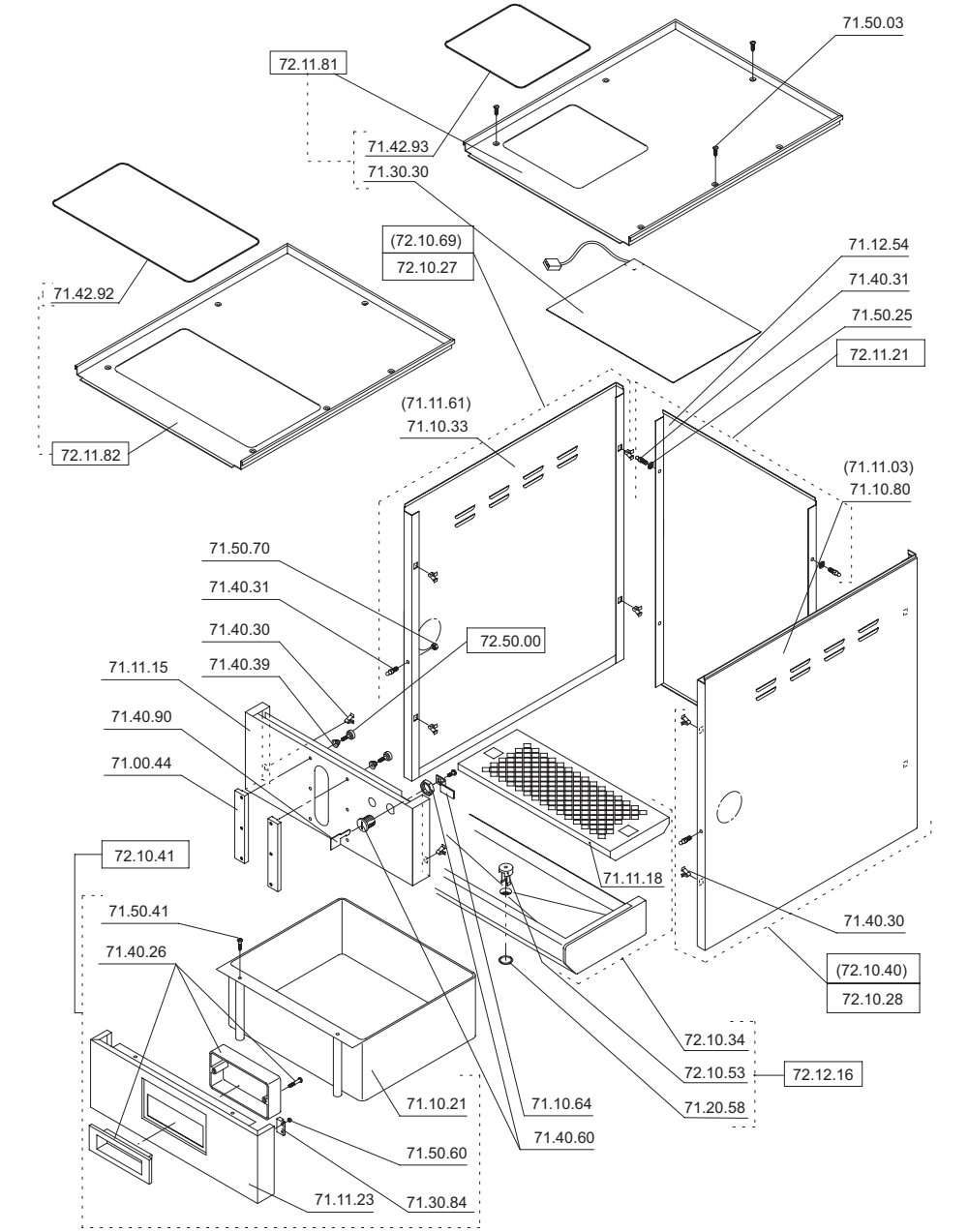

Part No	Description	Quantity
71.11.19	Cup support CT1	1
71.11.20	Cup support CT2	1
71.11.78	Protection plate CT undercounter	1
71.42.92	Edge protection M2 840mm	1
71.42.93	Edge protection M1 620mm	1
71.50.03	Countersunk screw M4x12	6
71.50.09	Cheese head screw M4x12	4
72.10.27	**Panel CTM/CTS assembly left hand side**	**1**
72.10.40	**Panel CTM/CTS assembly right hand side**	**1**
72.10.41	**Coffee ground drawer CT, assembly**	**1**
71.10.21	Basic drawer	1
71.11.23	Front panel for basic drawer CT	1
71.30.84	Magnet reed sensor M4	1
71.40.26	Drawer handler	1
71.50.41	Oval head screw ø4x10	4
71.50.60	Nut M3	2
72.80.04	**CPU-deck CTM/CTS undercounter, assembly**	**1**
04.03.00	Nut M3	2
71.10.41	CPU-deck CTM/CTS	1
71.11.80	Protection plate undercounter	1
71.30.16	CPU-deck	1
71.30.36	Deck support piece	4
71.30.52	24 VDC motor resistor	1
71.30.69	EPROM	1
71.50.49	Knurled nut M4	3
72.80.21		**1**

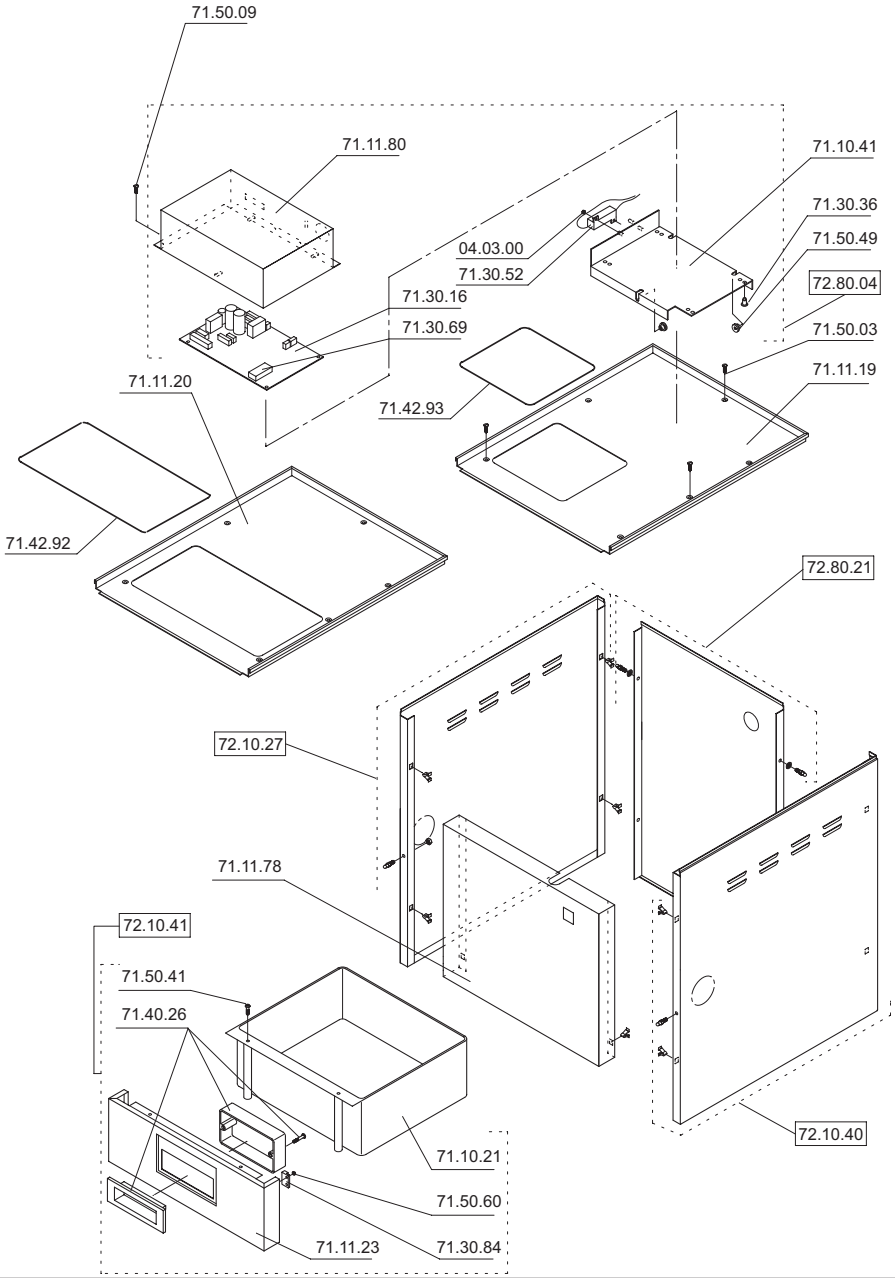

Part No	Description	Quantity
71.00.44	Outlet guide	2
71.10.32	Front panel CTM	1
71.10.64	Latch	1
71.10.82	Front panel CTS	1
71.40.39	Spring ø12/6.7x10	6
71.40.60	Lock	1
71.40.90	Key lock	1
71.50.03	Countersunk screw M4x12	10
72.10.03	**Coffee ground drawer CTM/CTS, assembly**	**1**
71.10.21	Basic drawer	1
71.10.22	Drawer front panel CTM/CTS	1
71.30.84	Magnet reed sensor M4	1
71.40.26	Drawer handle	1
71.50.41	Tallow-drop screw ø4x10	4
71.50.60	Nut M3	2
72.10.27	**Panel CTM/CTS assembly left hand side**	**1**
04.05.00	Nut M5	1
71.10.33	Sidewall left	1
71.40.30	Quick snap	1
71.40.31	Bolt M5x10	4
72.10.69	**Panel whti hole left, assembly**	**1**
71.11.61	Sidewall left with hole	1
72.10.28	**Panel CTM/CTS assembly right hand side**	**1**
04.05.00	Nut M5	1
71.10.80	Sidewall right	1
71.40.30	Quick snap	1
71.40.31	Bolt M5x10	1
72.10.40	**Panel with hole right, assembly**	**1**
71.12.24	Sidewall right with hole	1
72.10.29	**Panel CTM/CTS rear assembly**	**1**
71.10.24	Backwall CTM/CTS	1
71.40.31	Bolt M5x10	4
71.50.25	Spring washer M5	4
72.10.52	**Drainage tray CTM/CTS, assembly**	**1**
72.10.01	**Drainage tray CTM/CTS**	**1**
71.10.31	Drainage tray Grill CTM/CTS	1
72.10.53	**Protection piece, assembly**	**1**
71.20.58	O-Ring ø14x1.78	1
72.11.84	**Hedging CTM2, assembly**	**1**
71.42.92	Edge protection M2 840mm	1
71.30.30	Heating element rear CTM/CTS	1
72.11.85	**Hedging CTM1, assembly**	**1**
71.42.93	Edge protection M1 640mm	1
71.30.30	Heating element rear CTM/CTS	1
72.11.86	**Hedging CTS2, assembly**	**1**
71.42.92	Edge protection M2 840mm	1
72.11.87	**Hedging CTS1, assembly**	**1**
71.42.93	Edge protection M1 640mm	1
72.50.00		**6**

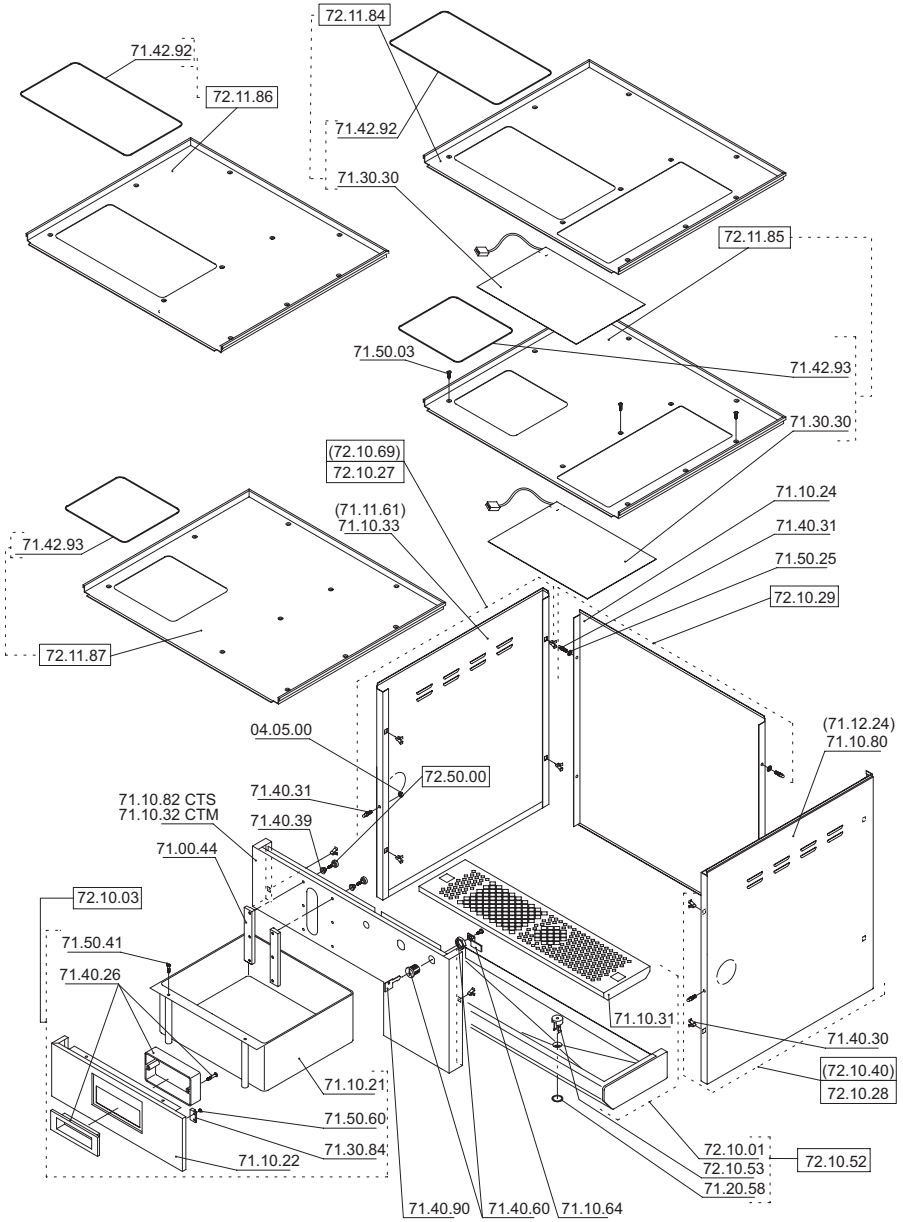

Part No	Description	Quantity
71.10.63	Cup support CTS1	1
71.10.65	Cup support CTM2	1
71.10.66	Cup support CTM1	1
71.10.68	Cup support CTS2	1
71.11.79	Front panel CTM/CTS undercounter	1
71.42.92	Edge protection M2 840mm	2
71.42.93	Edge protection M1 620mm	2
71.50.03	Countersunk screw M4x12	10
71.50.09	Cheese head screw M4x12	4
72.10.03	**Coffee ground drawer CTM/CTS, assembly**	**1**
71.10.21	Basic drawer	1
71.10.22	Drawer front panel CTM/CTS	1
71.30.84	Magnet reed sensor M4	1
71.40.26	Drawer handle	1
71.50.41	Oval head screw ø4x10	4
71.50.60	Nut M3	2
72.80.04	**CPU-deck CTM/CTS undercounter, assembly**	**1**
04.03.00	Nut M3	2
71.10.41	CPU-deck CTM/CTS	1
71.11.80	Protection plate CPU undercounter	1
71.30.16	CPU-print	1
71.30.36	Deck support piece	4
71.30.52	24 VDC motor resistor	1
71.30.69	EPROM	1
71.50.49	Knurled nut M4	3
72.80.07	**Sidewall left undercounter, assembly**	**1**
72.80.08	**Sidewall right undercounter, assembly**	**1**
72.80.20		**1**

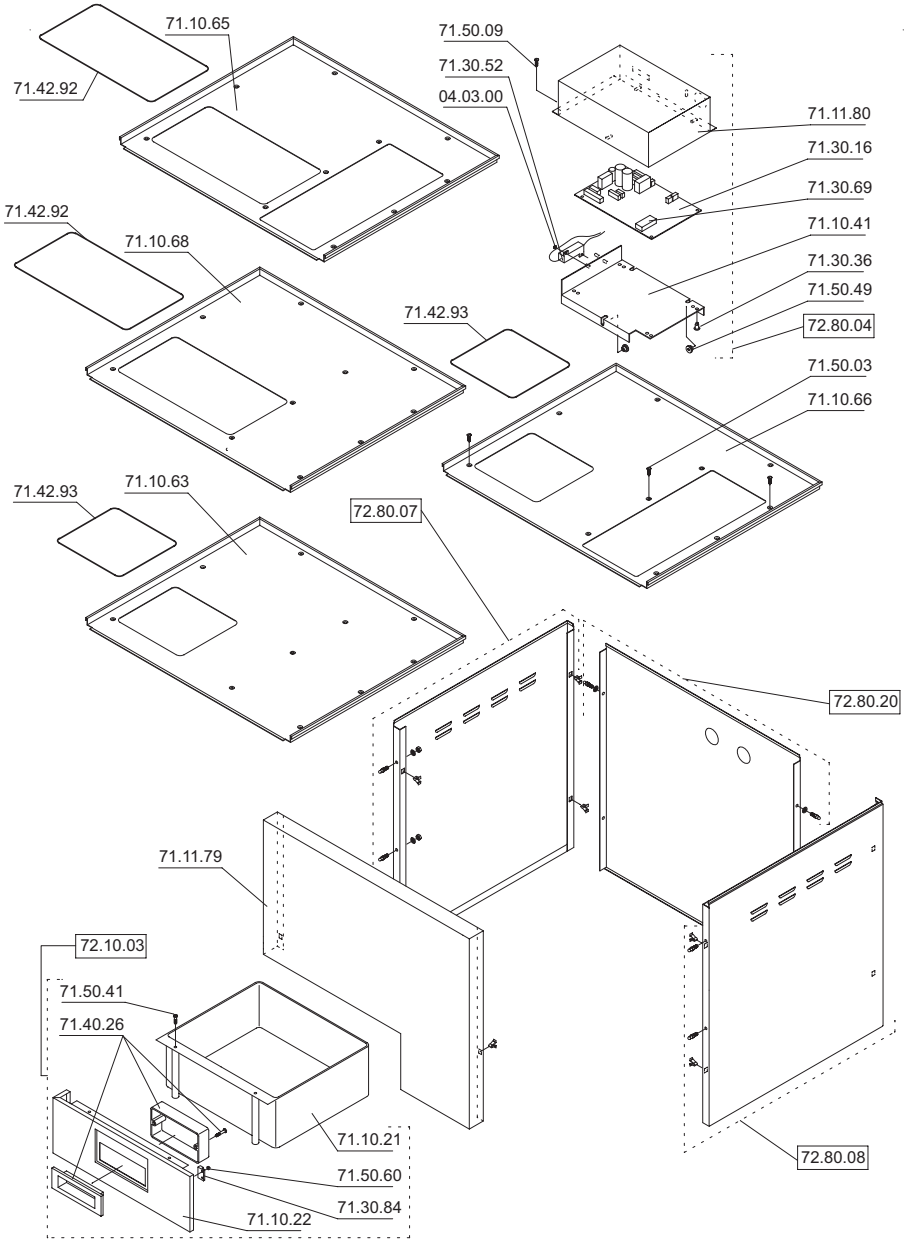

Part No	Description	Quantity
71.00.44	Outlet guide	2
71.10.64	Latch	1
71.11.15	Front panel CT	1
71.40.30	Quick snap	2
71.40.39	Spring ø12/6.7x10	6
71.40.60	Lock	1
71.40.90	Key lock	1
71.50.00	Knurled screw M4x14 for coffee outlet	6
71.50.03	Countersunk screw M4x12	6
72.10.27	**Panel CTM/CTS left hand side, assembly**	**1**
71.10.33	Sidewall left	1
71.40.30	Quick snap	1
71.40.31	Bolt M5x10	4
71.50.70	Securing nut M5	1
72.10.40	**Panel CT right hand side with hole, assembly**	**1**
71.11.03	Sidewall right with hole	1
71.40.30	Quick snap	1
71.40.31	Bolt M5x10	4
71.50.70	Securing nut M5	1
72.10.41	**Coffee ground drawer CT, assembly**	**1**
71.10.21	Basic drawer	1
71.11.23	Front panel for basic drawer CT	1
71.30.84	Magnet reed sensor M4	1
71.40.26	Drawer handle	1
71.50.41	Tallow-drop screw ø4x10	4
71.50.60	Nut M3	2
72.12.16	**Drainage tray CT, assembly**	**1**
72.10.34	**Drainage tray CT**	**1**
71.11.18	Drainage tray grill CT	1
72.10.53	**Protection piece, assembly**	**1**
71.20.58	O-Ring ø14x1.78	1
72.11.81	**Hedging CT1, assembly**	**1**
71.30.30	Heating element rear CTM/CTS	1
71.42.93	Edge protection M1 620mm	1
72.11.82	**Hedging CT2, assembly**	**1**
71.42.92	Edge protection M2 840mm	1
72.11.96	**Backwall CT-MF5T, assembly**	**1**
71.40.31	Bolt M5x10	4
71.50.25	Spring washer M5	4
72.10.69	**Panel with hole left, assembly**	**1**
71.11.61	Sidewall left with hole	1
71.40.30	Quick snap	1
71.40.31	Bolt M5x10	4
71.50.70		1

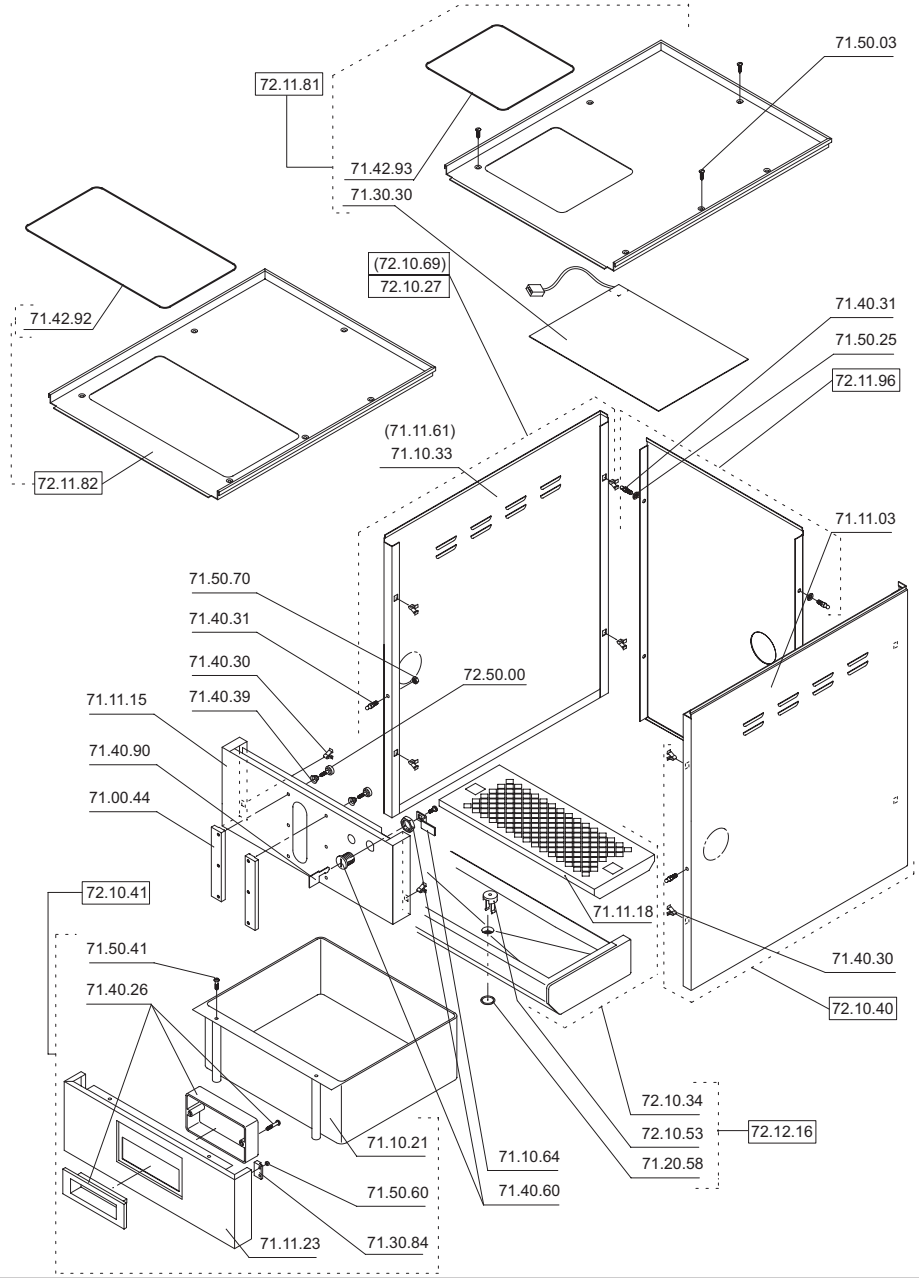

Part No	Description	Quantity
71.00.44	Outlet guide	2
71.10.64	Latch	1
71.14.91	Cup support CB	1
71.14.92	Front panel CB	1
71.30.30	Heating element rear	1
71.40.39	Spring ø12/6.7x10	6
71.40.60	Lock	1
71.40.90	Key lock	1
71.41.37	Cover supply	1
71.42.92	Edge protection M2 840mm	1
71.50.03	Countersunk screw M4x12	10
72.10.03	**Coffee ground drawer CTM/CTS, assembly**	**1**
71.10.21	Basic drawer	1
71.10.22	Drawer front panel CTM/CTS	1
71.30.84	Magnet reed sensor M4	1
71.40.26	Drawer handle	1
71.50.41	Tallow-drop screw ø 4x10	4
71.50.60	Nut M3	2
72.10.27	**Panel CTM/CTS assembly left hand side**	**1**
04.05.00	Nut M5	1
71.10.33	Sidewall left	1
71.40.30	Quick snap	1
71.40.31	Bolt M5x10	4
72.10.28	**Panel CTM/CTS assembly right hand side**	**1**
04.05.00	Nut M5	1
71.10.80	Sidewall right	1
71.40.30	Quick snap	1
71.40.31	Bolt M5x10	1
72.10.29	**Panel CTM/CTS rear assembly**	**1**
71.10.24	Backwall CTM/CTS	1
71.40.31	Bolt M5x10	4
71.50.25	Spring washer M5	4
72.10.52	**Drainage tray CTM/CTS, assembly**	**1**
72.10.01	**Drainage tray CTM/CTS**	**1**
71.10.31	Drainage tray Grill CTM/CTS	1
72.10.53	**Protection piece, assembly**	**1**
71.20.58	O-Ring ø14x1.78	1
72.45.21	**Protection plate, assembly**	**1**
71.52.31	Phillips pan head screw M8x12	2
71.43.58	Handle	1
72.50.00		6

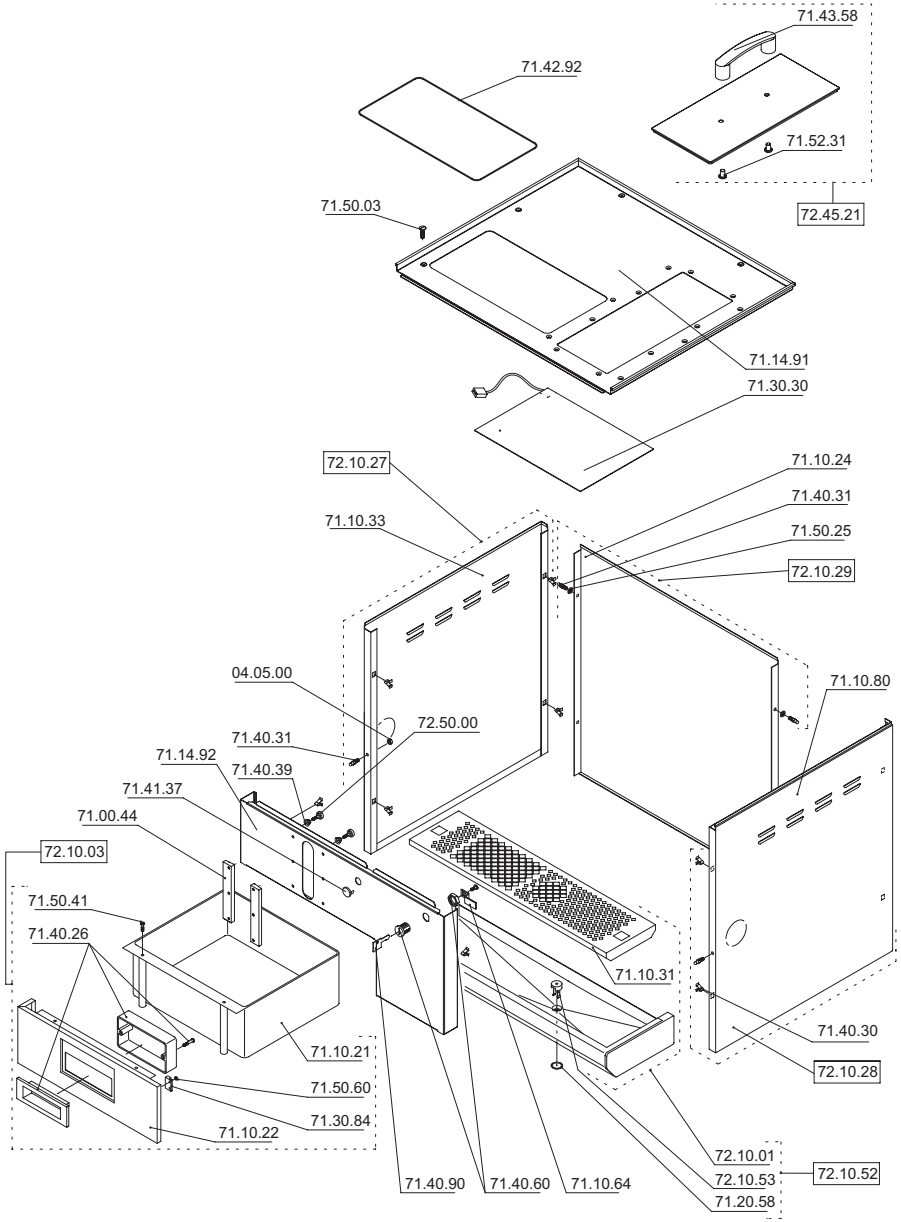

Part No	Description	Quantity
71.00.44	Outlet guide	2
71.10.64	Latch	1
71.11.15	Front panel CT	1
72.12.87	**Cup support CT1, assembly**	**1**
71.42.93	Seal drip tray M1, 620mm	1
72.11.82	**Cup support CT2, assembly**	**1**
71.42.92	Seal drip tray M2, 840mm	1
71.40.30	Quick snap	4
71.40.39	Spring ø12/6.7x10	6
71.40.60	Lock	1
71.40.90	Key-lock	1
71.50.03	Countersunk screw M4x12	5
72.50.00	Knurled screw M4x14 for coffee outlet	6
72.12.16	**Drainage tray CT, assembly**	**1**
72.10.34	**Drainage tray CT**	**1**
71.11.18	Drainage tray grill CT	1
72.10.53	**Protection piece, assembly**	**1**
71.20.58	O-Ring ø14x1.78	1
72.10.41	**Coffee ground drawer CT, assembly**	**1**
71.10.21	Basic drawer	1
71.11.23	Front panel for basic drawer CT	1
71.30.84	Magnet reed sensor M4	1
71.40.26	Drawer handle	1
71.50.41	Tallow-drop screw ø4 x 10	4
71.50.60	Nut M3	2
72.10.27	**Panel CTM/CTS assembly left hand side**	**1**
71.10.33	Sidewall left	1
71.40.31	Bolt M5x10	1
71.40.30	Quick snap	4
71.50.70	Securing nut M5	1
72.10.28	**Panel CTM/CTS assembly right hand side**	**1**
71.10.80	Sidewall right	1
71.40.31	Bolt M5x10	1
71.40.30	Quick snap	4
71.50.70	Securing nut M5	1
72.11.21	**Backwall CT CE, assembly**	**1**
71.12.54	Backwall CT CE	1
71.40.31	Bolt M5x10	4
71.50.25	Security washer M4	4
(72.12.86)	**Panel with hole right, assembly**	**1**
(71.12.24)	Sidewall right with hole	1
71.40.31	Bolt M5x10	1
71.40.30	Quick snap	4
71.50.70		1

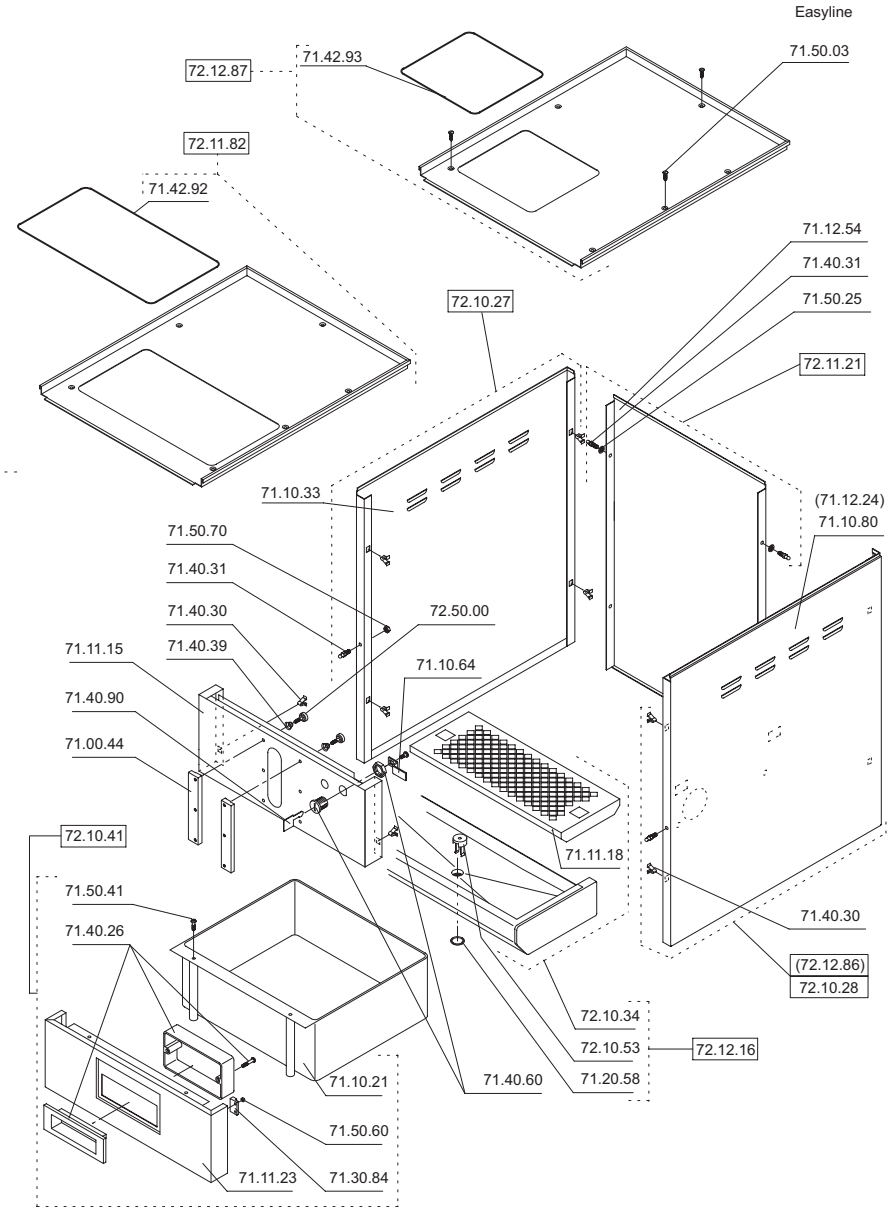

3. Outlet

				Page	Revision	
					List	Drawing
Outlet	coffee outlet			3.1.1 / 3.1.2	REV.4	REV.4
Outlet	coffee outlet	undercounter		3.2.1 / 3.2.2	REV.4	REV.4
Outlet	coffee outlet CB			3.3.1 / 3.3.2	REV.4	REV.4
Outlet	coffee-milk outlet		V1	3.4.1 / 3.4.2	REV.4	REV.4
Outlet	coffee-milk	security externally		3.4.3 / 3.4.4	REV.4	REV.4
Outlet	coffee-milk	security internally		3.4.5 / 3.4.6	REV.4	REV.4
Outlet	coffee-milk simply	security internally		3.5.1 / 3.5.2	REV.4	REV.4
Outlet	coffee-milk	undercounter	V1	3.6.1 / 3.6.2	REV.4	REV.4
Outlet	coffee-milk	undercounter	V2	3.6.3 / 3.6.4	REV.4	REV.4
Outlet	coffee-milk	easyline		3.7.1 / 3.7.2	REV.4	REV.4

Part No	Description	Quantity
72.10.14	**Coffee outlet, assembly**	**1**
71.00.56	Handle	1
71.10.61	Support palte	1
71.40.36	Sliding band 240mm	2
71.50.41	Oval head screw ø4x10	4
72.10.10	**Coffee tube, assembly**	**1**
10.09.10	O-ring 5x1.5	2
71.21.01	Coffee tube ø4/8x190	1
71.21.02	Securing clip	1
71.40.54	Connection angle short	1
71.40.69	Tie-wrap 85/22	2
90.15.21	Connection angle	1
72.10.11	**Outlet adapter, assembly**	**1**
71.40.40	Coffee outlet adapter	1
71.40.43	Washer special	1
71.50.50	Circlips ø11	1
71.52.07	PT-screw KA 40x8	1
72.10.13	**Coffee outlet with cover, assembly**	**1**
07.35.12	Recessed	2
71.20.75	Cover for coffee outlet	1
71.40.32	Coffee twin outlet	1
71.41.63	Spring bow	1
71.51.15		2

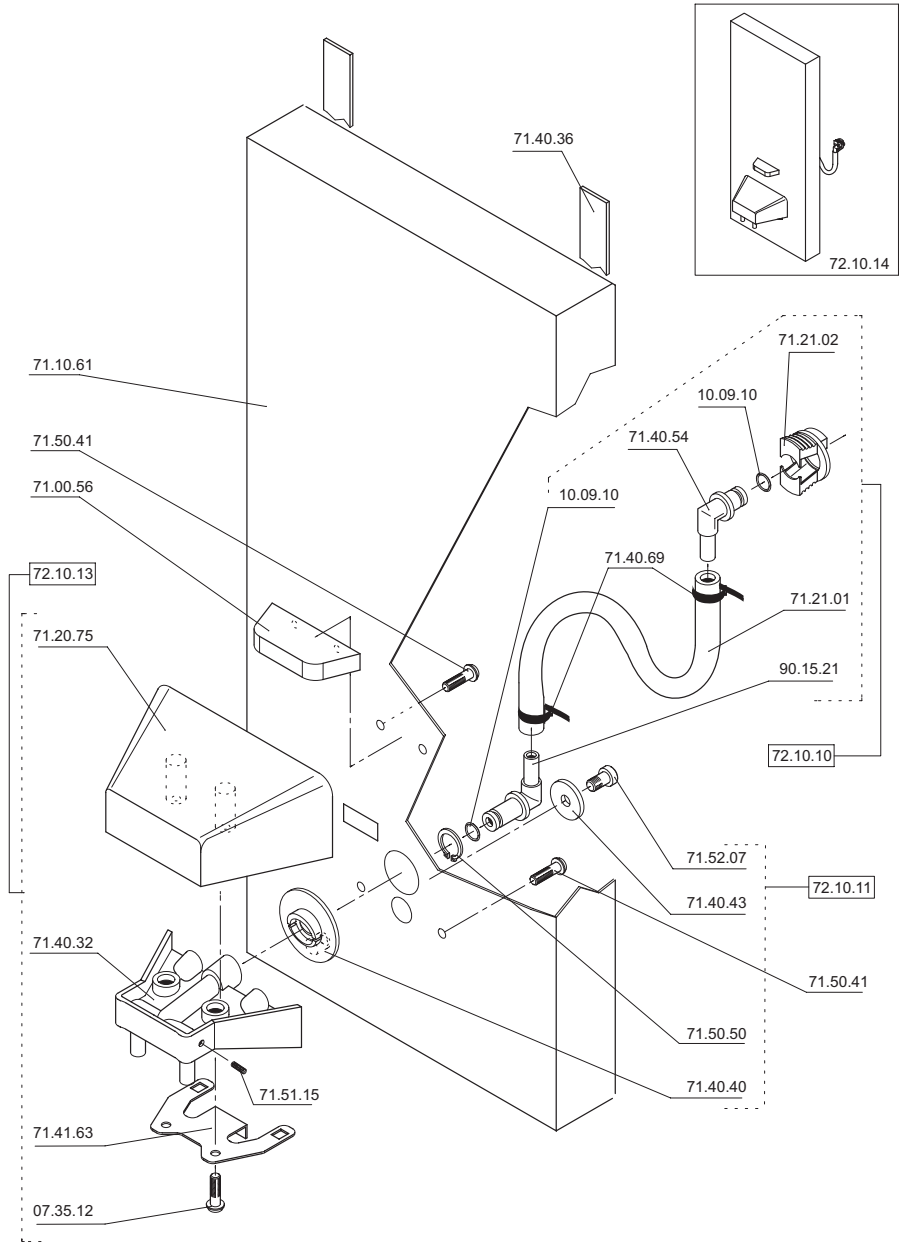

Part No	Description	Quantity
72.80.32	**Coffee outlet undercounter, assembly**	**1**
00.35.00	Washer ø3.5	1
07.35.12	Recessed head screw ø3.5x12	1
71.00.65	Guide coffee-milk outlet	2
71.11.90	Support plate	1
71.20.75	Cover for coffee outlet	1
71.40.32	Coffee twin outlet	1
71.50.51	Tallow-drop screw KA 30x8	2
71.51.15	Pin screw M3x6	2
72.10.11	**Outlet adapter, assembly**	**1**
71.40.40	Outlet adapter	1
71.40.43	Washer special	1
71.50.50	Circlips ø11	1
71.52.07	PT-screw KA 40x8	1
72.80.16	**Coffee-tube undercounter, assembly**	**1**
10.09.10	O-ring ø5x1.5	1
71.22.04	Tube ø4/8x300	1
71.23.22	Over pressur clip	1
71.28.07	Straight fitting 6-1/8"	1
71.40.69	Tie-wrap 85/22	2
90.15.21		1
71.31.18	Heating tube undercounter	1
71.44.77		1

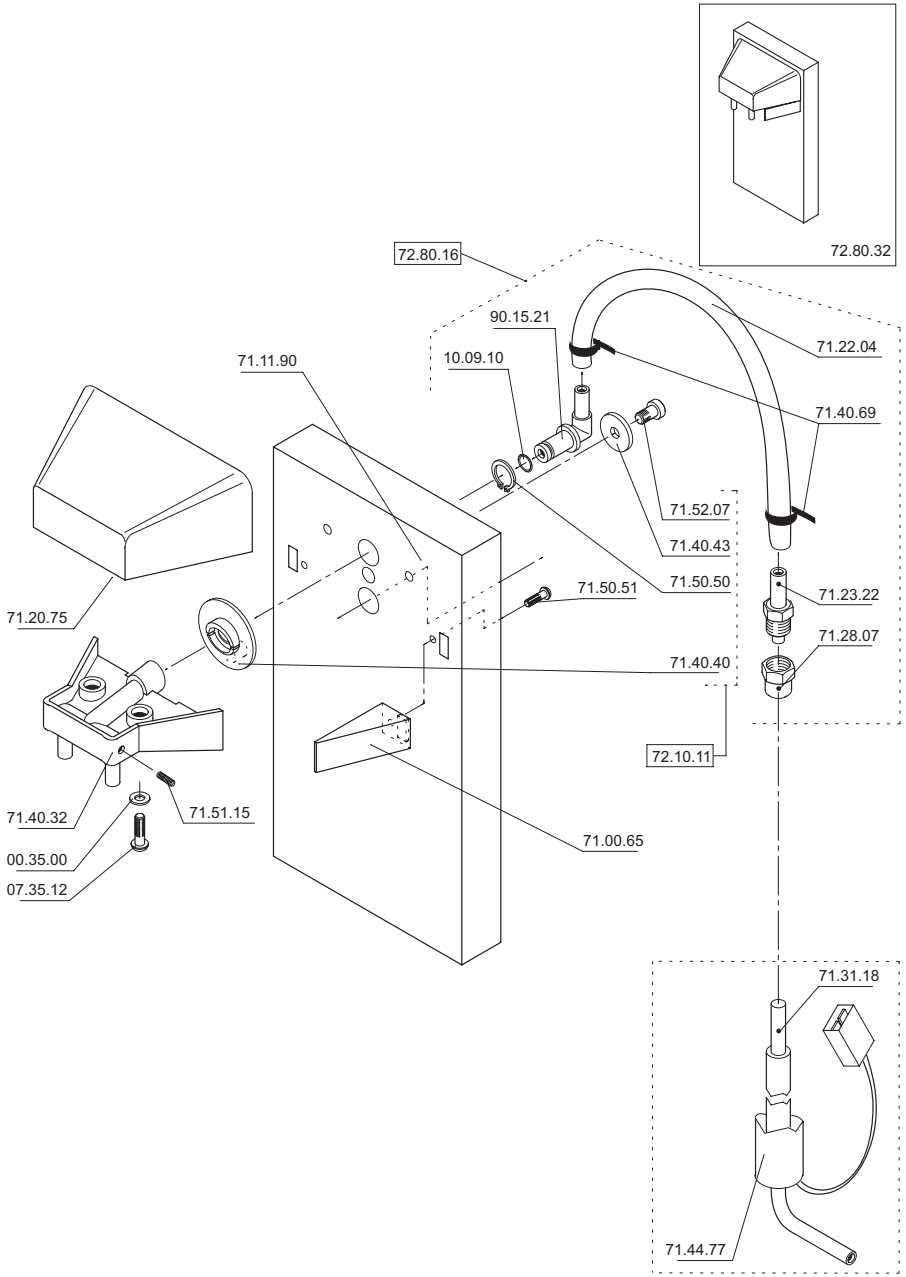

Part No	Description	Quantity
72.45.11	Outlet CB, assembly	1
71.14.93	Outlet CB	1
71.40.36	Sliding band 240mm	2
71.45.87	Coffee outlet CB	1
71.45.88	Nozzle for coffee outlet CB	1
71.50.41	Oval head screw M4x10	4
91.39.30		1

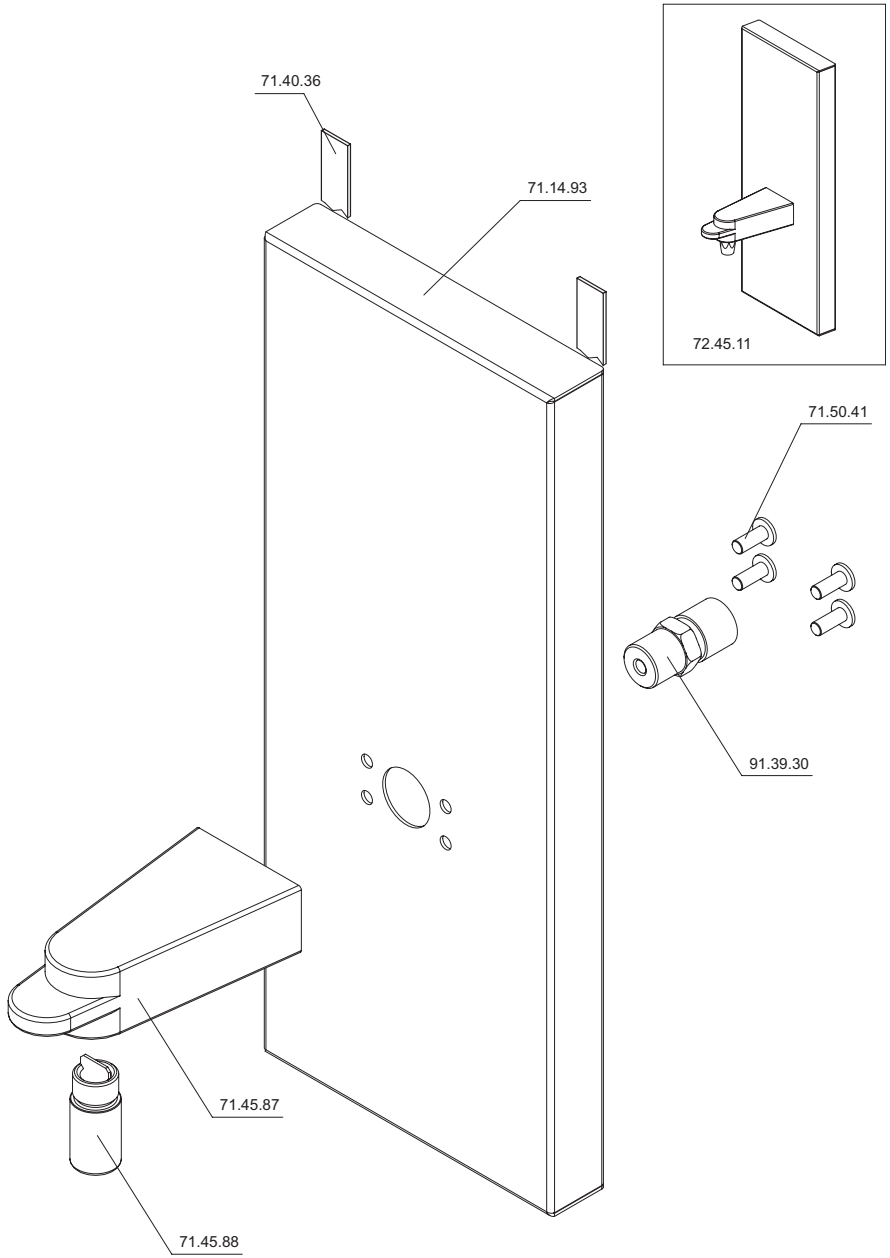

Part No	Description	Quantity
72.11.80	**Coffee-milk outlet, assembly**	**1**
71.40.32	Coffe twin outlet	1
71.40.36	Sliding band 240mm	2
71.40.45	Protection piece	1
71.51.15	Pin screw M3x6	2
90.36.40	Circlips ø28	1
72.10.09	**Milk flow, assembly**	**1**
71.21.03	Milk flow ø40x59	1
90.36.20	O-ring ø17x1.5	1
90.36.23	Pin ø2x8	1
72.10.10	**Coffee tube, assembly**	**1**
10.09.10	O-ring 5x1.5	2
71.21.01	Coffe tube ø4/8x180	1
71.21.02	Securing clip	1
71.40.54	Connection angle short	1
71.40.69	Tie-wrap 85/22	2
90.15.21	Connection angle	2
72.10.11	**Outlet adapter, assembly**	**1**
71.40.40	Coffee outlet adapter	1
71.40.43	Washer special	1
71.50.50	Circlips ø11	1
71.52.07	PT-screw KA 40x8	1
72.12.21	**Support plate coffee-milk, security externally**	**1**
90.13.15	**Foamer head with twin outlet, assembly**	**1**
90.13.11	**Foamer head, assembly**	**1**
71.20.96	Foamer head for coffe-machine	1
90.13.13	Milk twin outlet	1
90.13.20	**Ventilate cover, assembly**	**1**
80.03.21	O-Ring ø36x2	1
90.13.22	Ventilate cover	1
90.13.23	Ventilate nozzle	1
90.13.12	**Head extension, assembly**	**1**
20.19.29	O-ring ø18x1.5	1
71.40.52	Extension cover	1
80.03.21	O-ring ø36x2	1
90.13.13	Milk twin outlet	1
90.14.10		**1**

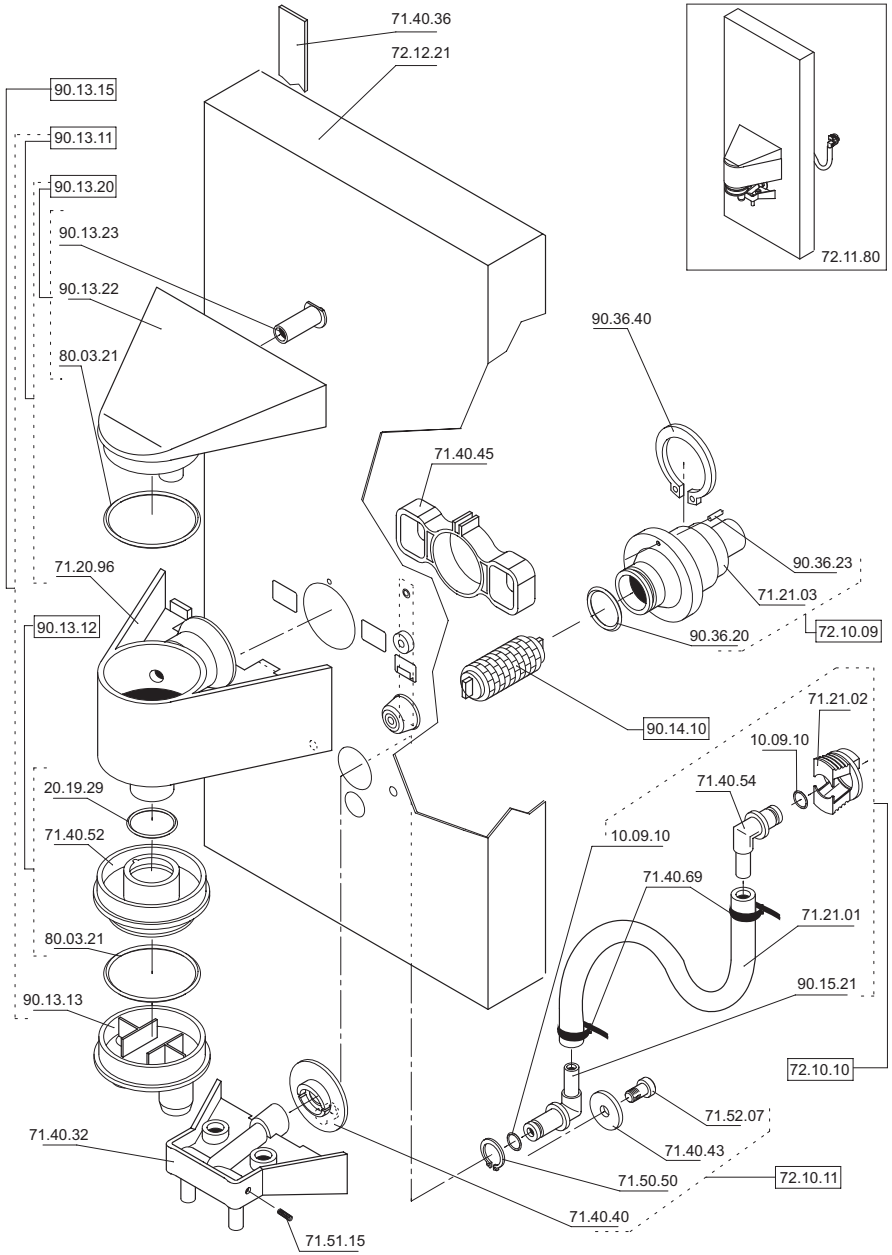

Part No	Description	Quantity
72.10.15	**Coffee-milk outlet (security externally), assembly**	**1**
71.40.32	Coffe twin outlet	1
71.40.36	Sliding band 240mm	2
71.40.45	Protection piece	1
71.51.15	Pin screw M3x6	2
90.36.40	Circlips ø28	1
72.10.09	**Milk flow, assembly**	**1**
71.21.03	Milk flow ø40x59	1
90.36.20	O-ring ø17x1.5	1
90.36.23	Pin ø2x8	1
72.10.10	**Coffee tube, assembly**	**1**
10.09.10	O-ring ø5x1.5	2
71.21.01	Coffee tube ø4/8x190	1
71.21.02	Securing-clip	1
71.40.54	Connection angle short	1
71.40.69	Tie-wrap 85/22	2
90.15.21	Connection angle	1
72.10.11	**Outlet adapter, assembly**	**1**
71.40.40	Coffee outlet adapter	1
71.40.43	Washer special	1
71.50.50	Circlips ø11	1
71.52.07	PT-screw KA 40x8	1
72.10.96	**Foamer head V2, assembly**	**1**
71.60.21	Milk double outlet	1
80.03.21	O-ring ø36x2	1
90.13.11	**Foamer head twin outlet, assembly**	**1**
71.20.96	**Foamer head for coffee-machine**	**1**
90.13.20	**Ventilate cover, assembly**	**1**
80.03.21	O-ring ø36x2	1
90.13.22	Ventilate cover	1
90.13.23	Ventilate nozzle	1
72.12.21	**Support plate coffee-milk, security externally**	**1**
90.14.10		**1**

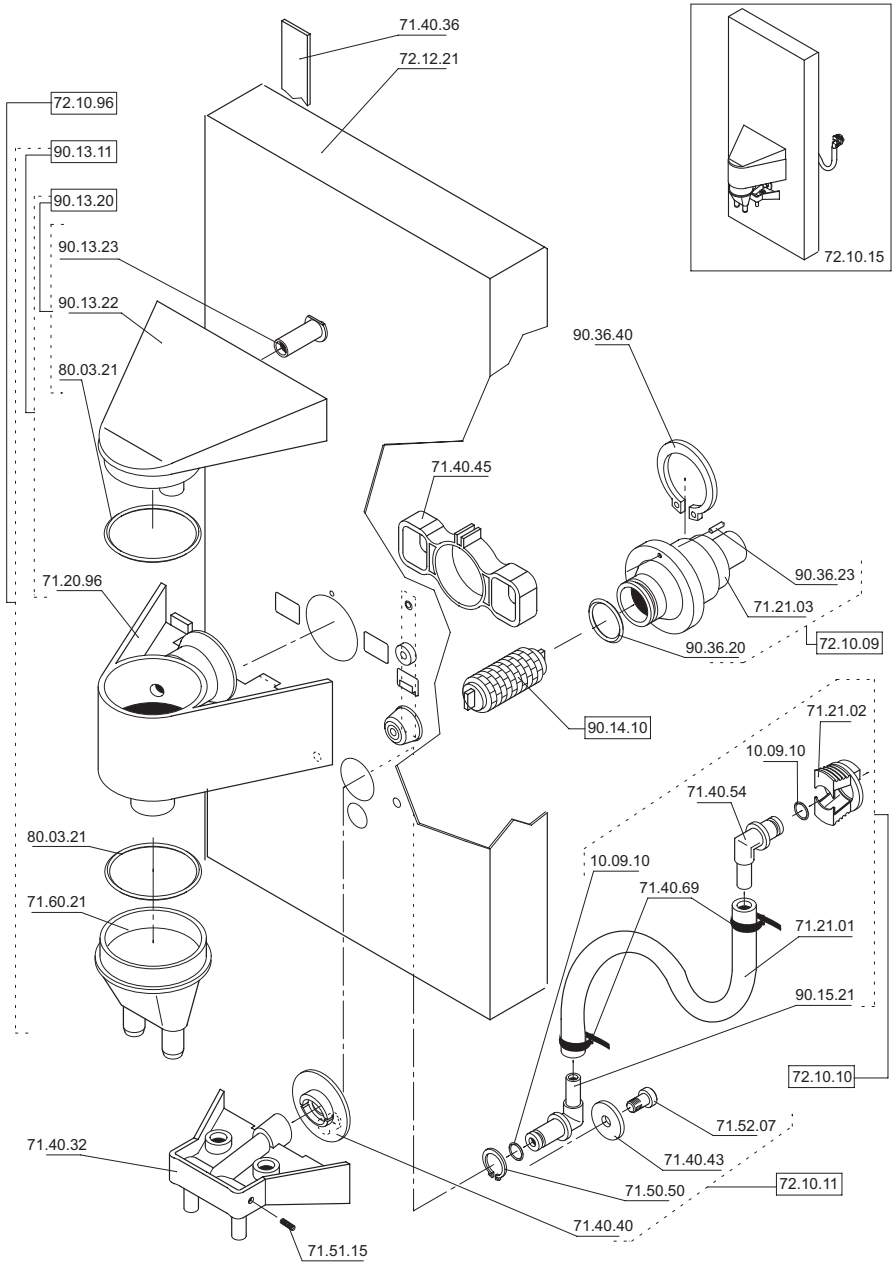

Part No	Description	Quantity
72.11.93	**Coffee-milk outlet (security internally), assembly**	**1**
71.40.32	Coffe twin outlet	1
71.40.36	Sliding band 240mm	2
71.40.45	Protection piece	1
71.43.28	Cover	1
71.51.15	Pin screw M3x6	2
90.36.40	Circlips ø28	1
72.10.09	**Milk flow, assembly**	**1**
71.21.03	Milk flow ø40x59	1
90.36.20	O-ring ø17x1.5	1
90.36.23	Pin ø2x8	1
72.10.10	**Coffee tube, assembly**	**1**
10.09.10	O-ring ø5x1.5	2
71.21.01	Coffee tube ø4/8x190	1
71.21.02	Securing-clip	1
71.40.54	Connection angle short	1
71.40.69	Tie-wrap 85/22	2
90.15.21	Connection angle	1
72.10.11	**Outlet adapter, assembly**	**1**
71.40.40	Coffee outlet adapter	1
71.40.43	Washer special	1
71.50.50	Circlips ø11	1
71.52.07	PT-screw KA 40x8	1
72.10.96	**Foamer head V2, assembly**	**1**
71.60.21	Milk double outlet	1
80.03.21	O-ring ø36x2	1
90.13.11	**Foamer head twin outlet, assembly**	**1**
71.20.96	**Foamer head for coffee-machine**	**1**
90.13.20	**Ventilate cover, assembly**	**1**
80.03.21	O-ring ø36x2	1
90.13.22	Ventilate cover	1
90.13.23	Ventilate nozzle	1
72.12.22	**Support plate coffee-milk, security internally**	**1**
90.14.10		**1**

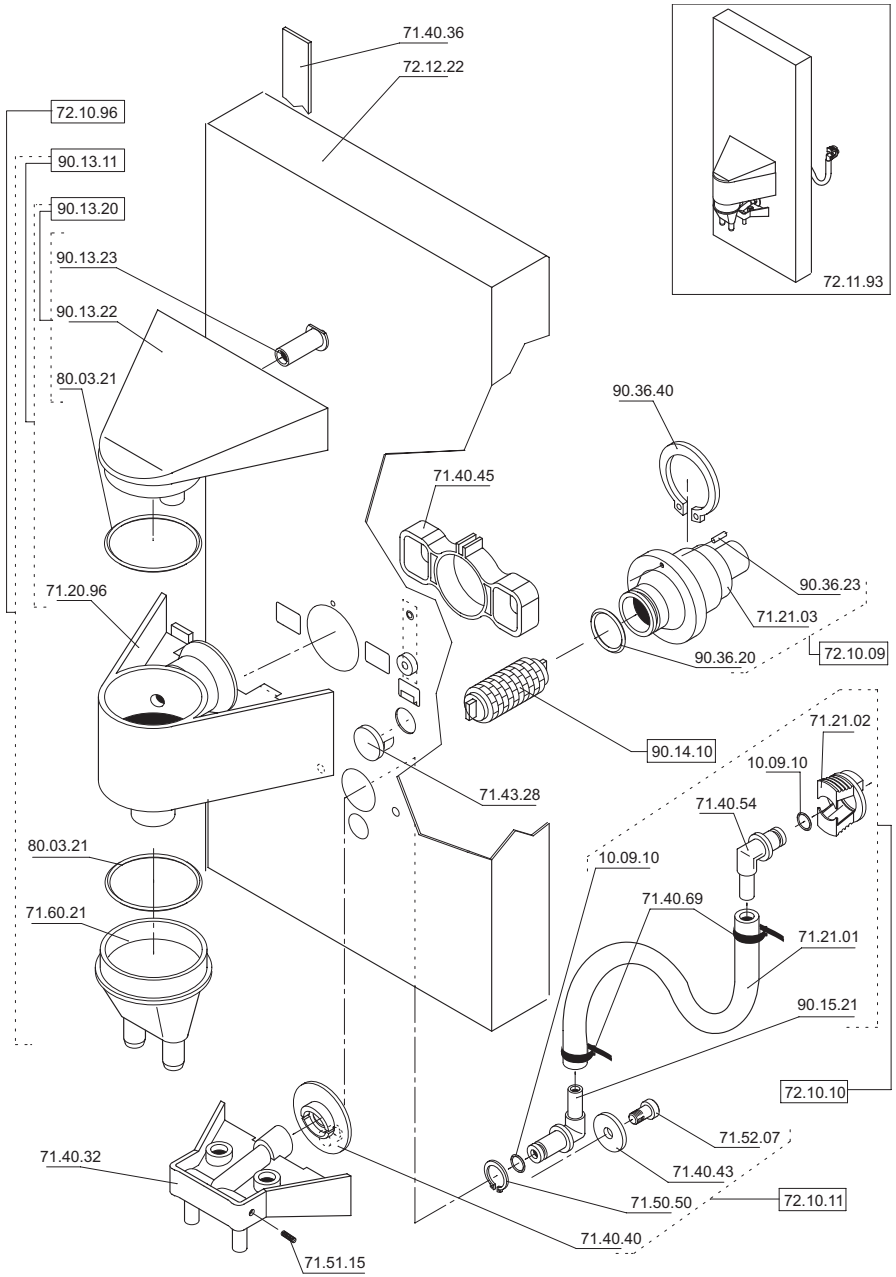

Part No	Description	Quantity
72.12.76	**Coffee-milk outlet simply (security internally), assembly**	**1**
71.40.36	Sliding band 240mm	2
71.40.45	Protection piece	1
90.15.10	offee outlet	1
90.36.40	Circlips ø28	1
72.10.09	**Milk flow, assembly**	**1**
71.21.03	Milk flow ø40x59	1
90.36.20	O-ring ø17x1.5	1
90.36.23	Pin ø2x8	1
72.10.10	**Coffee tube, assembly**	**1**
10.09.10	O-ring ø5x1.5	2
71.21.01	Coffee tube ø4/8x190	1
71.21.02	Securing-clip	1
71.40.54	Connection angle short	1
71.40.69	Tie-wrap 85/22	2
90.15.21	Connection angle	1
71.50.50	Circlips ø11	1
90.13.00	**Foamer head, assembly**	**1**
90.13.10	**Foamer head**	**1**
90.13.20	**Ventilate cover, assembly**	**1**
80.03.21	O-ring ø36x2	1
90.13.22	Ventilate cover	1
90.13.23	Ventilate nozzle	1
72.12.75	**Support plate coffee-milk simply, security internally**	**1**
90.14.10		**1**

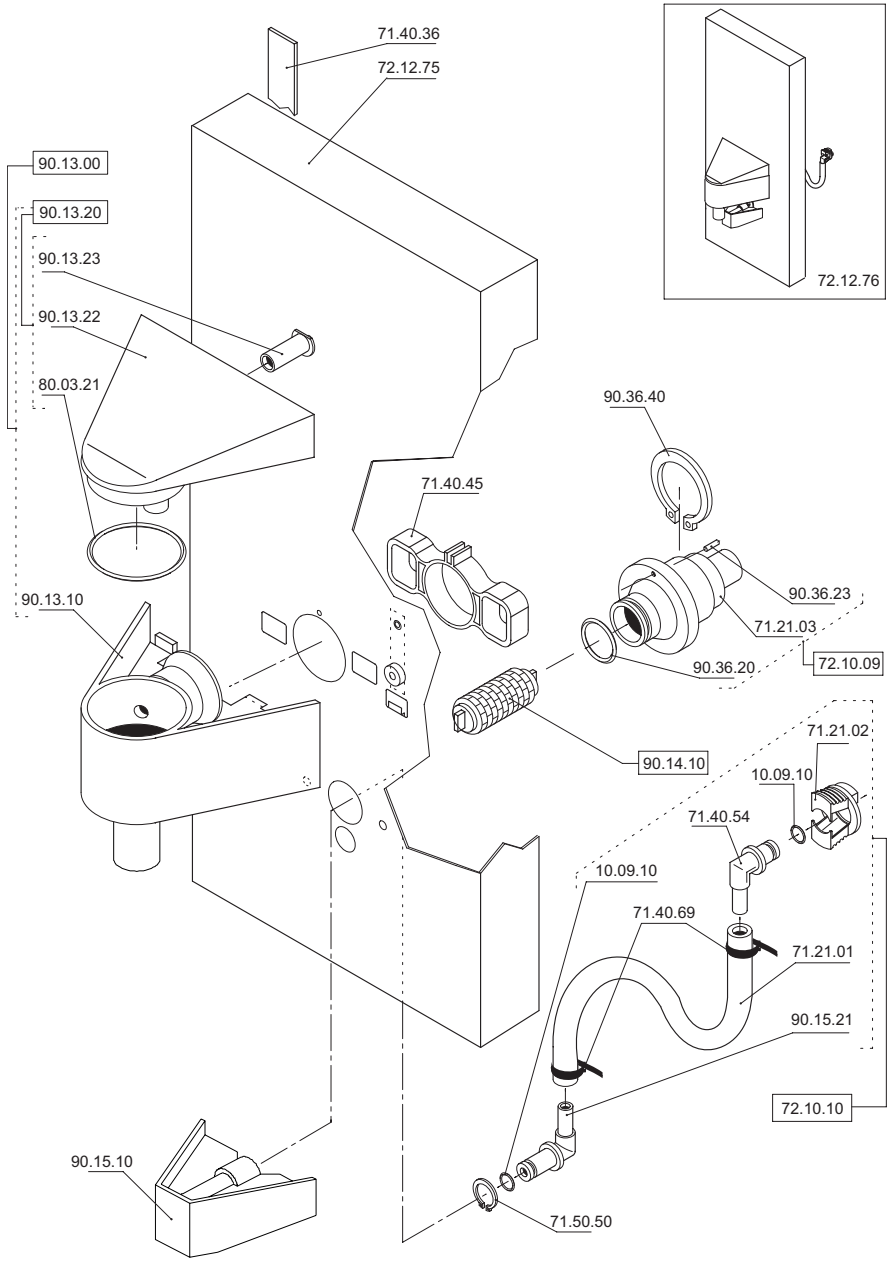

Part No	Description	Quantity
72.80.18	**Coffee-milk outlet undercounter, assembly**	**1**
10.09.10	O-ring ø5x1.5	2
71.00.65	Guide coffee-milk outlet	2
71.11.90	Support plate	1
71.22.00	Connector coffee pipe undercounter	1
71.22.04	Tube ø4/8x300	2
71.22.06	Connection pipe	1
71.31.18	Heating tube undercounter	1
71.40.40	Coffee outlet adapter	1
71.40.43	Washer special	1
71.40.69	Tie-wrap 85/22	4
71.41.33	Milk outlet adapter	1
71.41.36	Tube Polyflex 900mm	1
71.50.50	Circlips ø11	2
71.50.51	Tallow-drop screw KA30x8	2
71.52.07	PT-screw KA 40x8	1
90.15.21	Connection angle	2
72.80.06	**Coffee-milk outlet undercounter**	**1**
71.20.75	Cover for coffee outlet	1
71.40.32	Coffee twin outlet	1
71.51.15	Pin screw M3x6	2
72.80.19	**Milk outlet undercounter, assembly**	**1**
07.35.12	Recessed head screw ø3.5x12	2
71.20.39	O-ring ø9x2	2
71.21.89	Pipe, coffee spout	2
71.21.90	Milk outlet undercounter	1
71.21.91	Stopper 1/8'' undercounter	2
71.21.92	Pipe, milk spout	2
71.21.93		2

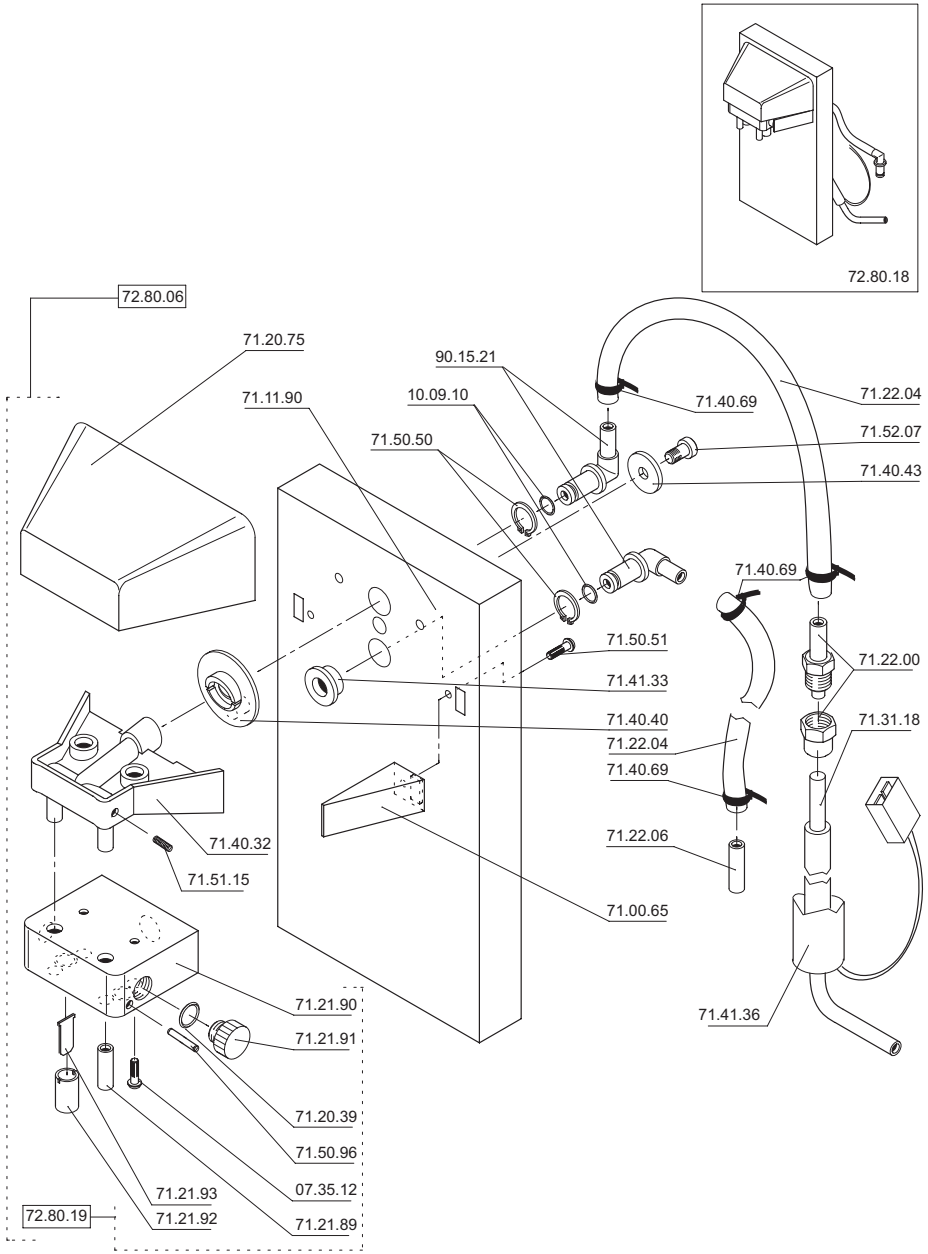

Part No	Description	Quantity
72.80.18	**Coffee-milk outlet undercounter, assembly**	**1**
71.00.65	Guide coffee-milk outlet	2
71.11.90	Support plate	1
71.40.40	Coffee outlet adapter	1
71.40.43	Washer special	1
71.41.33	Milk outlet adapter	1
71.50.50	Circlips ø11	2
71.50.51	Tallow-drop screw KA30x8	2
71.52.07	PT-screw KA 40x8	1
72.80.06	**Coffee-milk outlet undercounter**	**1**
71.20.75	Cover for coffee outlet	1
71.40.32	Coffee twin outlet	1
71.51.15	Pin screw M3x6	2
72.80.19	**Milk outlet undercounter, assembly**	**1**
07.35.12	Recessed head screw ø3.5x12	5
71.20.39	O-ring ø9x2	2
71.21.89	Pipe, coffee spout	2
71.21.91	Stopper 1/8'' undercounter	2
71.21.92	Pipe, milk spout	2
71.21.93	Anti splash	2
72.80.34	**Milk outlet with support plate undercounter, assembly**	**1**
72.80.16	**Coffee tube undercounter, assembly**	**1**
10.09.10	O-ring ø5x1.5	1
71.22.04	Tube ø4/8x300	1
71.23.22	Pressure clip	1
71.28.07	Threaded joint 6-1/8''	1
71.40.69	Tie-wrap 85/22	2
90.15.21	Connection angle	1
72.80.17	**Milk tube undercounter, assembly**	**1**
10.09.10	O-ring ø5x1.5	2
71.22.04	Tube ø4/8x300	1
71.22.06	Connection pipe	1
71.40.69	Tie-wrap 85/22	2
90.15.21	Connection angle	1

71.31.18	Heating tube undercounter	1
71.44.77		1

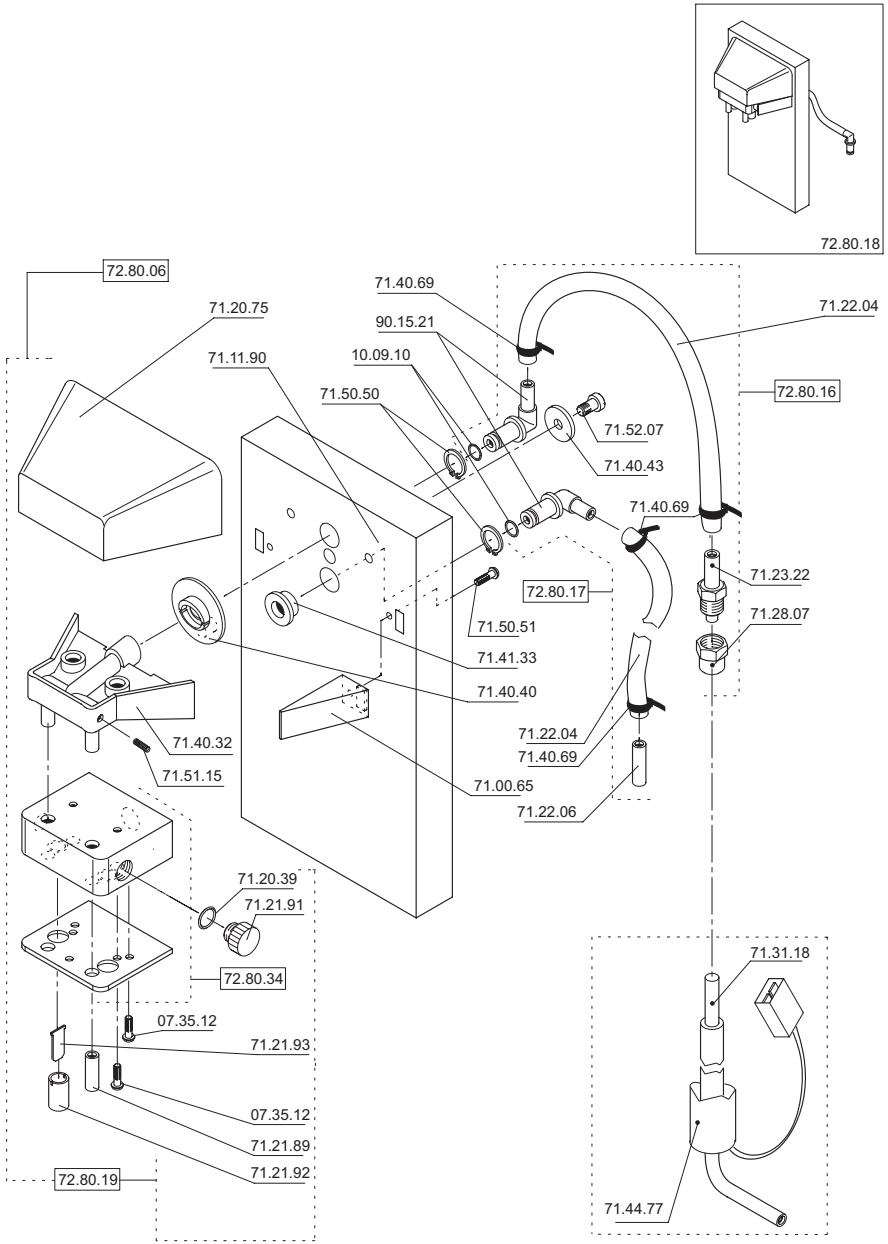

Part No	Description	Quantity
72.10.97	**Support plate coffee-milk V2 easy, assembly**	**1**
72.12.21	Support plate coffee-milk with Security lock	1
71.40.32	Coffee twin outlet	1
71.40.36	Sliding band 240mm	2
71.40.45	Protection piece	1
90.14.00	Resistor long, assembly	1
90.36.40	Circlips ø28	1
72.10.83	**Milch tube easy, assembly**	**1**
10.09.10	O-ring ø5x1.5	1
71.21.02	Securing clip	1
71.21.21	Milch tube ø4/8x340mm	1
71.21.25	Protection tube for milch tube easy	1
91.21.30	Connection nipple straight	1
72.10.94	**Milch flow long, assembly**	**1**
71.60.18	Milch flow long	1
90.36.20	O-ring ø17x1.5	1
90.36.23	Pin ø2x8	1
72.10.10	**Coffee tube, assembly**	**1**
10.09.10	O-ring ø5x1.5	2
71.21.01	Coffee tube ø4/8x190	1
71.21.02	Securing clip	1
71.40.54	Connection angle short	1
90.15.21	Connection angle	1
72.10.11	**Outlet adapter, assembly**	**1**
71.40.40	Coffee outlet adapter	1
71.40.43	Washer special	1
71.50.50	Circlips ø11	1
71.52.07	PT-screw KA 40x8	1
72.10.96	**Foamer head, assembly**	**1**
71.60.21	Foamer head	1
80.03.21	O-ring ø36x2	1
90.13.11	**Foamer head, assembly**	**1**
71.20.96	**Foamer head for coffee-machine**	**1**
90.13.20	**Ventilate cover, assembly**	**1**
80.03.21	O-ring ø36x2	1
90.13.22	Ventilate cover	1
90.13.23		1

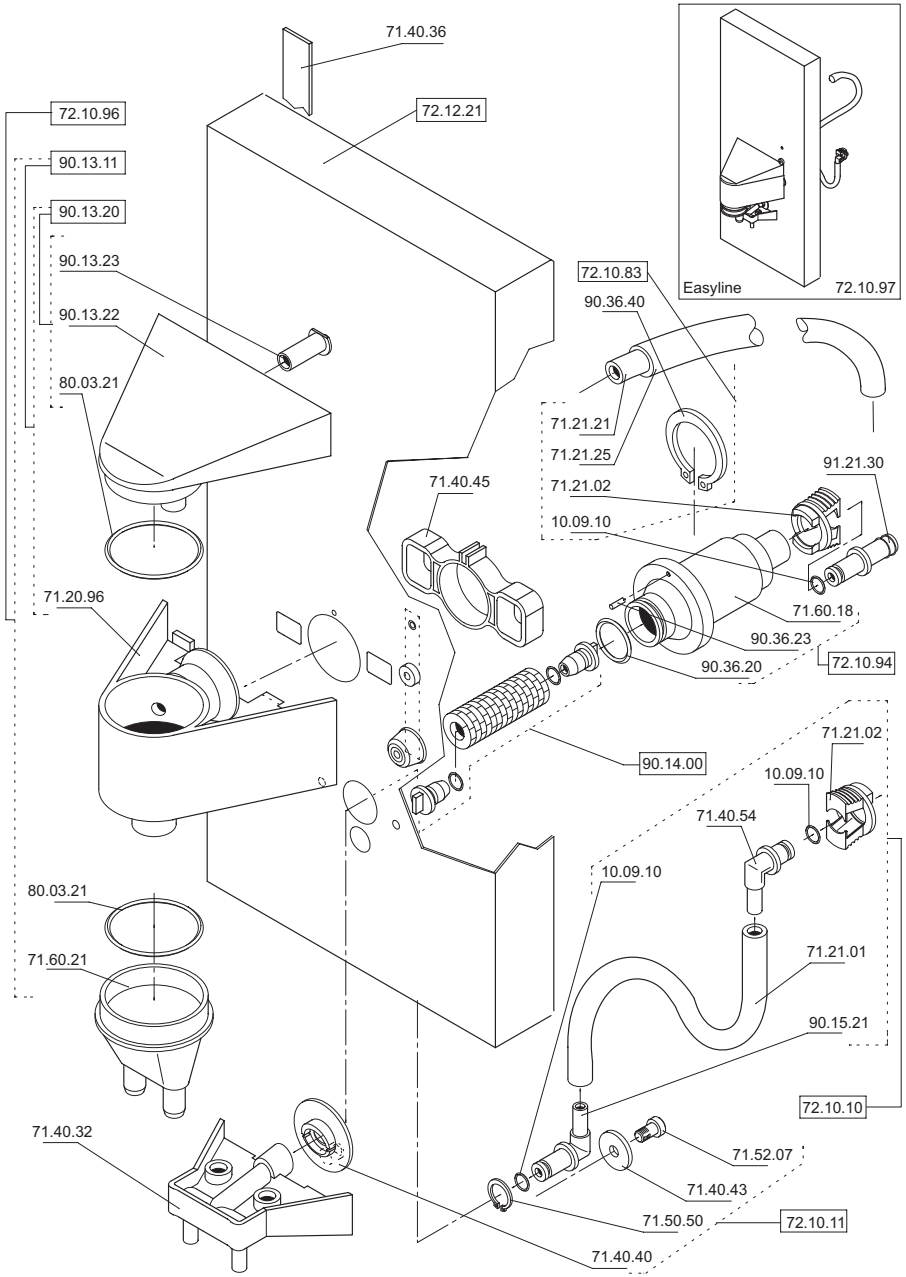

Part No	Description	Quantity
72.13.20	**Coffee-Milk-Tee outlet, assembly**	**1**
72.13.78	coffee-milk-tee outlet, with Security lock	1
71.20.0211	Anti splash piece (short)	1
71.20.0212	Tea outlet self-service	1
71.20.0213	Coffee outlet self-service (double)	1
71.20.23	Threaded elbow joint 4-1/8"	1
71.40.36	Sliding band 240mm	2
71.40.37	cable bushing tub feeler	1
71.40.45	Protection piece	1
71.43.28	Covering plate ø15-17.5	1
71.51.15	Slotted set screw M3x6	2
90.36.40	Circlip for shaft ø28	1
72.10.09	**Milk flow, assembly**	**1**
71.21.03	Milk flow ø40x59	1
90.36.20	O-ring ø17x1.5	1
90.36.23	Pin ø2x8	1
72.10.10	**Coffee tube, assembly**	**1**
10.09.10	O-ring ø5x1.5	2
71.21.01	Coffee tube ø4/8x190	1
71.21.02	Securing-clip	1
71.40.54	Connection angle short	1
71.40.69	Tie-wrap 85/22	2
90.15.21	Connection angle	1
72.10.11	**Outlet adapter, assembly**	**1**
71.40.40	Coffee outlet adapter	1
71.40.43	Washer special	1
71.50.50	Circlips ø11	1
71.52.07	PT-screw KA 40x8	1
72.10.96	**Foamer head V2, assembly**	**1**
71.60.21	Milk double outlet	1
80.03.21	O-ring ø36x2	1
90.13.11	**Foamer head twin outlet, assembly**	**1**
71.20.96	**Foamer head for coffee-machine**	**1**
90.13.20	**Ventilate cover, assembly**	**1**
80.03.21	O-ring ø36x2	1
90.13.22	Ventilate cover	1
90.13.23	Ventilate nozzle	1
90.14.10	**Restistor short, assembly**	**1**

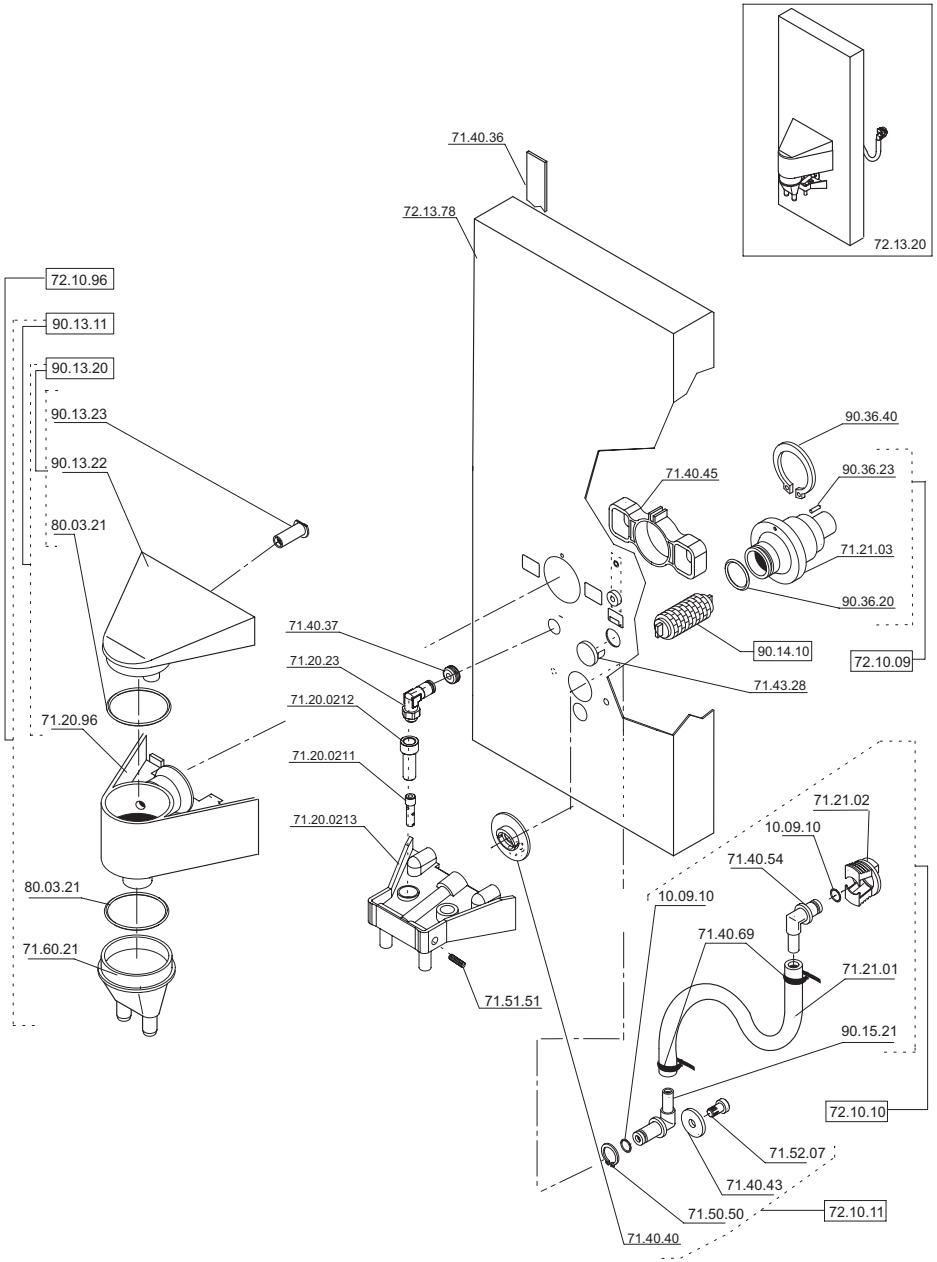

4. Chassis

			Page	Revision	
				List	Drawing
Chassis	CT		4.1.1 / 4.1.2	REV.4	REV.4
Chassis	CT	undercounter	4.2.1 / 4.2.2	REV.4	REV.4
Chassis	CTM / CTS3.0kW		4.3.1 / 4.3.2	REV.4	REV.4
Chassis	CTM / CTS4.2kW		4.3.3 / 4.3.4	REV.4	REV.4
Chassis	CTM / CTS	undercounter	4.4.1 / 4.4.2	REV.4	REV.4
Chassis	CTMF5-T		4.5.1 / 4.5.2	REV.4	REV.4
Chassis	CB		4.6.1 / 4.6.2	REV.4	REV.4
Chassis	CH		4.7.1 / 4.7.2	REV.4	REV.4
Chassis	TS	without sensor	4.8.1 / 4.8.2	REV.4	REV.4
Chassis	TS	with sensor	4.8.3 / 4.8.4	REV.4	REV.4
Chassis	T-unit		4.8.5 / 4.8.6	REV.4	REV.4
Chassis	CT / CTM / CTS / CTMS	easyline	4.9.1 / 4.9.2	REV.4	REV.4
Backwall	TS / T-unit		4.10.1 / 4.10.2	REV.4	REV.4

Part No	Description	Quantity
04.04.00	Nut M4	6
71.00.04	Command module guide	2
71.10.38	Protection panel for hydraulic module	1
71.11.25	Protection plate	1
71.21.62	Tube ø7/10x350	1
71.30.21	Line cord coffe SCHUKO	1
71.30.35	Terminal block 3P 16A	1
71.30.83	Reed-Sensor	1
71.30.95	Wiring harness CT	1
71.30.97	Power deck B&W CT	1
71.31.00	Triac CT*	1
71.31.03	Strain relief CT	1
71.31.24	Line cord USA CT/CTM without connector UL AWG1	1
71.32.42	Line cord UK 3x1.5x2m	1
71.40.02	Bolt M5x5	4
71.40.70	Reinforced water pipe ø3/8''x1.5m	1
71.40.71	Drain tube 2.5m	1
71.41.41	Pipe ø6x12	4
71.41.89	Sliding band 520mm	2
71.50.04	Cheese head screw M4x8	4
71.50.11	Oval head screw M3x8	2
71.50.15	Oval head screw M4x8	2
71.50.17	Countersunk screw M5x14	4
71.50.24	Security washer M4	2
71.50.38	Knurled screw M4x10	2
71.50.48	Knurled nut M6	1
71.50.49	Knurled nut M4	2
71.50.85	Washer ø4.3/14x0.8	4
71.22.49	Seal ø15x9.5x2 for reinforced water pipe	1
72.10.04	**Tap assembly**	**1**
72.10.05	**Cold water connector, assembly**	**1**
72.10.06	**Mounting block assembly for mechanical**	**1**
72.10.07	**Handle for mill**	**1**
72.10.16	**Bracket**	**1**
71.20.44	Drain connection	1
71.40.61	Washer ø16x5	2
71.50.42	Tallow drop screw ø4x16	2
72.10.30	**Rubber foot, assembly**	**4**
72.10.33	**Frame CT**	**1**
72.30.03		**1**

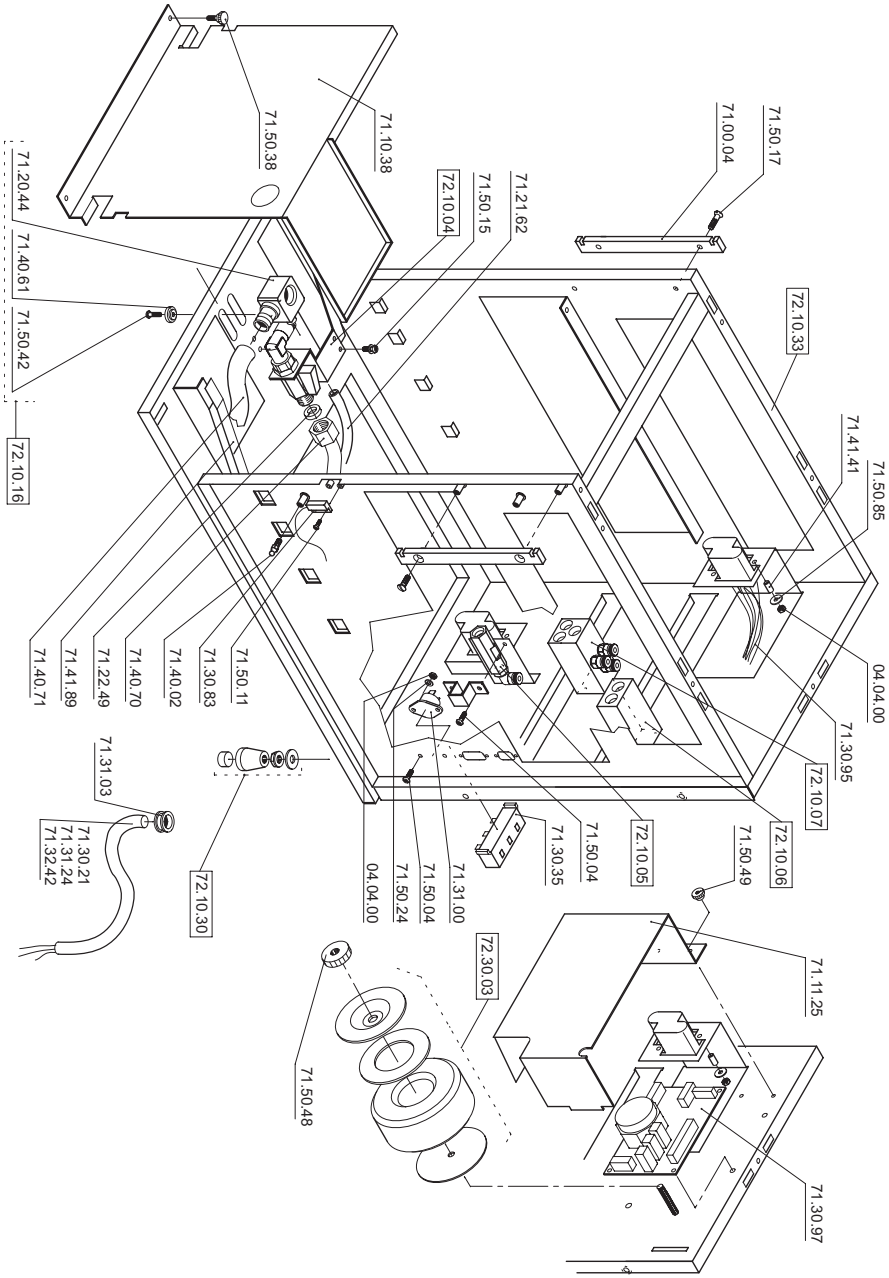

Part No	Description	Quantity
04.04.00	Nut M4	4
10.16.00	Main switch with lens, red	1
71.10.38	Protection panel for hydraulic unit	1
71.11.25	Protection plate	1
71.11.82	Main switch holder	1
71.11.83	Guide undercounter	2
71.21.62	Tube ø7/10x350	1
71.22.49	Seal ø15x9.5x2 for reinforced water pipe	1
71.30.21	Line cord coffe SCHUKO	1
71.30.35	Terminal block 3P 16A	1
71.30.78	Faston 45°	1
71.30.83	Reed-Sensor	1
71.30.95	Wiring harness CT	1
71.30.97	Power deck B&W CT	1
71.31.00	Triac CT	1
71.31.03	Strain relief CT	1
71.31.22	Line cord with connector 3x2.5mm²	1
71.32.42	Line cord UK 3x1.5mm²x2m	1
71.34.09	Extension cord reed-sensor	1
71.40.02	Bolt M5x5	4
71.40.47	Connection	2
71.40.70	Reinforced water pipe ø3/8”x1.5m	1
71.41.41	Pipe ø6x12	2
71.41.89	Sliding band 520mm	2
71.50.01	Securing nut M8	2
71.50.04	Cheese head screw M4x8	2
71.50.11	Oval head screw M3x8	2
71.50.15	Oval head screw M4x6	2
71.50.24	Security washer M4	2
71.50.38	Knurled screw M4x10	2
71.50.49	Knurled nut M4	2
71.50.70	Securing nut M5	2
71.50.75	Hexagon head cap screw M6x50	1
71.50.82	Hexagon head cap screw M8x70	2
71.50.85	Washer ø4.3/14x0.8	2
71.50.84	Blindrivet ø4x8.5	1
72.10.05	**Cold water connector, assembly**	**1**
72.10.06	**Mounting block assembly for mechanical**	**1**
72.10.07	**Handle for mill**	**1**
72.10.30	**Rubber foot, assembly**	**2**
72.30.03	**Transformer 130 VA, assembly**	**1**
72.80.22	**Rubber foot undercounter, assembly**	**2**
72.11.88		**1**

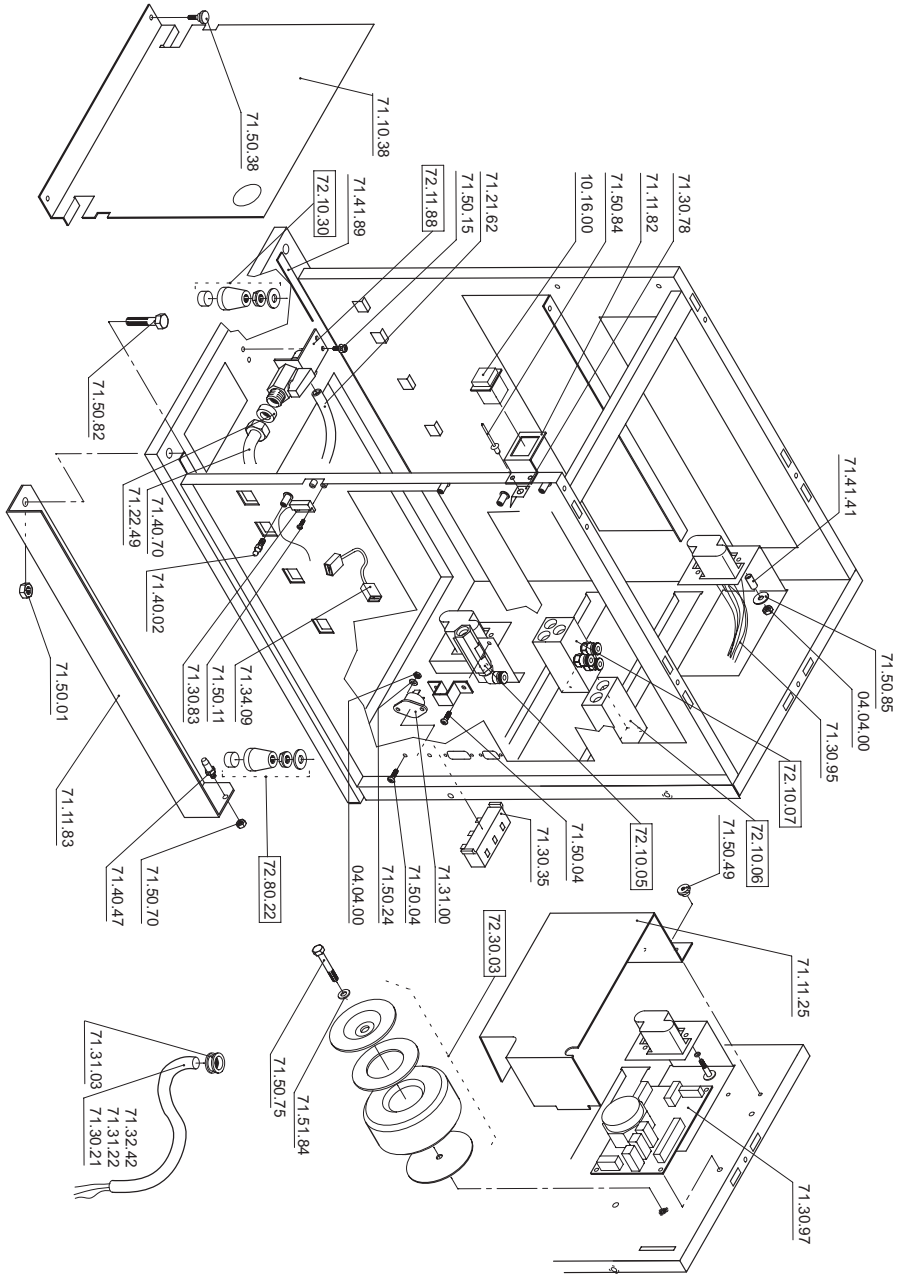

Part No	Description	Quantity
72.10.44	**Frame CTM/CTS, assembly**	**1**
04.04.00	Nut M4	8
71.00.04	Command module guide	2
71.00.17	Spacer ø8.5x3.5	2
71.10.38	Protection panel for hydraulic module	1
71.10.57	Reinforcing piece	1
71.22.49	Seal ø15x9.5x2 for reinforced water pipe	1
71.30.21	Line cord coffee SCHUKO	1
71.30.33	Terminal block 5P/40A	1
71.30.40	Cup-Feeler	2
71.30.45	Strain relief CTS 5-Pol	1
71.30.83	Reed sensor	1
71.31.23	Line cord without connector 5x2.5mm²	1
71.31.67	Line cord CE 5x2.5 mm² (CTS 7000W)	1
71.32.44	Wiring harness Chassis CE CTM/CTS	1
71.34.01	Double plug tub feeler	1
71.40.02	Bolt M5x5	4
71.40.37	Cable bushing tub feeler	2
71.40.70	Reinforced water pipe ø3/8''x2.5m	1
71.40.71	Drain tube 2.5m	1
71.40.72	Cable bushing tub feeler Chassis	1
71.40.95	Strain relief SCHUKO cable	1
71.41.41	Pipe ø6x12	8
71.41.89	Sliding band 520mm	2
71.50.04	Cheese head screw M4x8	2
71.50.11	Oval head screw M3x8	2
71.50.17	Countersunk screw M5x14	4
71.50.38	Knurled screw M4x10	2
71.50.85	Washer ø4.3/14x0.8	8
MM.71.18	Flat pin to tub feeler	2
72.10.00	**Frame CTM/CTS**	**1**
72.10.04	**Tab, assembly**	**1**
72.10.05	**Cold water connector, assembly**	**1**
72.10.06	**Mounting block assembly for mechanical modul**	**1**
72.10.07	**Mounting block assembly for hydraulic modul**	**1**
72.10.16	**Drain connection, assembly**	**1**
71.20.44	Drain connection	1
71.40.61	Washer ø16x5	2
71.50.42	Tallow-drop screw ø4x16	2
72.10.30	**Rubber foot, assembly**	**4**
72.10.91	**Frame CTM, assembly**	**1**
71.30.21	Line cord coffee SCHUKO	1
71.31.22	Line cord without connector 3x2.5mm²	1
71.31.23	Line cord without connector 5x1.5mm²	1
71.31.24	Line cord USA CT/CTM wo.com. UL AWG1	1
71.32.42	Line cord UK 3x1.5mm²x 2m	1
71.33.47		1

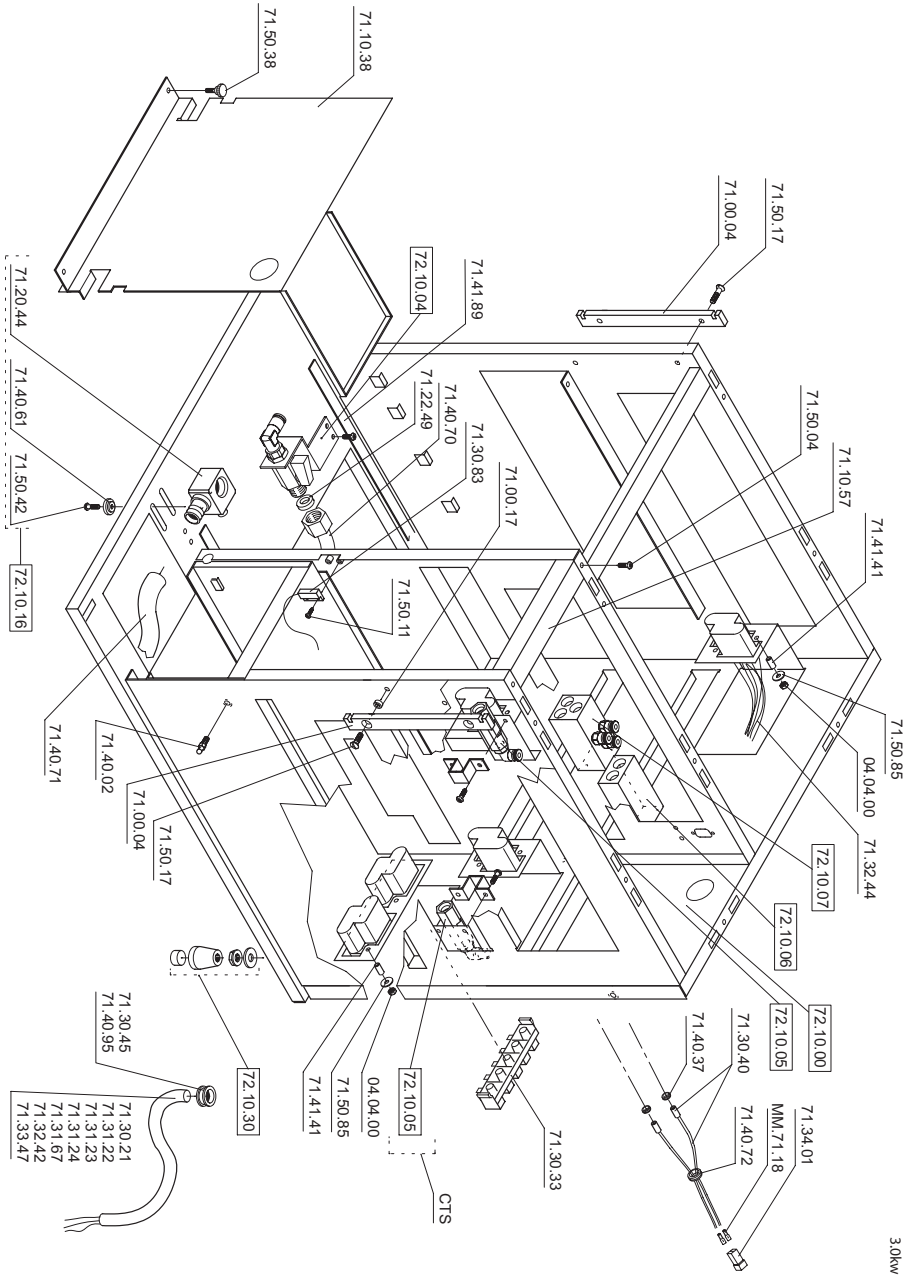

Part No	Description	Quantity
72.10.44	**Frame CTM/CTS, assembly**	**1**
04.04.00	Nut M4	8
71.00.04	Command module guide	2
71.00.17	Spacer ø8.5x3.5	2
71.10.38	Protection panel for hydraulic module	1
71.10.57	Reinforcing piece	1
71.22.49	Seal ø15x9.5x2 for reinforced water pipe	1
71.30.21	Line cord coffee SCHUKO	1
71.30.33	Terminal block 5P/40A	1
71.30.40	Cup-Feeler	2
71.30.45	Strain relief 10.8-12.1x3.2	1
71.30.83	Reed sensor	1
71.31.25	Line cord USA CTS/TS UL AWG10/3	1
71.31.67	Line cord CE 5x2.5 mm² (CTS 7000W)	1
71.32.58	Wiring harness CTS 4.2KW Frame	1
71.32.59	Wiring CTS 4.2KW (Additional)	1
71.34.01	Double plug tub feeler	1
71.40.02	Bolt M5x5	4
71.40.37	Cable bushing tub feeler	2
71.40.70	Reinforced water pipe ø3/8''x2.5m	1
71.40.71	Drain tube 2.5m	1
71.40.72	Cable bushing tub feeler Chassis	1
71.41.78	Strain relief Starbucks	1
71.41.41	Pipe ø6x12	8
71.41.89	Sliding band 520mm	2
71.50.04	Cheese head screw M4x8	2
71.50.11	Oval head screw M3x8	2
71.50.17	Countersunk screw M5x14	4
71.50.38	Knurled screw M4x10	2
71.50.85	Washer ø4.3/14x0.8	8
MM.71.18	Flat pin to tub feeler	2
72.10.00	**Frame CTM/CTS**	**1**
72.10.04	**Tab, assembly**	**1**
72.10.05	**Cold water connector, assembly**	**1**
72.10.06	**Mounting block assembly for mechanical modul**	**1**
72.10.07	**Mounting block assembly for hydraulic modul**	**1**
72.10.16	**Drain connection, assembly**	**1**
71.20.44	Drain connection	1
71.40.61	Washer ø16x5	2
71.50.42	Tallow-drop screw ø4x16	2
72.10.30		**4**

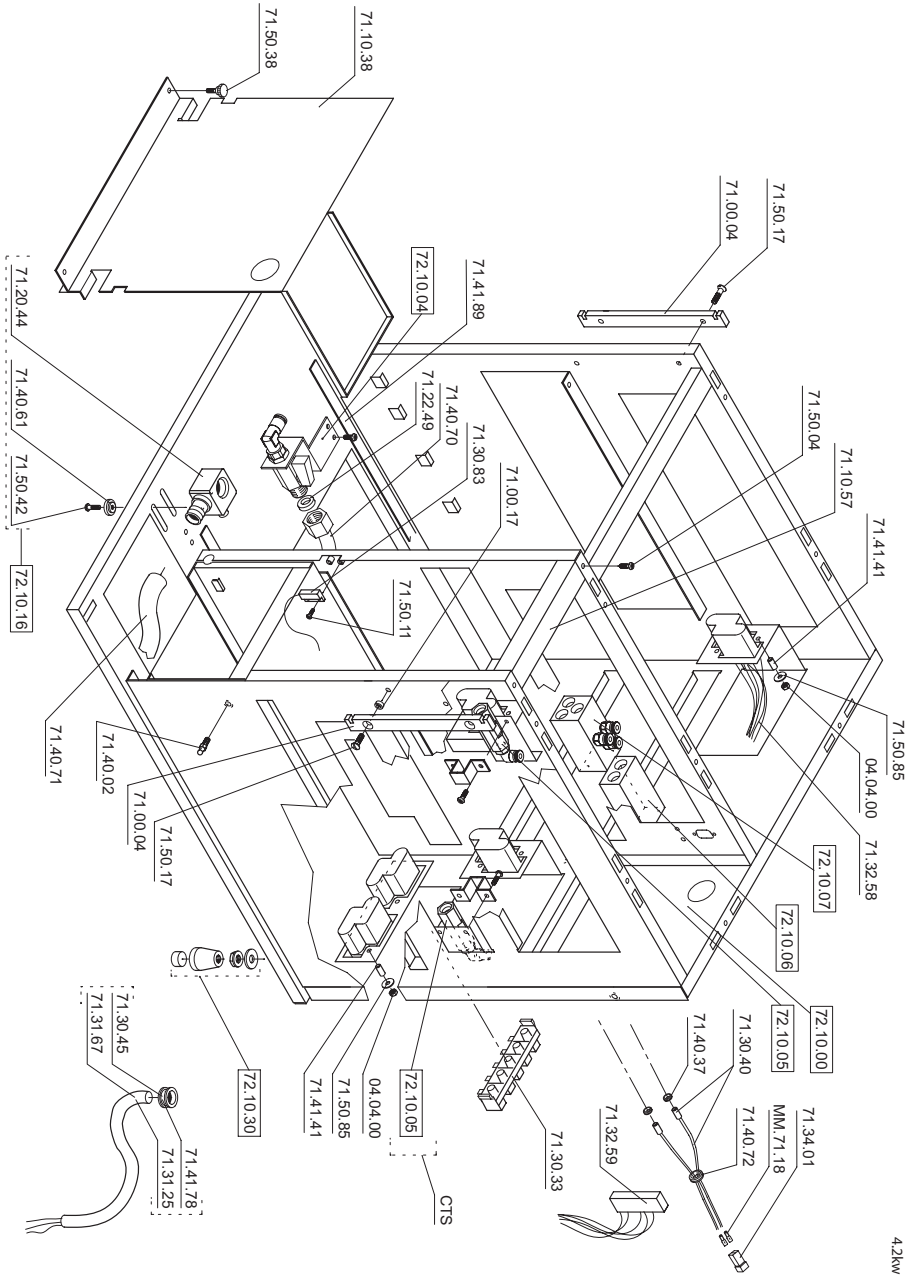

Part No	Description	Quantity
72.80.25	**Frame CTM/CTS undercounter, assembly**	**1**
04.04.00	Nut M4	10
71.10.38	Protection panel for hydraulic module	1
71.10.57	Reinforcing piece	1
71.11.83	Guide undercounter	2
71.21.61	Tube ø7/10x250	1
71.21.62	Tube ø7/10x350	1
71.22.49	Seal ø15x9.5x2 for reinforced water pipe	1
71.30.21	Line cord coffe Schuko	1
71.30.33	Terminal block 5P/40A	1
71.30.83	Reed-Sensor	1
71.31.22	Line cord with connector 3x2.5mm²	1
71.32.42	Line cord UK 3x1.5x2m	1
71.32.44	Wiring harness chassis CTM/CTS	1
71.34.09	Extension cord reed-sensor	1
71.40.02	Bolt M5x5	4
71.40.45	Protection pipe	1
71.40.47	Connection	2
71.40.70	Reinforced water pipe ø3/8''x1.5m	1
71.40.95	Strain relief SCHUKO cable	1
71.41.41	Pipe ø6x12	10
71.41.89	Sliding band 520mm	2
71.50.01	Securing nut M8	2
71.50.04	Cheese head screw Phillips M4x8	4
71.50.11	Oval head screw M3x8	2
71.50.15	Oval head screw M4x6	2
71.50.38	Knurled screw M4x10	2
71.50.70	Securing nut M5	2
71.50.82	Hexagon head cap screw M8x70	2
71.50.85	Washer ø4.3/14x0.8	10
72.10.05	**Cold water connector, assembly**	**2**
72.10.06	**Mounting block assembly for mechanical**	**1**
72.10.07	**Handle for mill**	**1**
72.10.30	**Rubber foot, assembly**	**2**
72.11.88	**Tap, assembly**	**1**
72.80.22		**2**

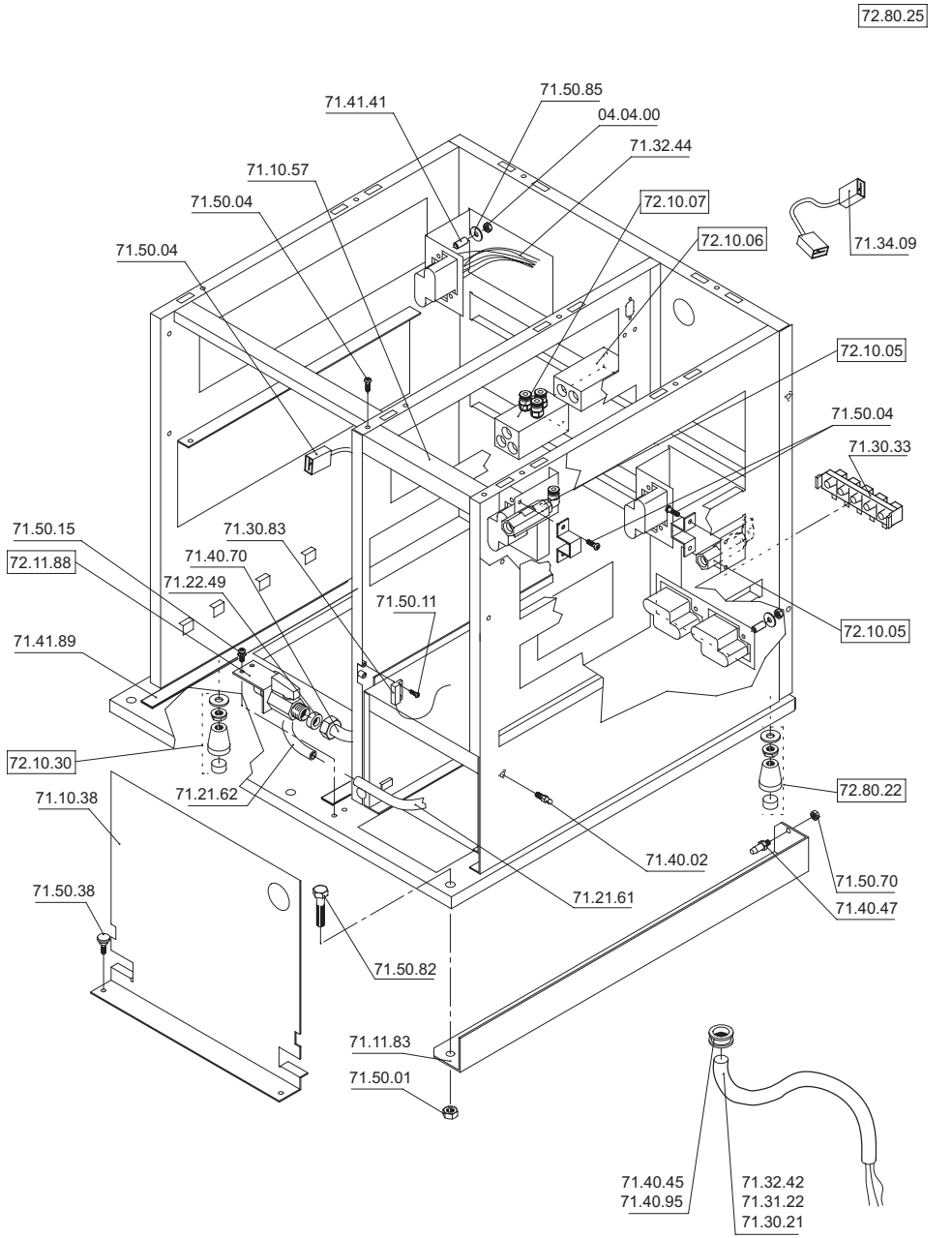

Part No	Description	Quantity
04.04.00	Nut M4	6
71.00.04	Command module guide	2
71.10.38	Protection panel for hydraulic module	1
71.11.25	Protection-plate	1
71.21.62	Tube ø7/10x350	1
71.22.49	Seal ø15x9.5x2 for reinforced water pipe	1
71.26.82	Reinforced water pipe ø3/8''x0.7m	1
71.30.21	Line cord coffee SCHUKO	1
71.30.35	Terminal block 3P 16A	1
71.30.83	Reed sensor	1
71.30.97	Power deck B&W CT	1
71.31.00	Triac CT	1
71.31.03	Strain relief CT	1
71.32.42	Line cord UK 3x1.5mm²x2m	1
71.34.15	Wiring harness CT-MF5T	1
71.40.02	Bolt M5x5	4
71.41.41	Pipe ø6x12	4
71.41.89	Sliding band 520mm	2
71.50.04	Cheese head screw Phillips M4x8	4
71.50.11	Oval head screw M3x8	6
71.50.15	Oval head screw M4x8	2
71.50.17	Countersunk screw M5x14	4
71.50.24	Security washer M4	2
71.50.38	Knurled screw M4x10	2
71.50.48	Knurled nut M6	1
71.50.49	Knurled nut M4	2
71.50.85	Washer ø4.3/14x0.8	4
72.10.05	**Cold water connector, assembly**	**1**
72.10.06	**Mounting block assembly for mechanical module**	**1**
72.10.07	**Mounting block assembly for hydraulic module**	**1**
72.10.16	**Drain connection, assembly**	**1**
71.20.44	Drain connection	1
71.40.61	Washer ø16x5	2
71.50.42	Tallow-drop screw ø4x16	2
72.10.30	**Rubber foot, assembly**	**4**
72.10.33	**Frame CT**	**1**
72.21.17	**Supply of water CT-MF5T, assembly**	**1**
72.21.32	**Drain tube CT-MF5T, assembly**	**1**
72.30.03		**1**

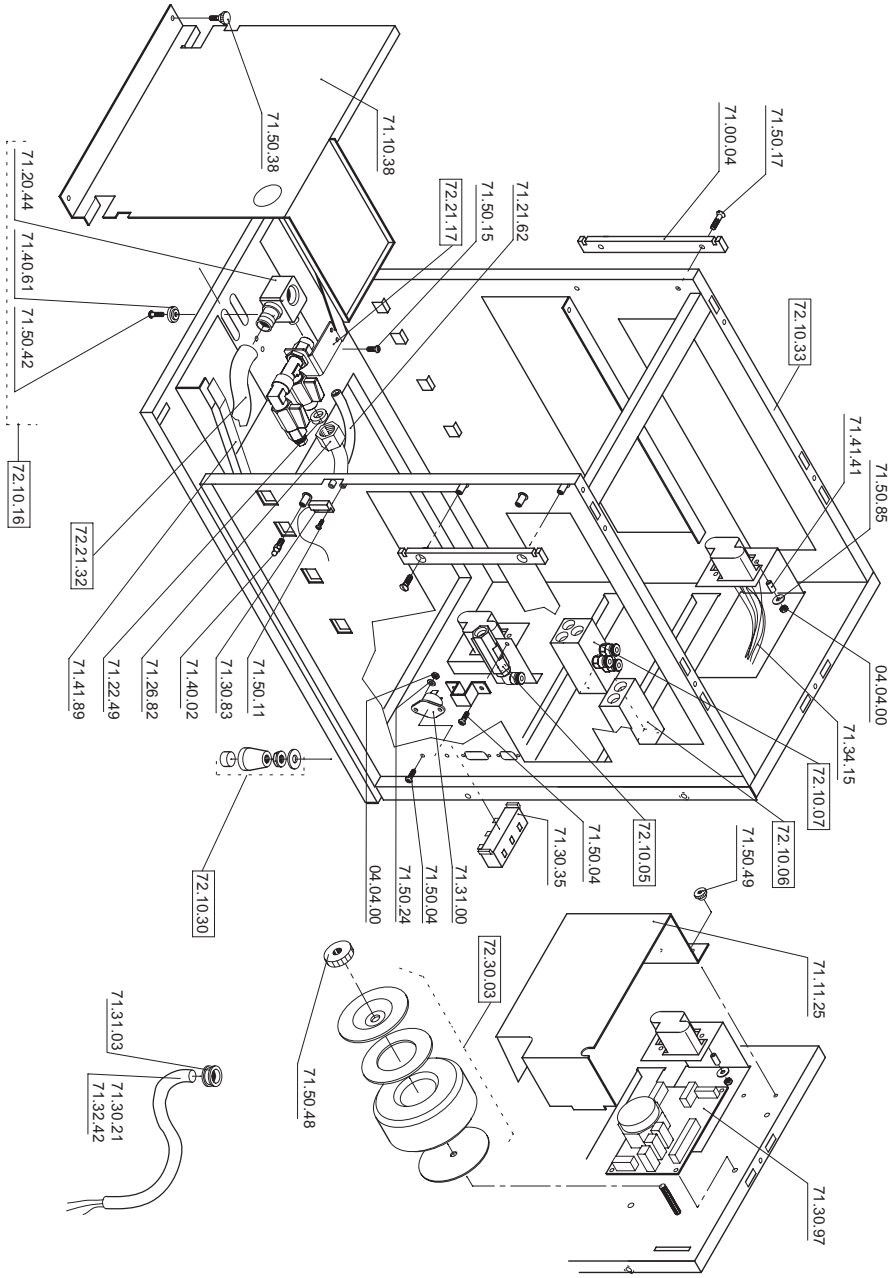

Part No	Description	Quantity
72.45.19	**Frame CB, assembly**	**1**
04.04.00	Nut M4	8
71.00.04	Command module guide	2
71.00.17	Spacer ø8.5x3.5	2
71.10.38	Protection panel for hydraulic modul	1
71.10.57	Reinforcing piece	1
71.22.49	Seal ø15x9.5x2 for reinforced water pipe	1
71.30.21	Line cord coffee SCHUKO	1
71.30.35	Terminal block 3P 16A	1
71.30.40	Cup-Feeler	2
71.30.83	Reed sensor	1
71.31.23	Line cord without connector 5x2.5mm²	1
71.31.24	Line cord USA CT/CTM	1
71.32.42	Line cord UK 3x1.5mm²x2m	1
71.32.44	Wiring harness Chassis CE CTM/CTS	1
71.33.47	Line cord AWG 12/3 without connector 2m	1
71.34.01	Double plug tub feeler	1
71.40.02	Bolt M5x5	4
71.40.37	Cable bushing tub feeler	2
71.40.70	Reinforced water pipe ø3/8''x2.5m	1
71.40.71	Drain tube 2.5m	1
71.40.72	Cable bushing tub feeler Chassis	1
71.40.95	Strain relief SCHUKO cable	1
71.41.41	Pipe ø6x12	8
71.41.89	Sliding band 520mm	2
71.50.04	Cheese head screw M4x8	2
71.50.11	Oval head screw M3x8	2
71.50.17	Countersunk screw M5x14	4
71.50.38	Knurled screw M4x10	2
71.50.85	Washer ø4.3/14x0.8	8
MM.71.18	Flat pin to tub feeler	2
72.10.00	**Frame CTM/CTS**	**1**
72.10.04	**Tab, assembly**	**1**
72.10.05	**Cold water connector, assembly**	**1**
72.10.06	**Mounting block assembly for mechanical modul**	**1**
72.10.07	**Mounting block assembly for hydraulic modul**	**1**
72.10.16	**Drain connection, assembly**	**1**
71.20.44	Drain connection	1
71.40.61	Washer ø16x5	2
71.50.42	Tallow-drop screw ø4x16	2
72.10.30		**4**

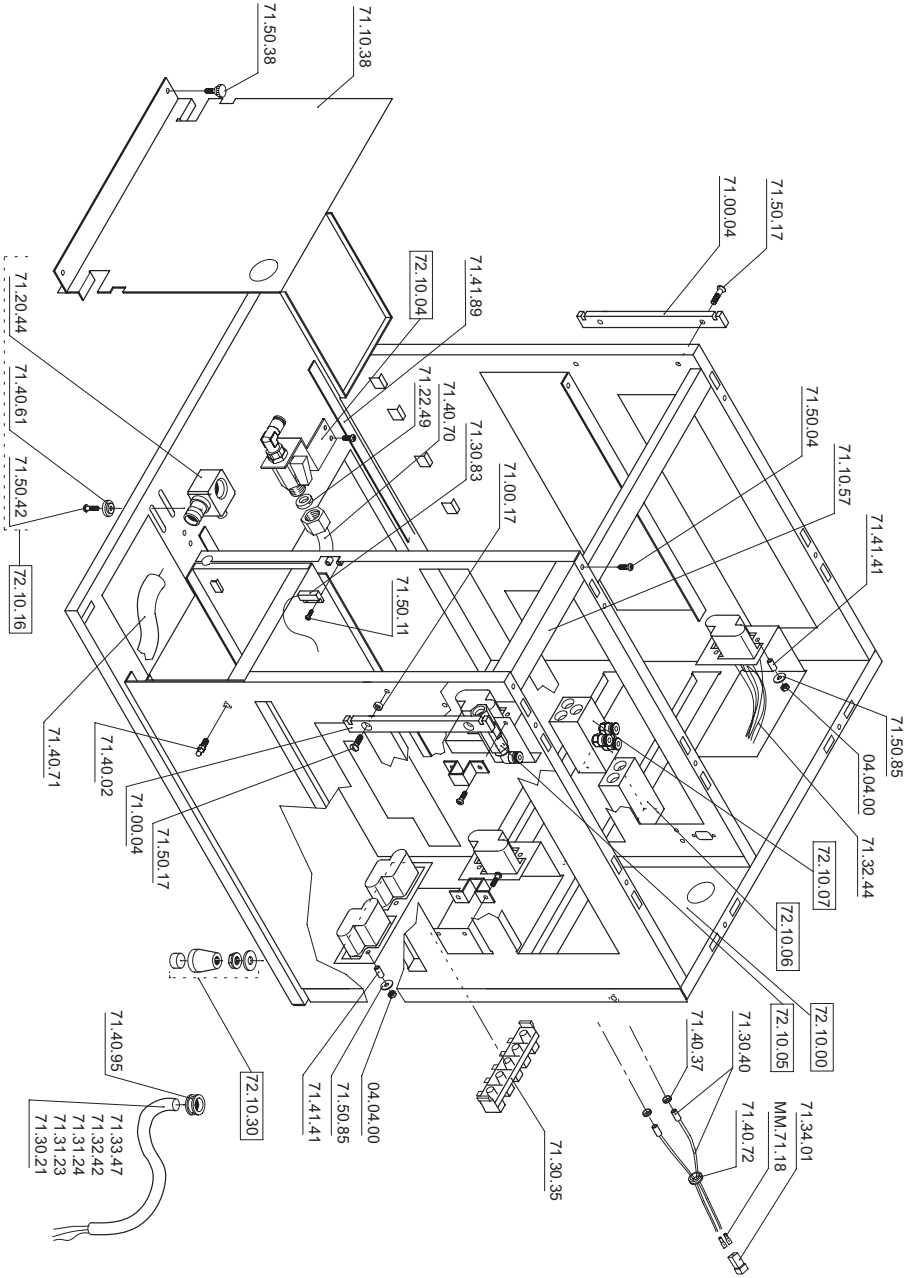

Part No	Description	Quantity
04.05.00	Nut M5	10
10.16.00	Main switch with lens, red	1
71.10.85	Chassis TS-CH	1
71.10.97	Backwall TS-CH	1
71.11.31	Interior wall CH	1
71.11.32	Guide-bar for cup-basket CH	2
71.11.33	Cover CH	1
71.11.34	Cup support CH, grounds	1
71.11.37	Guide plate TS-CH	1
71.11.38	Frame for cup-basket CH	1
71.11.48	Flat for cover CH	1
71.11.49	Cup support CH, top side	1
71.30.21	Line cord coffee SCHUKO	1
71.30.33	Terminal block 5P 40A	1
71.31.07	Heating element CH	1
71.31.08	Bimetal controller CH	1
71.31.09	Wiring harness CH	1
71.32.42	Line cord UK 3x1.5mm²x2m	1
71.32.50	Bush CH	2
71.40.02	Bolt M5x5	4
71.40.30	Quick snap	4
71.40.88	Insulation CH, floor	1
71.40.89	Cup-basket	4
71.40.93	Rubber mounting bush M4	4
71.40.94	Bush CH	2
71.40.95	Strain relief SCHUKO cable	1
71.40.96	Regulating button	1
71.40.99	Cover for screw M5	6
71.41.00	Spring clip to heating CH	6
71.41.01	Fan 230V AC	1
71.41.02	Insulation CH, backwall	1
71.41.03	Insulation CH, U-profile	2
71.41.04	Insulation CH, Fan	1
71.41.05	Insulation CH, thermostat	1
71.41.06	Insulation CH, cover	1
71.50.04	Cheeses head screw M4x8	4
71.50.05	Countersunk screw M4x8	4
71.50.12	Oval head screw M4x16	4
71.50.13	Oval head screw M4x25	1
71.50.62	Countersunk screw M4x25	4
71.50.69	Cheeses head screw M5x12	6
71.50.86	Hexagon head screw M4x10	2
72.10.30	**Rubber foot, assembly**	**4**
72.12.17	**Drainage tray MF/TS/CH, assembly**	**1**
72.10.37	Drainage tray MF/TS/CH	1
72.10.53	Protection piece, assembly	1
71.10.92	Drainage tray grill MF/TS/CH	1
71.20.58		1

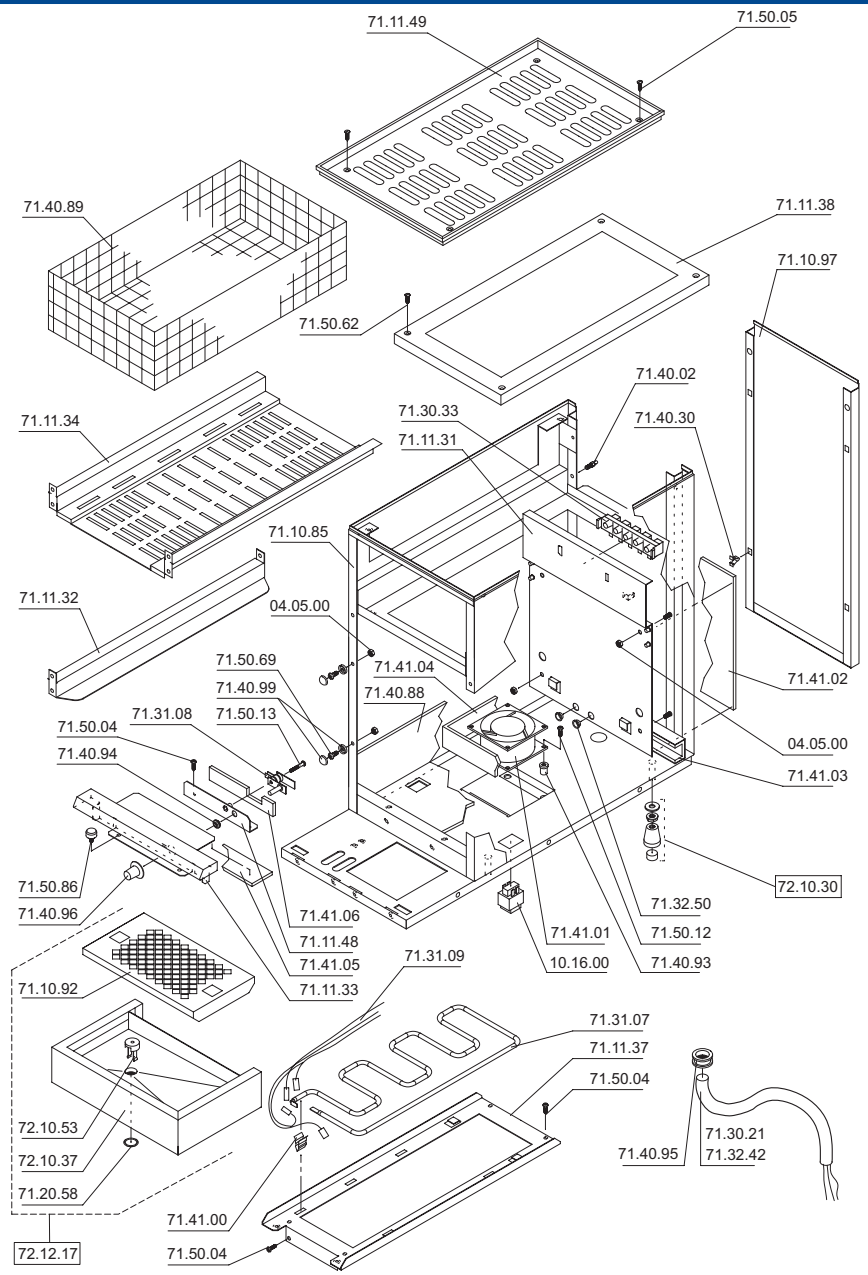

Part No	Description	Quantity
04.03.00	Nut M3	4
04.05.00	Nut M5	10
10.16.00	Maine switch with lens, red	1
71.10.85	Chassis TS/CH	1
71.10.86	Front panel TS	1
71.10.87	Command module TS	1
71.10.97	Backwall TS/CH	1
71.10.98	Cup support TS, below	1
71.10.99	Cup support TS, top side	1
71.11.37	Guide plate TS	1
71.11.62	Protection panel for heater TS	1
71.20.13	Pipe ø8/6x900	1
71.30.21	Line cord coffee SCHUKO	1
71.30.30	Heating element rear CTM/CTS	1
71.30.45	Strain relief CTS 5-Pol	1
71.30.46	Heating cable extension	1
71.30.72	Keyboard-foil TS	1
71.30.91	Flat cable TS 10p, Keyboard-main-print	1
71.31.25	Line cord USA	1
71.31.67	Line cord CE 5x2.5mm²	1
71.31.94	Keyboard TS with dipswitch	1
71.40.02	Bolt M5x5	10
71.40.30	Quick snap	10
71.40.31	Bolt M5x10	2
71.40.70	Reinforced water pipe ø3/8''x1.5m	1
71.40.71	Drain tube 2.5m	1
71.40.89	Cup-basket	1
71.40.95	Strain relief SCHUKO cable	1
71.41.78	Strain relief Starbucks AWG10	1
71.50.04	Cheese head screw M4x8	4
71.50.05	Countersunk screw M4x8	4
71.50.23	Oval head screw M5x6	2
71.50.62	Countersunk screw M4x25	4
71.50.74	Bolt M5x16	2
71.52.86	Spacer M3	4
72.10.04	**Tap, assembly**	**1**
72.10.16	**Drain connection, assembly**	**1**
71.20.44	Drain connection	1
71.40.61	Washer ø16x5	2
71.50.42	Tallow top screw ø4x16	2
72.10.30	**Rubber foot, assembly**	**4**
72.12.17	**Drainage tray MF/TS/CH, assembly**	**1**
72.10.37	Drainage tray MF/TS/CH	1
72.10.53	Protection piece, assembly	1
71.10.92	Drainage tray grill MF/TS/CH	1
71.20.58		1

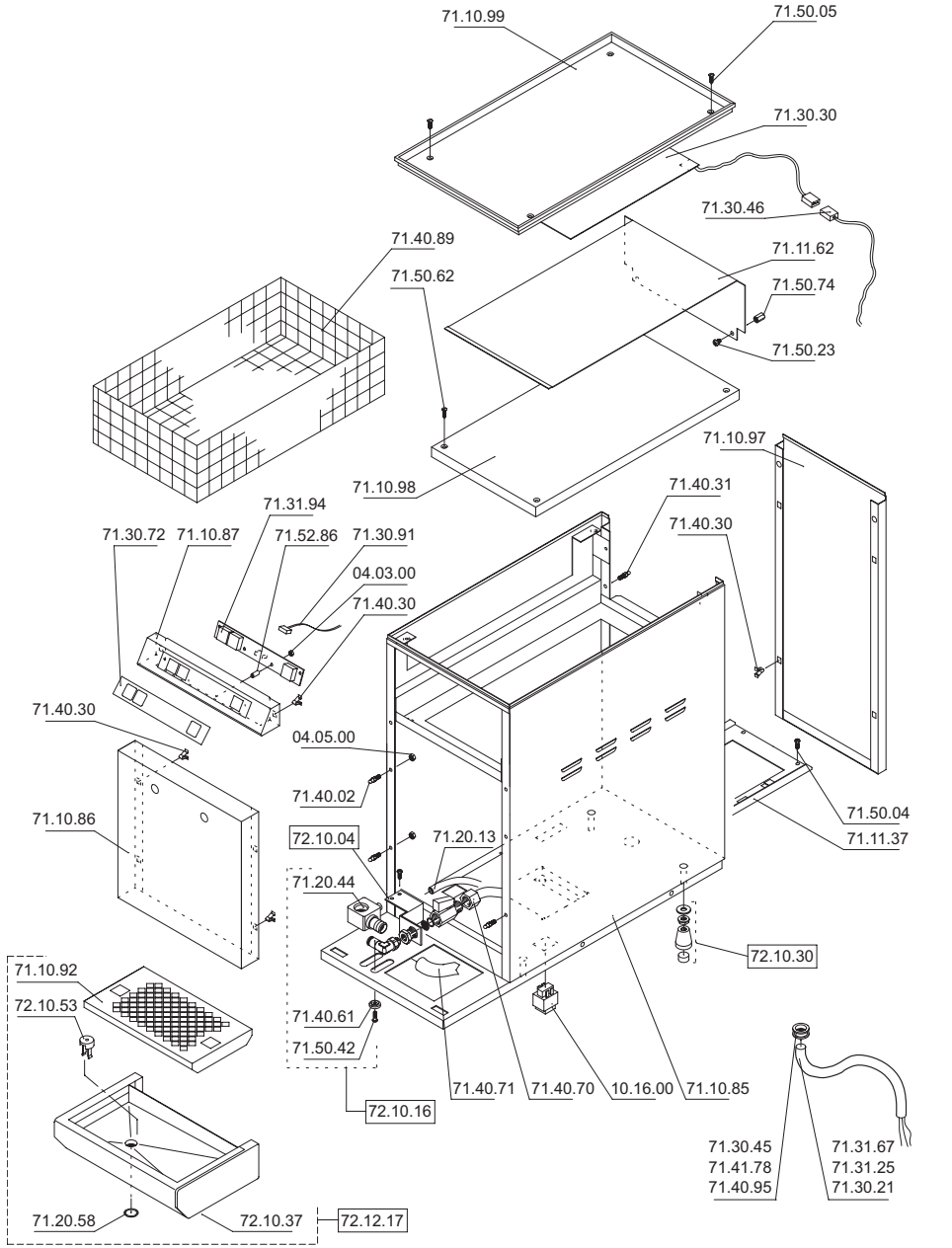

Part No	Description	Quantity
04.03.00	Nut M3	4
04.05.00	Nut M5	10
10.16.00	Maine switch with lens, red	1
71.10.85	Chassis TS/CH	1
71.10.87	Command module TS	1
71.10.92	Drainage tray grill MF/TS/CH	1
71.10.97	Backwall TS/CH	1
71.10.98	Cup support TS, below	1
71.10.99	Cup support TS, top side	1
71.11.37	Guide plate TS	1
71.11.62	Protection panel for heater TS	1
71.12.21	Front panel TS, SB	1
71.20.13	Pipe ø8/6x900	1
71.20.58	O-ring ø14x1.78	1
71.30.21	Line cord coffee SCHUKO	1
71.30.30	Heating element rear CTM/CTS	1
71.30.45	Strain relief CTS 5-Pol	1
71.30.46	Heating cable extension	1
71.30.72	Keyboard-foil TS	1
71.30.91	Flat cable TS 10p, Keyboard-main-print	1
71.31.25	Line cord USA	1
71.31.67	Line cord CE 5x2.5mm²	1
71.31.94	Keyboard TS with dipswitch	1
71.40.02	Bolt M5x5	10
71.40.30	Quick snap	10
71.40.31	Bolt M5x10	2
71.40.70	Reinforced water pipe ø3/8''x1.5m	1
71.40.71	Drain tube 2.5m	1
71.40.89	Cup-basket	1
71.40.95	Strain relief SCHUKO cable	1
71.41.78	Strain relief Starbucks AWG10	1
71.50.04	Cheese head screw M4x8	4
71.50.05	Countersunk screw M4x8	4
71.50.23	Oval head screw M5x6	2
71.50.62	Countersunk screw M4x25	4
71.50.74	Bolt M5x16	2
71.52.86	Spacer M3	4
72.10.04	**Tap, assembly**	**1**
72.10.16	**Drain connection, assembly**	**1**
71.20.44	Drain connection	1
71.40.61	Washer ø16x5	2
71.50.42	Tallow top screw ø4x16	2
72.10.30	**Rubber foot, assembly**	**4**
72.12.17	**Drainage tray MF/TS/CH, assembly**	**1**
72.10.37	Drainage tray MF/TS/CH	1
72.10.53	Protection piece, assembly	1
71.10.92	Drainage tray grill MF/TS/CH	1
71.20.58		1

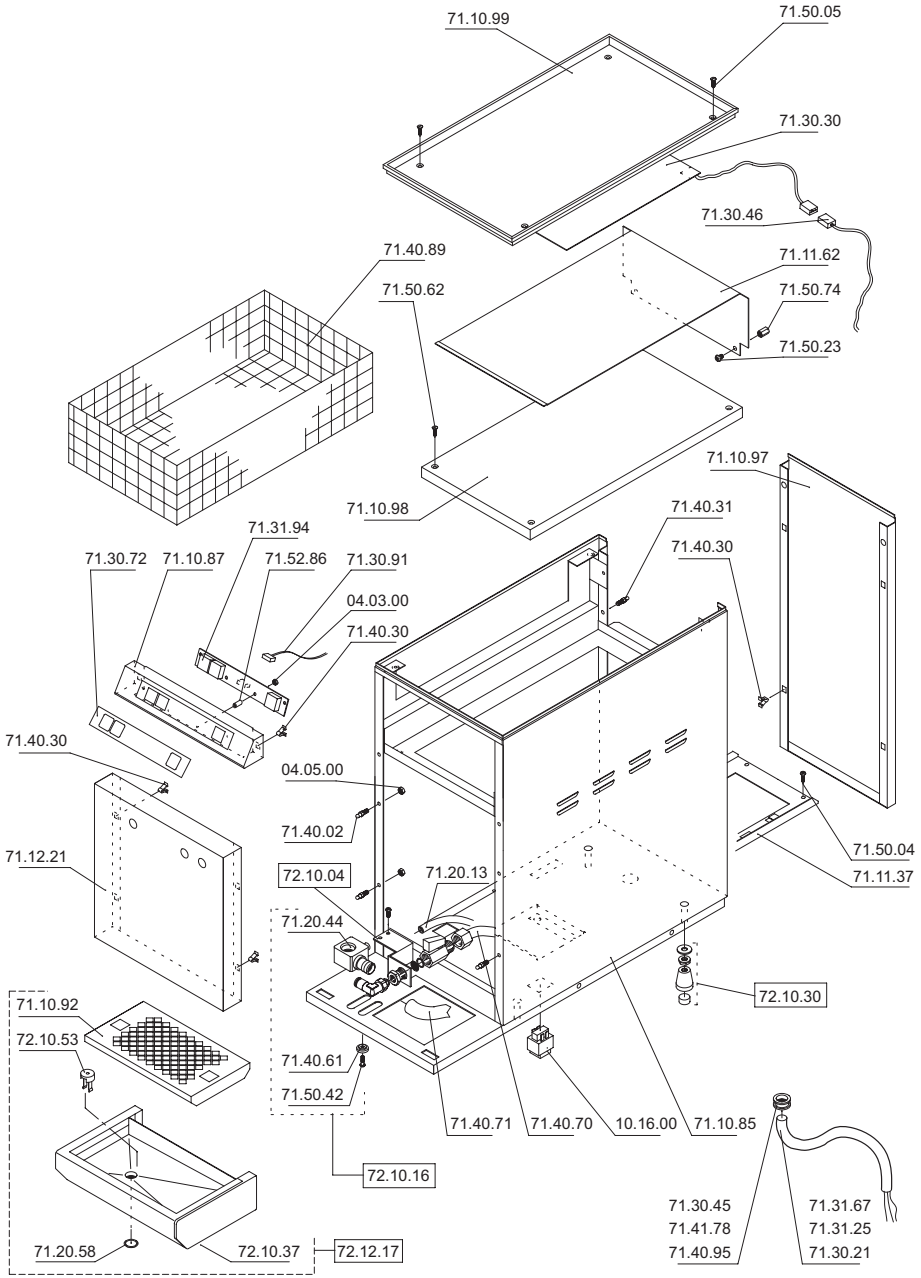

Part No	Description	Quantity
72.13.07	**Chassis T-unit, assembly**	**1**
04.03.00	Nut M3	4
04.05.00	Nut M5	10
10.16.00	Maine switch with lens, red	1
71.10.85	Chassis TS/CH	1
71.10.86	Front panel TS	1
71.10.87	Command module TS	1
71.10.97	Backwall TS/CH	1
71.10.98	Cup support TS, below	1
71.10.99	Cup support TS, top side	1
71.11.37	Guide plate TS	1
71.11.62	Protection panel for heater TS	1
71.20.13	Pipe ø8/6x900	1
71.30.21	Line cord coffee SCHUKO	1
71.30.30	Heating element rear CTM/CTS	1
71.30.46	Heating cable extension	1
71.36.41	Keyboard-foil T-unit	1
71.30.91	Flat cable TS 10p, Keyboard-main-print	1
71.31.94	Keyboard TS with dipswitch	1
71.40.02	Bolt M5x5	10
71.40.30	Quick snap	10
71.40.31	Bolt M5x10	2
71.40.70	Reinforced water pipe ø3/8''x1.5m	1
71.40.71	Drain tube 2.5m	1
71.40.89	Cup-basket	1
71.40.95	Strain relief SCHUKO cable	1
71.41.37	Protection cap ø18.4/20.6	1
71.50.04	Cheese head screw M4x8	4
71.50.05	Countersunk screw M4x8	4
71.50.23	Oval head screw M5x6	2
71.50.62	Countersunk screw M4x25	4
71.50.74	Bolt M5x16	2
71.52.86	Spacer M3	4
72.10.04	**Tap, assembly**	**1**
72.10.16	**Drain connection, assembly**	**1**
71.20.44	Drain connection	1
71.40.61	Washer ø16x5	2
71.50.42	Tallow top screw ø4x16	2
72.10.30	**Rubber foot, assembly**	**4**
72.12.17	**Drainage tray MF/TS/CH, assembly**	**1**
72.10.37	Drainage tray MF/TS/CH	1
72.10.53	Protection piece, assembly	1
71.10.92	Drainage tray grill MF/TS/CH	1
71.20.58		1

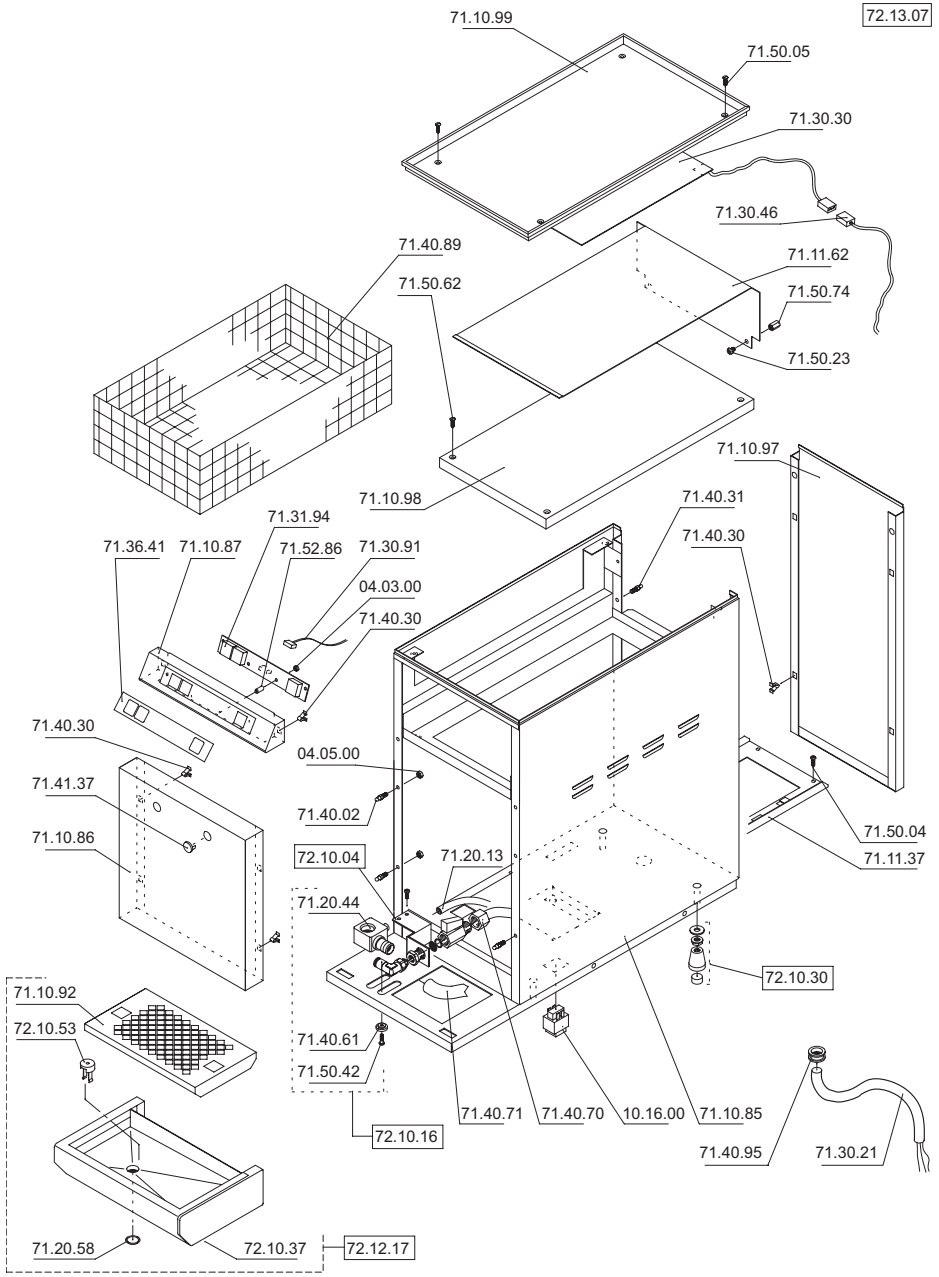

Part No	Description	Quantity
04.04.00	Nut M4	4
71.00.04	Command module guide	2
71.10.38	Protection panel for hydraulic modul	1
71.21.62	Tube ø7/10x300	1
71.30.21	Line cord coffe SCHUKO	1
71.30.35	Terminal block 3P 16A	2
71.30.83	Reed sensor	1
71.31.03	Strain relief CT	1
71.31.52	Distribution terminal HV	2
71.31.77	Wiring hardness frame easy mechanical modul	1
71.31.91	Wiring hardness connection terminal block	1
71.32.07	Wiring hardness frame easy hydraulic modul	1
71.32.08	Wiring hardness frame Trafo easy	1
71.32.42	Bolt M5x5	1
71.33.47	Line cord UK 3x1.5mm²x2m	1
71.40.02	Line cord AWG 12/3 without connector 2m	4
71.40.70	Reinforced water pipe ø3/8"x1.5m	1
71.40.71	Drain tube 2m	1
71.41.41	Pipe ø6x12	4
71.41.89	Sliding band 520mm	2
71.50.15	Phillips screw M4x8 combi	4
71.50.11	Oval head screw M3x8	2
71.50.17	Countersunk screw M5x14	4
71.50.38	Tollow-drop M4x10	2
71.50.48	Knurled nut M6	1
71.50.85	Washer ø4.3/14x0.8	4
72.10.04	**Tap, assembly**	**1**
72.10.05	**Cold water connector, assembly**	**1**
72.10.06	**Mounting block assembly for mechanical**	**1**
72.10.07	**Mounting block assembly for hydraulic**	**1**
72.10.16	**Drain connection, assembly**	**1**
71.20.44	Drain connection	1
71.40.61	Washer ø16 x 5	2
71.50.42	Tollow-drop screw KA 40x16	2
72.10.30	**Rupper foot, assembly**	**4**
72.30.03		**1**

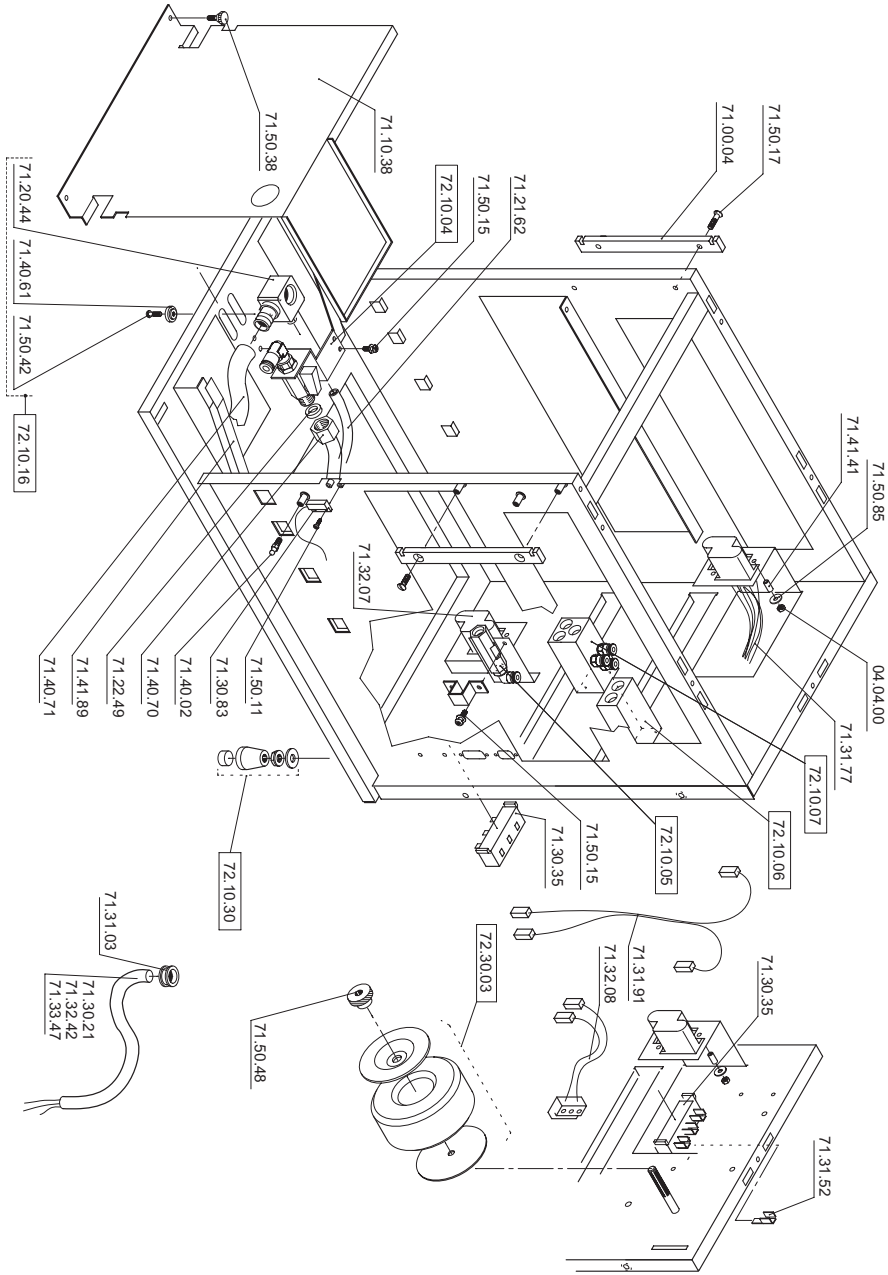

Part No	Description	Quantity
04.05.00	Nut M5	2
71.10.95	Support wall TS	1
71.11.00	Protection plate TS CPU	1
71.30.12	Screw for AMP connector	2
71.30.33	Terminal block 5P 40A	1
71.30.36	Deck support piece	4
71.30.79	Main print TS	1
71.31.87	Wiring herness TS EURO	1
71.32.78	Wiring herness TS 4.2kW	1
71.40.62	Washer for AMP screw	2
71.50.04	Cheeses head screw M4x8	2
71.50.48	Knurled nut M6	1
71.50.49	Knurled nut M4	2
71.50.68	Distance owner M4x50	2
72.10.05	**Cold water connector, assembly**	**1**
72.30.03		**1**

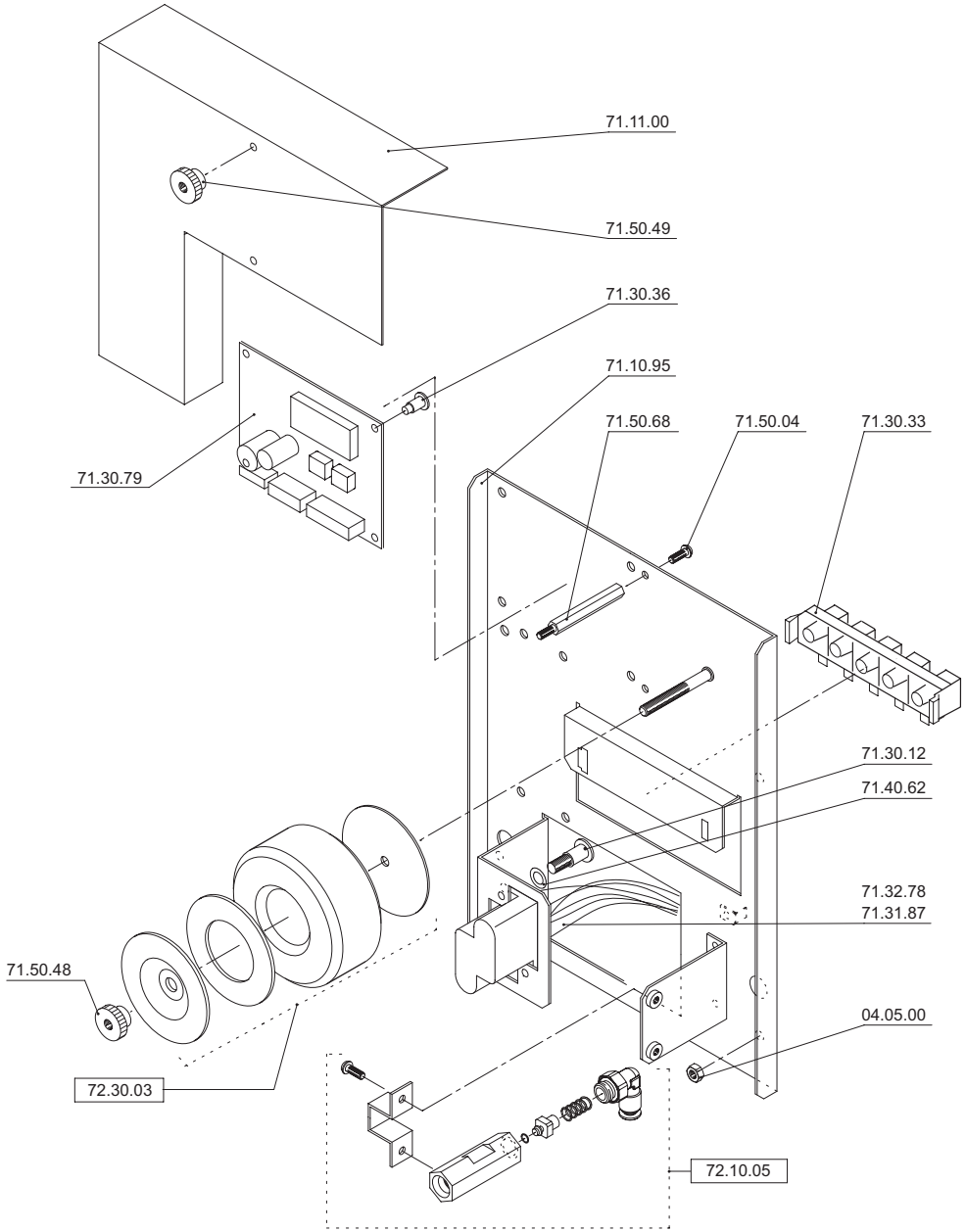

5. Water circuit

				Page	Revision	
					List	Drawing
Water circuit	CT / CTM / CBT			5.1.1 / 5.1.2	REV.4	REV.4
Water circuit	CT / CTM	undercounter		5.2.1 / 5.2.2	REV.4	REV.4
Water circuit	CTS 3.0 kW		V1	5.3.1 / 5.3.2	REV.4	REV.4
Water circuit	CTS 4.2 kW	with sensor	V2	5.4.1 / 5.4.2	REV.4	REV.4
Water circuit	CTS 4.2 kW	with sensor		5.4.3 / 5.4.4	REV.4	REV.4
Water circuit	CTS 4.2 kW	without sensor		5.5.1 / 5.5.2	REV.4	REV.4
Water circuit	CTS 3.0 kW	undercounter		5.6.1 / 5.6.2	REV.4	REV.4
Water circuit	CB			5.7.1 / 5.7.2	REV.4	REV.4
Water circuit	CTMF5-T			5.8.1 / 5.8.2	REV.4	REV.4
Water circuit	CT / CTM / CTS / CTMS	easyline		5.9.1 / 5.9.2	REV.4	REV.4
Water circuit	TS 3.0 kW	without sensor		5.10.1 / 5.10.2	REV.4	REV.4
Water circuit	TS 3.0 kW	with sensor		5.11.1 / 5.11.2	REV.4	REV.4
Water circuit	TS 4.2 kW	without sensor		5.12.1 / 5.12.2	REV.4	REV.4
Water circuit	TS 4.2 kW	with sensor		5.13.1 / 5.13.2	REV.4	REV.4
Water circuit	T-unit			5.14.1 / 5.14.2	REV.4	REV.4

Part No	Description	Quantity
72.10.90	**Water circuit CT/CTM, assembly**	**1**
71.20.13	Pipe ø8/6x900	1
71.21.09	Pipe ø4/2x140	1
71.21.10	Pipe ø4/2x110	1
71.21.11	Pipe ø4/2x700	1
72.10.04	**Tap, assembly**	**1**
20.20.31	O-ring ø11x1.5	1
71.10.29	Connector panel	1
71.20.16	Threaded elbow joint 8-1/4''	1
71.20.41	Tap	1
71.22.39	Reduction TS 1/4-3/8"	1
71.23.21	Filter for water inlet	1
71.50.15	Oval head screw M4x8	2
72.10.05	**Cold water connector, assembly**	**1**
71.10.16	Bracket	1
71.50.15	Oval head screw M4x8	2
72.20.63	**Water clip, assembly**	**1**
71.20.16	Threaded elbow joint 8-1/4''	1
71.20.29	Cold water connector	1
71.20.30	Valve	1
71.20.63	O-ring ø2.9x1.78	1
71.40.28	Spring ø7.5x15	1
72.10.06	**Mounting block, assembly for mechanical module**	**1**
71.20.23	Threaded elbow joint 4-1/8''	2
71.20.35	Mounting block for mechanical module	1
71.40.61	Washer ø16x5	2
71.50.42	Tallow-drop screw ø40x16	2
72.10.07	**Mounting block assembly for hydraulic module**	**1**
71.20.34	Mounting block for hydraulic module	1
71.22.19	Straight connection 4-1/8''	3
71.40.61	Washer ø16x5	2
71.50.42	Tallow-drop screw ø40x16	2
72.10.12	**Tea outlet CTM/CT, assembly**	**1**
71.20.21	Bushing 1/4-1/8	1
71.20.45	Tea outlet nut	1
71.20.46	Tea pipe	1
71.20.47	Anti splash housing	1
71.20.48	Seal ø11.5/4x5	1
71.20.49		1

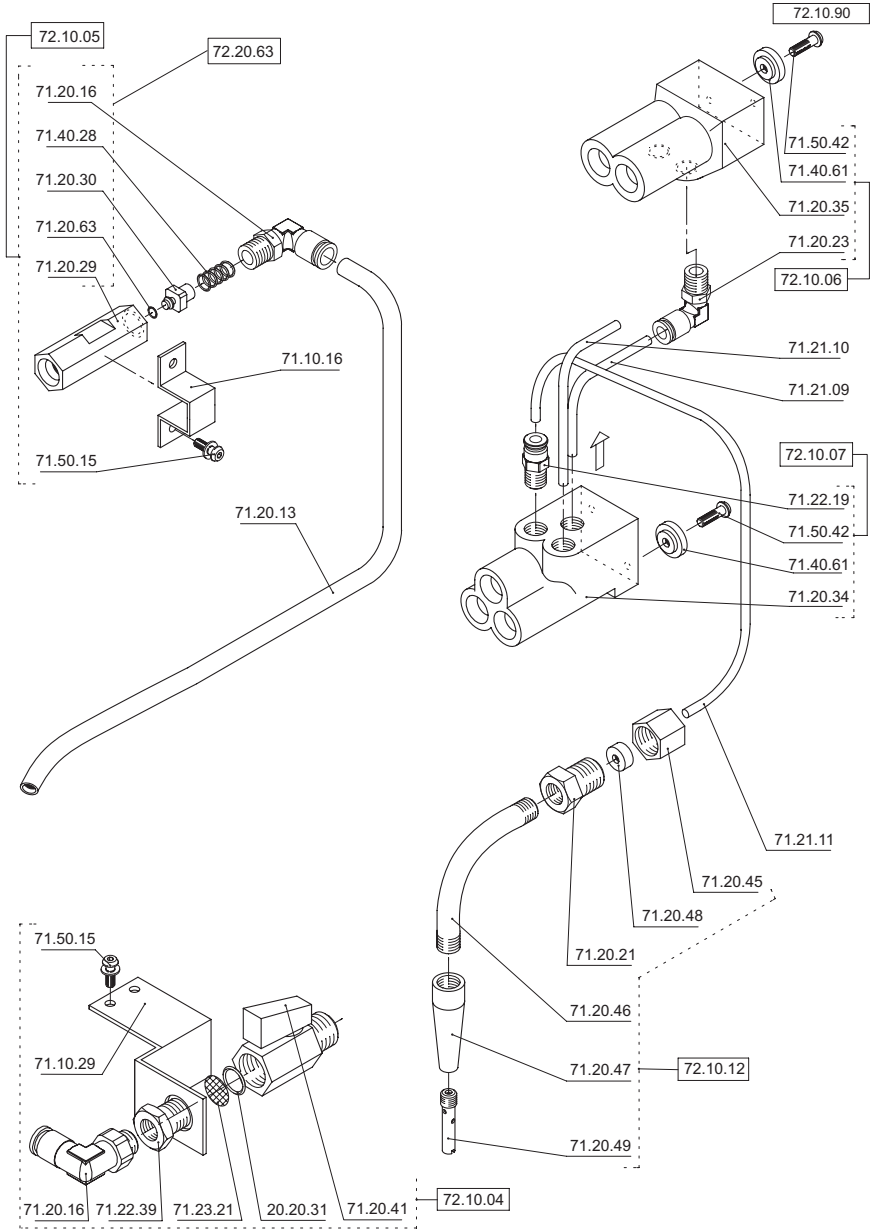

Part No	Description	Quantity
72.80.29	**Water circuit CTM undercounter, assembly**	**1**
71.20.13	Pipe ø8/6x900	1
71.21.09	Pipe ø4/2x140	1
71.21.10	Pipe ø4/2x110	1
71.21.97	Pipe ø4/2x1000	1
72.10.05	**Cold water connector, assembly**	**1**
71.10.16	Bracket	1
71.50.15	Oval head screw M4x8	2
72.20.63	**Water clip, assembly**	**1**
71.20.16	Threaded elbow joint 8-1/4''	1
71.20.29	Cold water connector	1
71.20.30	Valve	1
71.20.63	O-ring ø2.9x1.78	1
71.40.28	Spring ø7.5x15	1
72.10.06	**Mounting block, assembly for mechanical module**	**1**
71.20.23	Threaded elbow joint 4-1/8''	2
71.20.35	Mounting block for mechanical module	1
71.40.61	Washer ø16x5	2
71.50.42	Tallow-drop screw ø40x16	2
72.10.07	**Mounting block assembly for hydraulic module**	**1**
71.22.19	Threaded joint 4-1/8"	3
71.20.34	Mounting block for hydraulic module	1
71.40.61	Washer ø16x5	2
71.50.42	Tallow-drop screw ø40x16	2
72.11.88	**Tap undercounter, assembly**	**1**
20.20.31	O-ring ø11x1.5	1
71.15.04	Connector panel undercounter	1
71.20.16	Threaded ellbow joint 8-1/4''	1
71.20.41	Tap	1
71.22.39	Reduction TS 1/4-3/8"	1
71.23.21	Filter for water inlet	1
71.50.15	Oval head screw M4x8	2
72.80.09	**Tea outlet undercounter, assembly**	**1**
71.20.45	Tea outlet nut	1
71.20.47	Anti splash housing	1
71.20.48	Seal ø11.5/4x5	1
71.20.49	Anti splash piece	1
71.21.94	Tea outlet undercounter	1
71.21.95	Threaded union undercounter	1
71.50.61		1

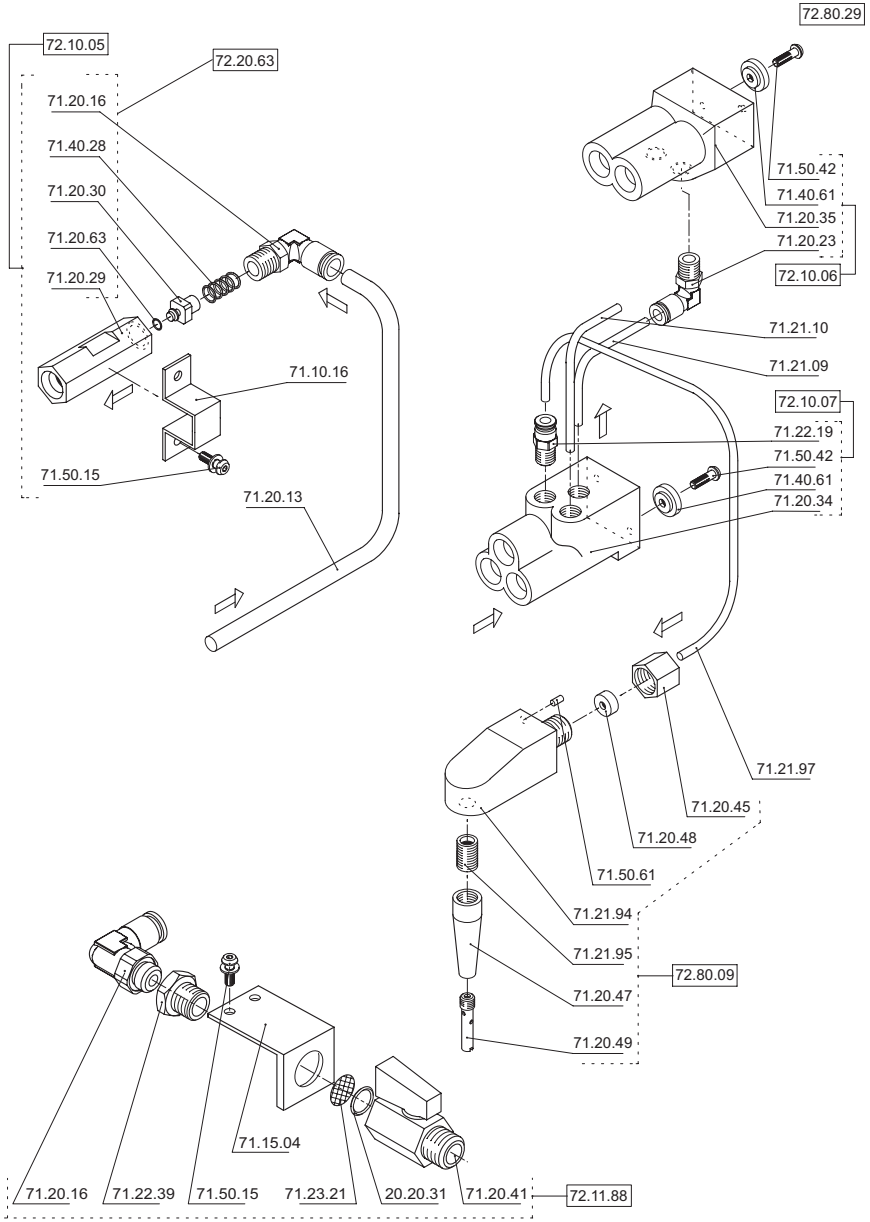

Part No	Description	Quantity
72.10.42	**Water circuit CTS, assembly**	**1**
71.20.27	Clip for steam pipe	1
71.20.60	Pipe ø8/6x360	1
71.20.65	Pipe ø8/6x780	1
71.20.81	T-connection ø8-8	1
71.21.09	Pipe ø4/2x140	1
71.21.10	Pipe ø4/2x110	1
71.21.60	Peg	1
71.28.43	Pipe ø8/6x310	1
71.41.65	Grasp to steam pipe	1
71.50.71	Circlips ø20	1
72.10.04	**Tap assembly**	**1**
20.20.31	O-ring ø11x1.5	1
71.10.29	Connector panel	1
71.20.16	Threaded elbow joint 8-1/4''	1
71.20.41	Tap	1
71.22.39	Reduction TS 1/4-3/8"	1
71.23.21	Filter for water inlet	1
71.50.15	Oval head screw M4x8	2
72.10.05	**Cold water connector, assembly**	**1**
71.10.16	Bracket	1
71.50.15	Oval head screw M4x8	2
72.20.63	**Water clip, assembly**	**1**
71.20.16	Threaded elbow joint 8-1/4''	1
71.20.29	Cold water connector	1
71.20.30	Valve	1
71.20.63	O-ring ø2.9x1.78	1
71.40.28	Spring ø7.5x15	1
72.10.06	**Mounting block assembly for mechanical module**	**1**
71.20.23	Threaded elbow joint 4-1/8''	2
71.20.35	Mounting block for mechanical module	2
71.40.61	Washer ø16x5	2
71.50.42	Tallow drop screw ø4x16	2
72.10.07	**Mounting block assembly for hydraulic module**	**1**
71.20.34	Mounting block for hydraulic module	1
71.22.19	Straight connection 4-1/8''	3
71.40.61	Washer ø16x5	2
71.50.42	Tallow-drop screw ø4x16	2
72.10.43	**Tea outlet CTS, assembly**	**1**
71.20.21	Bushing 1/4-1/8	4
71.20.46	Tea pipe	1
71.20.47	Anti splash housing	1
71.20.49	Anti splash piece	1
71.20.51	Tea oulet nut ø6	1
71.23.95	Seal ø11.5/6x5	1
72.70.07	**Steam outlet CTS, assembly**	**1**
71.20.04	O-ring ø6.07x1.78	1
71.20.73	Steam pipe	1
71.21.06		1

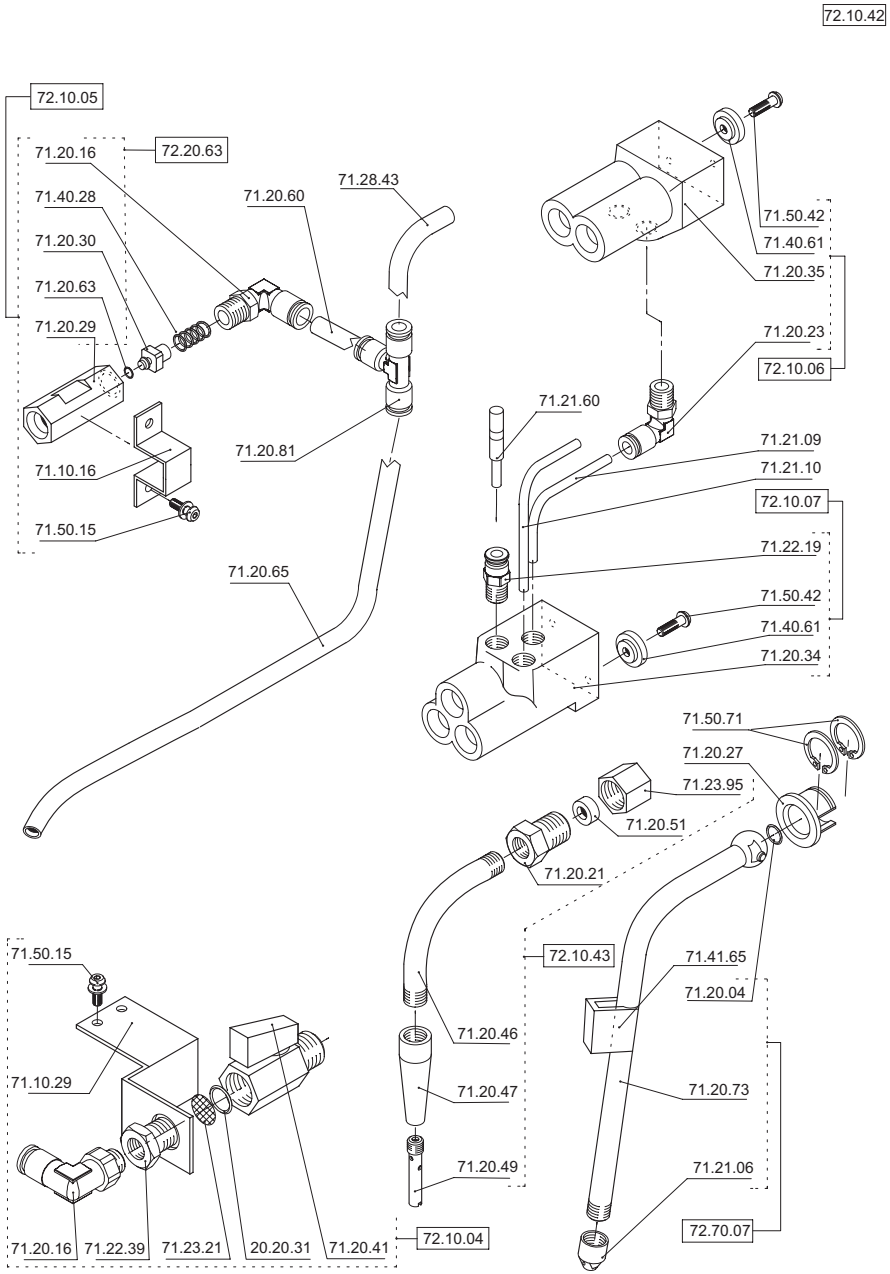

Part No	Description	Quantity
71.20.60	Pipe ø 8/6x360	1
71.20.65	Pipe ø 8/6x780	1
71.20.81	T-connection ø8-8	1
71.21.09	Pipe ø4/2x140	1
71.21.10	Pipe ø4/2x110	1
71.21.60	Peg	1
71.22.32	Pipe ø8/6x310	2
71.22.33	Grasp to steam pipe	2
71.22.44	Circlips ø20	1
71.33.14	Grounding ring steam pipe	2
72.10.04	**Tap assembly**	**1**
20.20.31	O-ring ø11x1.5	1
71.10.29	Connector panel	1
71.20.07	Threaded elbow joint 8-3/8''	1
71.20.41	Tap	1
71.23.21	Filter for water inlet	1
71.50.15	Oval head screw M4x8	2
72.10.05	**Cold water connector, assembly**	**1**
71.10.16	Bracket	1
71.50.04	Cheese head screw M 4x8	2
71.50.29	Spring washer M 4	2
72.20.63	**Water clip, assembly**	**1**
71.20.16	Threaded elbow joint 8-1/4''	1
71.20.29	Cold water connector	1
71.20.30	Valve	1
71.20.63	O-ring ø2.9x1.78	1
71.40.28	Spring ø7.5x15	1
72.10.06	**Mounting block assembly for mechanical modul**	**1**
71.20.23	Threaded elbow joint 4-1/8''	1
71.20.35	Mounting block for mechanical modul	2
71.22.16	Seal 1/8''	2
71.40.61	Washer ø16x5	2
71.50.42	Tallow drop screw ø4x16	2
72.10.07	**Mounting block assembly for hydraulic modul**	**1**
71.20.34	Mounting block for hydraulic modul	1
71.22.16	Seal 1/8''	3
71.22.19	Straight connection 4-1/8''	3
71.40.61	Washer ø16x5	2
71.50.42	Tallow-drop screw ø4x16	2
72.70.16	**Steam outlet SB, assembly**	**1**
71.21.06	Steam outlet	1
71.22.36	Steam pipe USA	1
72.70.17	**NTC-pipe, assembly**	**1**
71.22.34	NTC housing and sensor for steam pipe	1
71.22.35	NTC pipe for steam pipe USA	1
72.70.25	**Handle NTC-pipe SB, assembly**	**1**
71.41.07	Cap for steam-handle SB	4
71.41.68	Flange right NTC pipe SB	1
71.41.69	Flange left NTC pipe SB	1
71.41.70	Handle NTC pipe SB	1
71.50.41	Oval head screw ø4x10	4
72.10.47	**Tea outlet CTS, assembly**	**1**
10.09.10	O-ring ø5x1.5	1
71.20.21	Bushing 1/4-1/8	1
71.20.46	Tea pipe	1
71.20.47	Anti splash housing	1
71.20.49	Brise jet	1
71.21.17	Threaded joint 6-1/8''	1
71.22.50		1

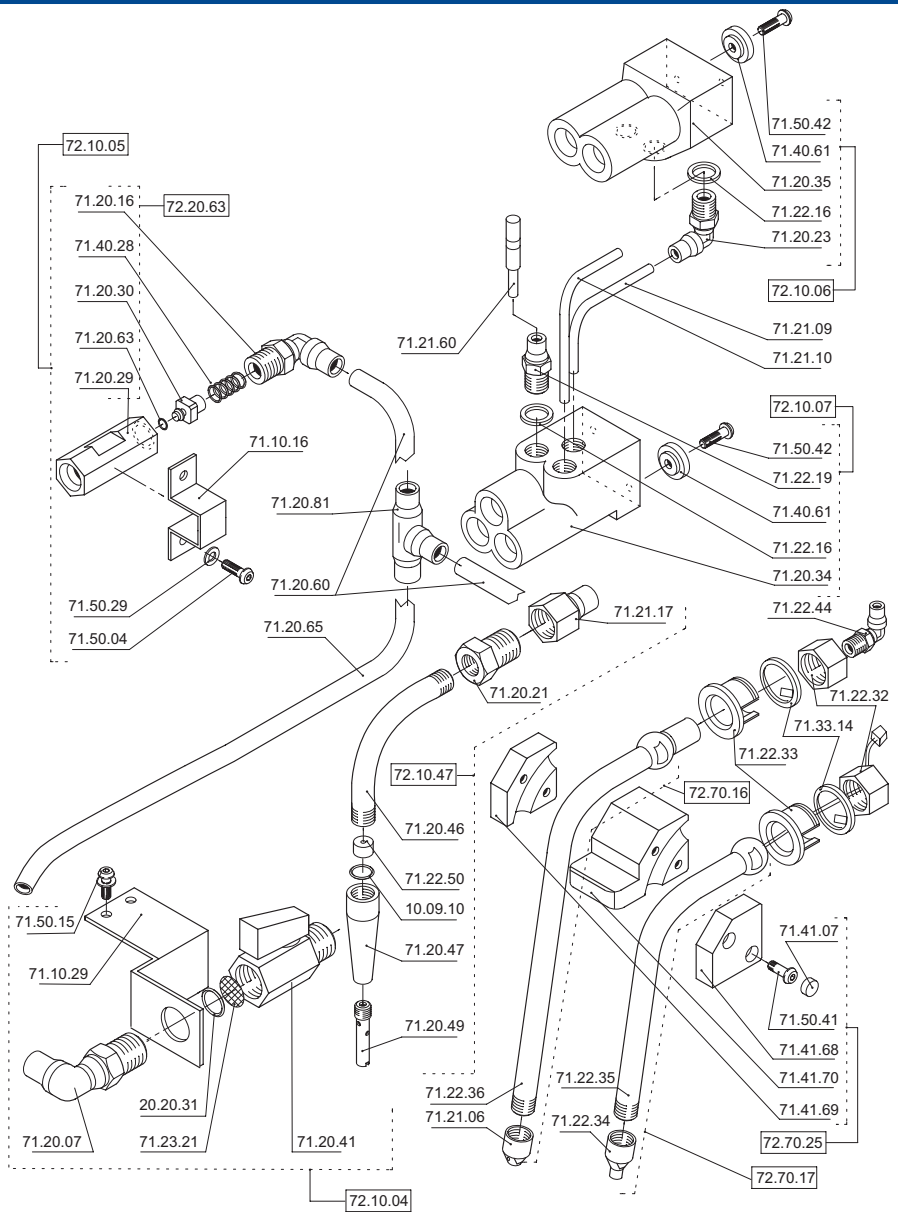

Part No	Description	Quantity
72.21.83	**Water circuit CTS 4.2KW with sensor, assembly**	**1**
71.15.01	Support plate for NTC connector	1
71.20.60	Pipe ø8/6x360	1
71.20.65	Pipe ø8/6x780	1
71.20.81	T-connection ø8-8	1
71.21.09	Pipe ø4/2x140	1
71.21.10	Pipe ø4/2x110	1
71.21.60	Peg	1
71.22.32	Pipe ø8/6x310	2
71.22.33	Grasp to steam pipe	2
71.28.12	Elbow fitting 8-1/8"K	1
71.28.43	Teflon pipe ø8/6x310	1
71.33.14	Grounding ring steam pipe	2
71.33.92	Female connector 2 poles NTC connection	1
71.40.69	Tie-wrap 85/22	1
72.10.04	**Tap, assembly**	**1**
20.20.31	O-ring ø11x1.5	1
71.10.29	Connector panel	1
71.20.16	Threaded elbow joint 8-1/4''	1
71.20.41	Tap	1
71.22.39	Reduction TS 1/4-3/8"	1
71.23.21	Filter for water inlet	1
71.50.15	Oval head screw M4x8	2
72.10.05	**Cold water connector, assembly**	**1**
71.10.16	Bracket	1
71.50.15	Oval head screw M4x8	2
72.20.63	**Water clip, assembly**	**1**
71.20.16	Threaded elbow joint 8-1/4''	1
71.20.29	Cold water connector	1
71.20.30	Valve	1
71.20.63	O-ring ø2.9x1.78	1
71.40.28	Spring ø7.5x15	1
72.10.06	**Mounting block assembly for mechanical module**	**1**
71.20.23	Threaded elbow joint 4-1/8''	1
71.20.35	Mounting block for mechanical module	2
71.40.61	Washer ø16x5	2
71.50.42	Tallow drop screw ø 4x16	2
72.10.07	**Mounting block assembly for hydraulic module**	**1**
71.20.34	Mounting block for hydraulic module	1
71.22.19	Straight connection 4-1/8''	3
71.40.61	Washer ø16x5	2
71.50.42	Tallow-drop screw ø4x16	2
72.70.16	**Steam outlet SB, assembly**	**1**
71.21.06	Steam outlet	1
71.22.36	Steam pipe USA	1
72.70.66	**NTC-pipe V2, assembly**	**1**
71.22.34	NTC housing and sensor for steam pipe	1
71.22.35	NTC pipe for steam pipe USA	1
71.33.91	Male connector 2 poles NTC connection	1
72.70.25	**Handle NTC-pipe SB, assembly**	**1**
71.41.07	Cap for steam-handle SB	4
71.41.68	Flange right NTC pipe SB	1
71.41.69	Flange left NTC pipe SB	1
71.41.70	Handle NTC pipe SB	1
71.50.41	Oval head screw ø4x10	4
72.10.47	**Tea outlet CTS, assembly**	**1**
10.09.10	O-ring ø5x1.5	1
71.20.21	Bushing 1/4-1/8	1
71.20.46	Tea pipe	1
71.20.47	Anti splash housing	1
71.20.49	Brise jet	1
71.22.50	Outlet nozzle 1.3mm	1
71.28.14		1

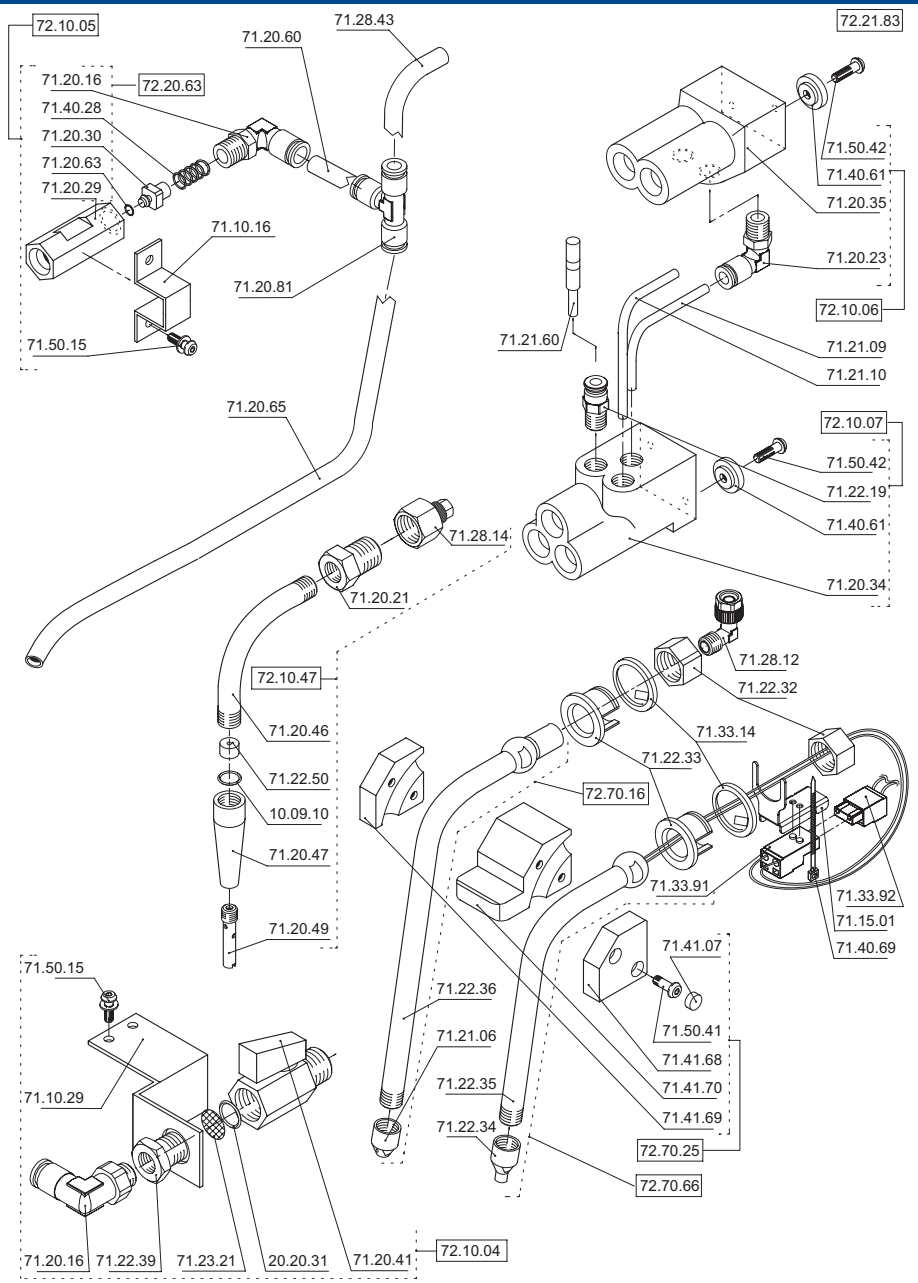

Part No	Description	Quantity
72.21.85	**Water circuit CTS 4.2 KW without sensor, assembly**	**1**
71.20.60	Pipe ø8/6x360	1
71.20.65	Pipe ø8/6x780	1
71.20.81	T-connection ø8-8	1
71.21.09	Pipe ø4/2x140	1
71.21.10	Pipe ø4/2x110	1
71.21.60	Peg	1
71.22.32	Pipe ø8/6x310	1
71.22.33	Grasp to steam pipe	1
71.28.12	Elbow fitting 8-1/8"K	1
71.28.43	Teflon pipe ø8/6x310	1
71.33.14	Grounding ring steam pipe	1
71.41.65	Grasp to stiam piepe CE	1
72.10.04	**Tap assembly**	**1**
20.20.31	O-ring ø11x1.5	1
71.10.29	Connector panel	1
71.20.16	Threaded elbow joint 8-1/4''	1
71.20.41	Tap	1
71.22.39	Reduction TS 1/4-3/8"	1
71.23.21	Filter for water inlet	1
71.50.15	Oval head screw M4x8	2
72.10.05	**Cold water connector, assembly**	**1**
71.10.16	Bracket	1
71.50.15	Oval head screw M4x8	2
72.20.63	**Water clip, assembly**	**1**
71.20.16	Threaded elbow joint 8-1/4''	1
71.20.29	Cold water connector	1
71.20.30	Valve	1
71.20.63	O-ring ø2.9x1.78	1
71.40.28	Spring ø7.5x15	1
72.10.06	**Mounting block assembly for mechanical module**	**1**
71.20.23	Threaded elbow joint 4-1/8''	1
71.20.35	Mounting block for mechanical module	2
71.40.61	Washer ø16x5	2
71.50.42	Tallow drop screw ø4x16	2
72.10.07	**Mounting block assembly for hydraulic module**	**1**
71.20.34	Mounting block for hydraulic module	1
71.22.19	Straight connection 4-1/8''	3
71.40.61	Washer ø16x5	2
71.50.42	Tallow-drop screw ø4x16	2
72.70.16	**Steam outlet SB, assembly**	**1**
71.21.06	Steam outlet	1
71.22.36	Steam pipe USA	1
72.10.47	**Tea outlet CTS, assembly**	**1**
10.09.10	O-ring ø5x1.5	1
71.20.21	Bushing 1/4-1/8	1
71.20.46	Tea pipe	1
71.20.47	Anti splash housing	1
71.20.49	Brise jet	1
71.22.50	Outlet nozzle 1.3mm	1
71.28.14		1

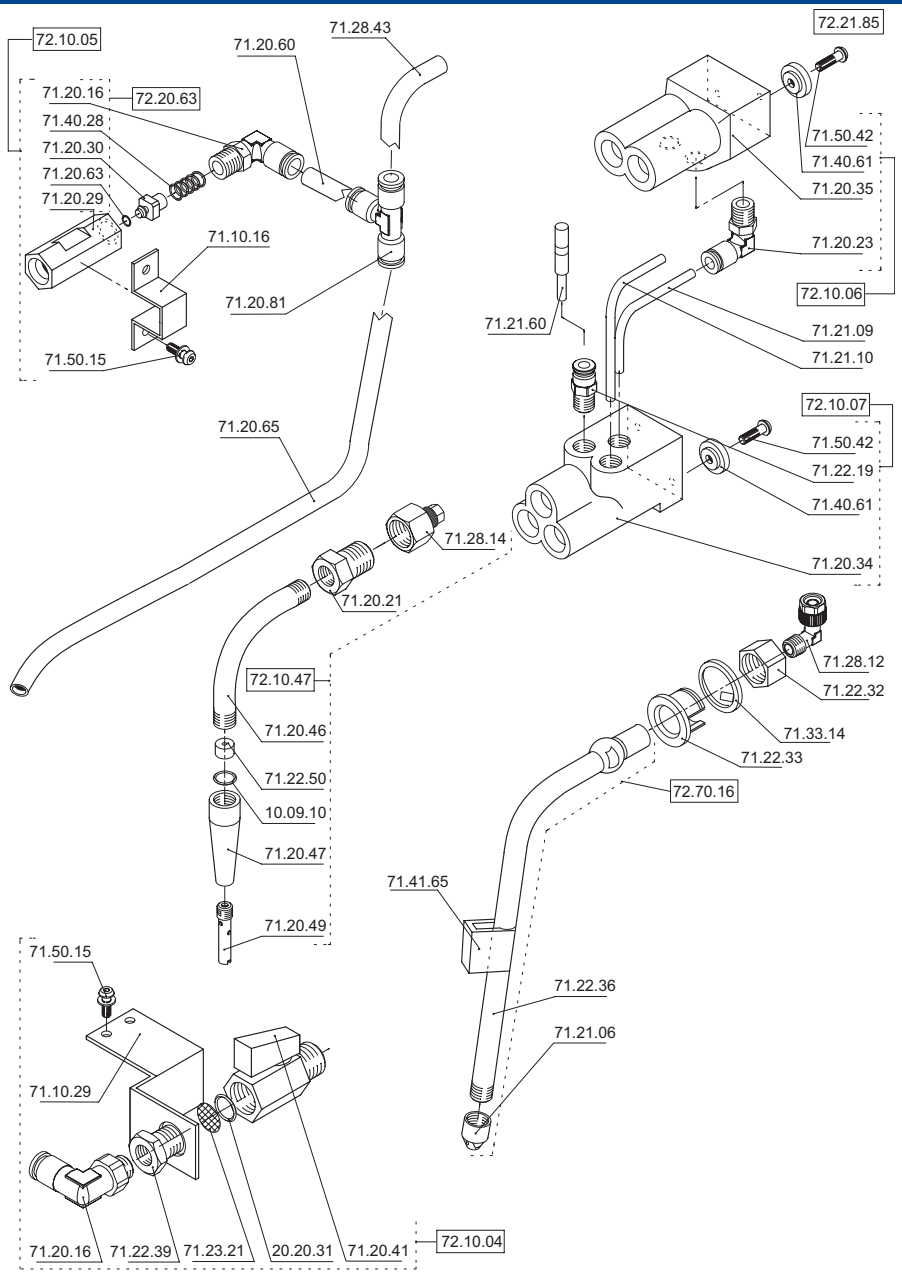

Part No	Description	Quantity
72.80.28	**Water circuit CTS undercounter, assembly**	**1**
71.20.27	Clip for steam pipe	1
71.20.60	Pipe ø8/6x360	2
71.20.65	Pipe ø8/6x780	1
71.20.81	T-connection ø8-8	1
71.21.09	Pipe ø4/2x140	1
71.21.10	Pipe ø4/2x110	1
71.21.60	Peg	1
71.41.65	Grasp to steam pipe CE	1
71.50.71	Circlips ø20	2
72.10.05	**Cold water connector, assembly**	**1**
71.10.16	Bracket	1
71.50.15	Oval head screw M4x8	2
72.20.63	**Water clip, assembly**	**1**
71.20.16	Threaded elbow joint 8-1/4''	1
71.20.29	Cold water connector	1
71.20.30	Valve	1
71.20.63	O-ring ø2.9 1.78	1
71.40.28	Spring ø7.5x15	1
72.10.06	**Mounting block, assembly for mechanical module**	**1**
71.20.23	Threaded elbow joint 4-1/8''	2
71.20.35	Mounting block for mechanical module	1
71.40.61	Washer ø16x5	2
71.50.42	Tallow-drop screw ø16x5	2
72.10.07	**Mounting block, assembly for hydraulic module**	**1**
71.22.19	Threaded joint 4-1/8"	3
71.20.34	Mounting block for hydraulic module	1
71.40.61	Washer ø16x5	2
71.50.42	Tallow-drop screw ø16x5	2
72.11.88	**Tap undercounter, assembly**	**1**
20.20.31	O-ring ø11x1.5	1
71.15.04	Connector panel undercounter	1
71.20.16	Threaded ellbow joint 8-1/4''	1
71.20.41	Tap	1
71.22.39	Reduction TS 1/4-3/8"	1
71.23.21	Filter for water inlet	1
71.50.15	Oval head screw M4x8	2
72.21.84	**Tea outlet undercounter CTS, assembly**	**1**
71.20.47	Anti splash housing	1
71.20.49	Anti splash piece	1
71.20.51	Seal ø11.5/6x5	1
71.21.94	Tea outlet undercounter	1
71.21.95	Threaded union undercounter	1
71.23.95	Tea outlet nut ø6	1
71.50.61	Pin ø3x6	1
72.80.30	**Steam outlet undercounter, assembly**	**1**
71.20.04	O-ring ø6.07x1.78	1
71.21.06	Steam outlet	1
71.22.07		1

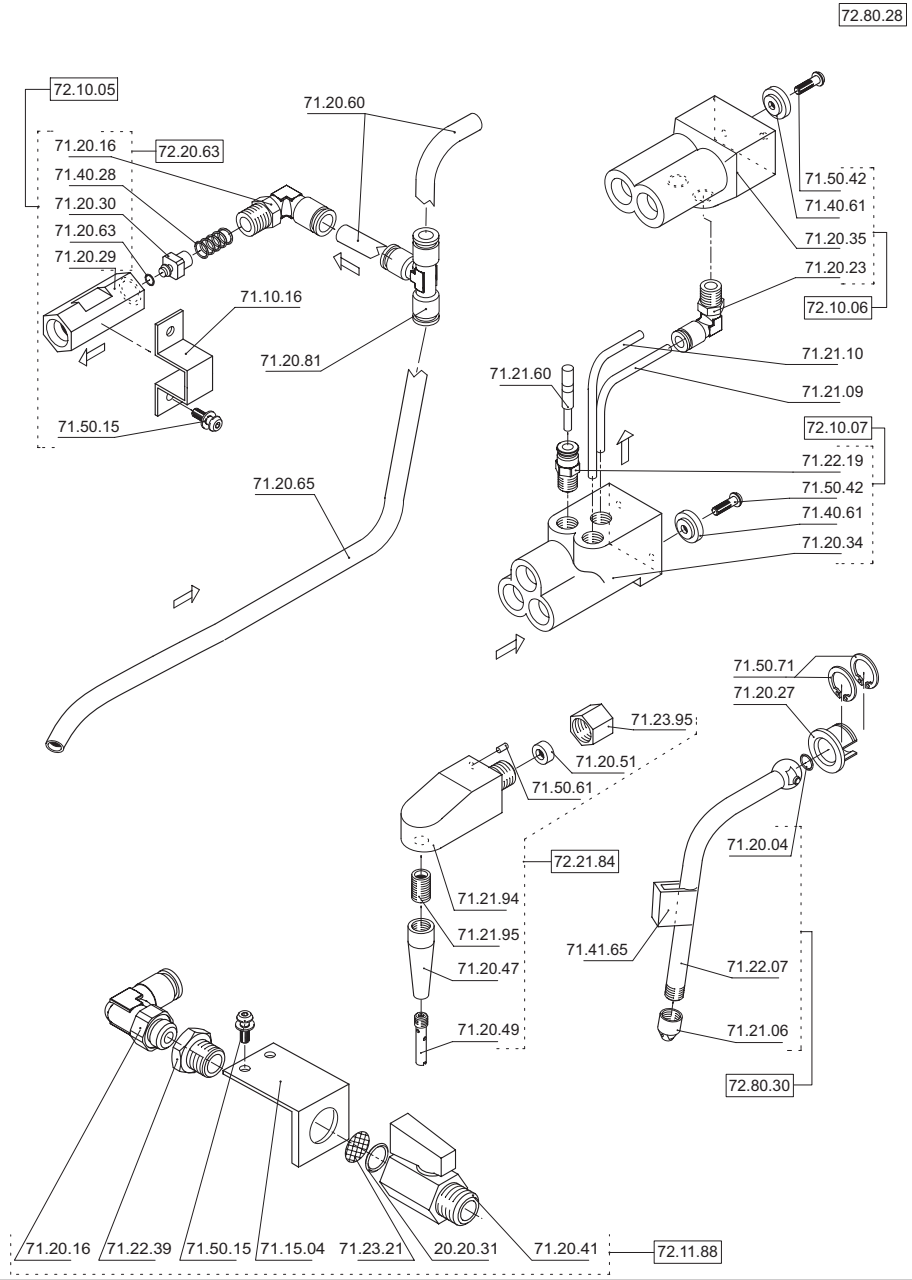

Part No	Description	Quantity
72.45.10	**Water circuit CB, assembly**	**1**
71.20.13	Pipe ø8/6x900	1
71.21.09	Pipe ø4/2x140	1
71.21.10	Pipe ø4/2x110	1
71.21.60	Peg	1
72.10.04	**Tap, assembly**	**1**
20.20.31	O-ring ø11x1.5	1
71.10.29	Connector panel	1
71.20.16	Threaded elbow joint 8-1/4''	1
71.20.41	Tap	1
71.22.39	Reduction TS 1/4-3/8"	1
71.23.21	Filter for water inlet	1
71.50.15	Oval head screw M4x8	2
72.10.05	**Cold water connector, assembly**	**1**
71.10.16	Bracket	1
71.50.15	Oval head screw M4x8	2
72.20.63	**Water clip, assembly**	**1**
71.20.16	Threaded elbow joint 8-1/4''	1
71.20.29	Cold water connector	1
71.20.30	Valve	1
71.20.63	O-ring ø2.9x1.78	1
71.40.28	Spring ø7.5x15	1
72.10.06	**Mounting block, assembly for mechanical module**	**1**
71.20.23	Threaded elbow joint 4-1/8''	2
71.20.35	Mounting block for mechanical module	1
71.40.61	Washer ø16x5	2
71.50.42	Tallow-drop screw ø40x16	2
72.10.07	**Mounting block assembly for hydraulic module**	**1**
71.20.34	Mounting block for hydraulic module	1
71.22.19	Straight connection 4-1/8''	3
71.40.61	Washer ø16x5	2
71.50.42		2

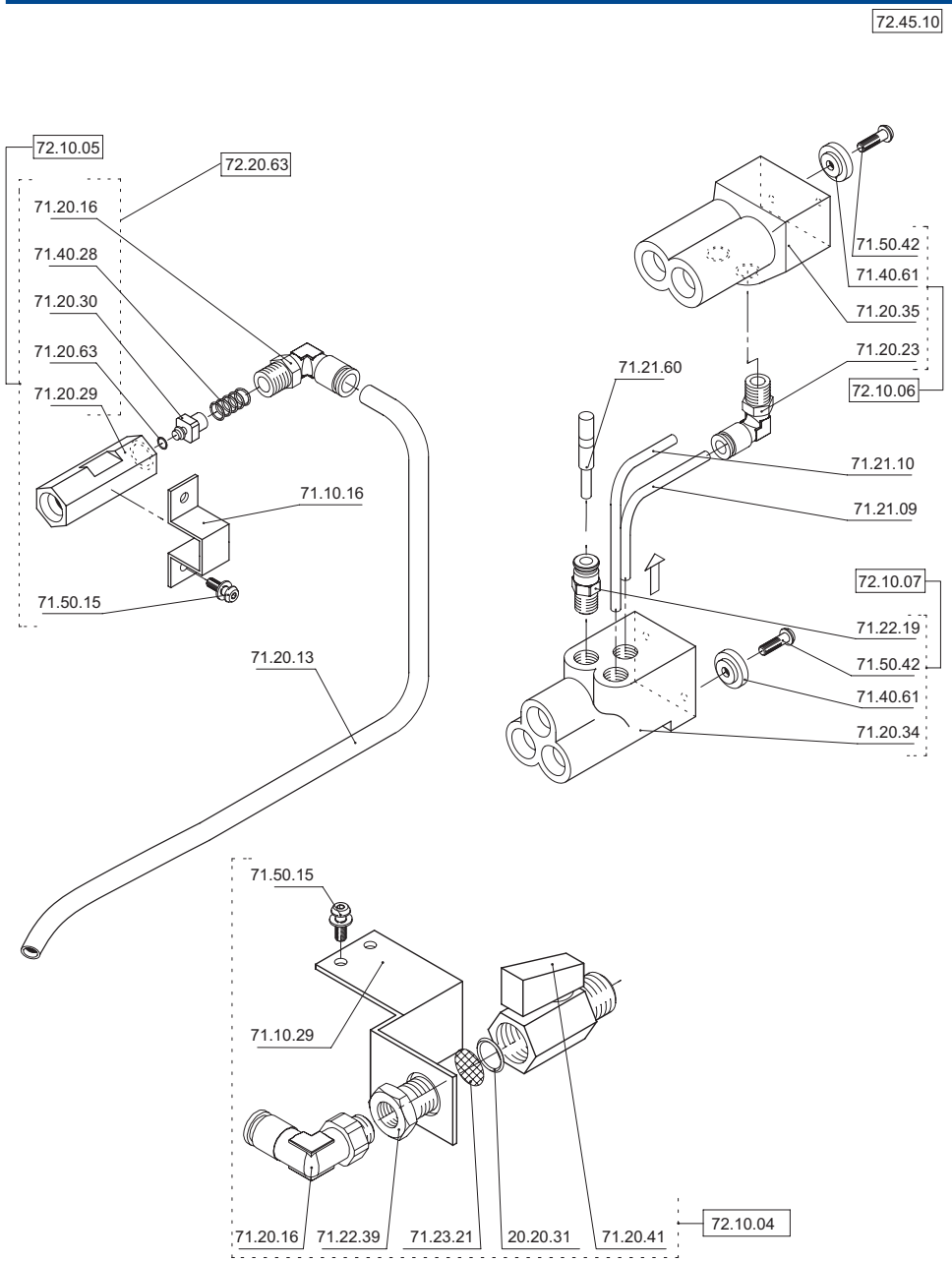

Part No	Description	Quantity
72.21.18	**Water circuit CT/CTM, assembly**	**1**
71.20.13	Pipe ø8/6x900	1
71.21.09	Pipe ø4/2x140	1
71.21.10	Pipe ø4/2x110	1
71.21.60	Peg	1
71.22.49	Seal ø15x9.5x2 for reinforced water pipe	1
71.26.82	Rainforced water pipe ø3/8''x0.7m	1
71.26.87	Rainforced water pipe ø3/8''x1.5m	1
72.10.05	**Cold water connector, assembly**	**1**
71.10.16	Bracket	1
71.50.15	Oval head screw M4x8	2
72.20.63	**Water clip, assembly**	**1**
71.20.16	Threaded elbow joint 8-1/4''	1
71.20.29	Cold water connector	1
71.20.30	Valve	1
71.20.63	O-ring ø2.9x1.78	1
71.40.28	Spring ø7.5x15	1
72.10.06	**Mounting block, assembly for mechanical module**	**1**
71.20.23	Threaded elbow joint 4-1/8''	2
71.20.35	Mounting block for mechanical module	1
71.40.61	Washer ø16x5	2
71.50.42	Tallow-drop screw ø40x16	2
72.10.07	**Mounting block assembly for hydraulic module**	**1**
71.20.34	Mounting block for hydraulic module	1
71.22.19	Straight connection 4-1/8''	3
71.40.61	Washer ø16x5	2
71.50.42	Tallow-drop screw ø40x16	2
72.21.17	**Supply of water CT-MF5T, assembly**	**1**
20.20.31	O-ring ø11x1.5	2
71.15.30	Connector panel	1
71.20.41	Tap	2
71.23.21	Filter for water inlet	2
71.26.88	Threaded joint 8-3/8''	1
71.26.89	Elbow 3/8''	1
71.26.90	T-piece 3/8''	1
71.26.91	Locknut G3/8''	1
71.26.92	Reduction G3/8''	1
71.50.15	Oval head screw M4x8	2
72.60.29	**Tea outlet CTM/CT, assembly**	**1**
71.20.21	Bushing 1/4-1/8	1
71.20.46	Tea pipe	1
71.20.47	Anti splash housing	1
71.20.49	Anti splash piece	1
71.21.17		1

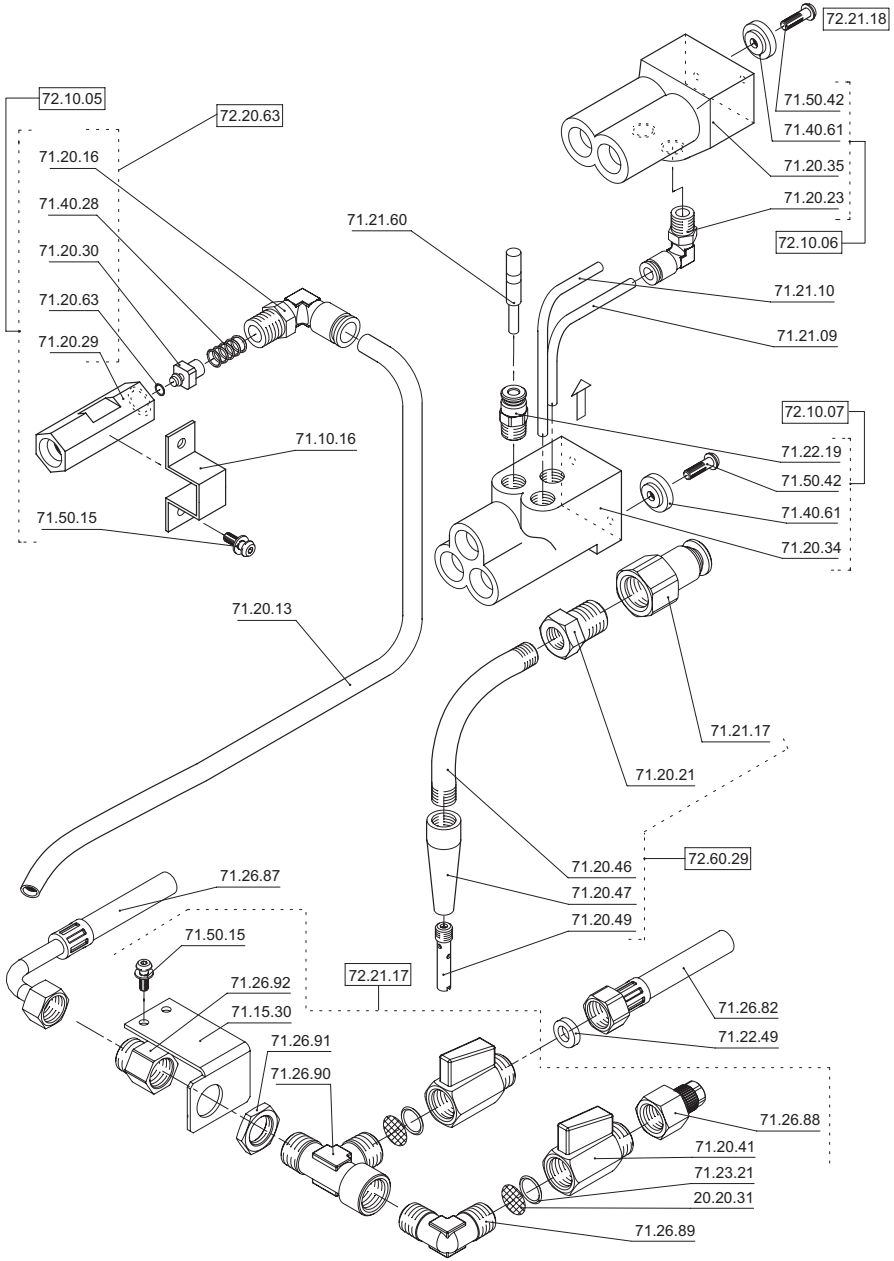

Part No	Description	Quantity
72.21.91	**Water circuit, assembly**	**1**
71.21.10	Pipe ø4/2x110	1
71.22.75	Pipe ø4/6x1070	1
71.23.59	Pipe ø7/10x1030	1
71.23.60	Pipe ø4/2x610	1
72.21.92	**Cold water connector, assembly**	**1**
71.10.16	Bracket	1
71.50.15	Oval head screw H M4x8	2
72.21.63	**Water clip, assembly**	**1**
71.20.29	Cold water connectiion	1
71.20.30	Valve	1
71.20.63	O-ring ø2.9x1.78	1
71.21.82	Elbow connection 6-1/4"	1
71.40.28	Spring ø7.5x15	1
72.10.06	**Mounting block assembly for mechanique**	**1**
71.20.23	Threaded elbow joint 4-1/8"	1
71.20.35	Mounting block for mechanical module	1
71.40.61	Washer ø16x5	2
71.50.42	Tellow-drop screw KA 40X16	2
72.10.07	**Mounting block assembly for hydraulic module**	**1**
71.20.34	Mounting block for hydraulic module	1
71.22.19	Straight connection 4-1/8"	1
71.40.61	Washer ø16x5	2
71.50.42	Tallow-drop screw KA 40x16	2
72.10.12	**Tea outlet CTM-CT, assembly**	**1**
71.20.21	Bushing 1/4-1/8"	1
71.20.45	Tea outlet nut	1
71.20.46	Tea pipe	1
71.20.47	Anti splash housing	1
71.20.48	Seal ø11.5/4x5	1
71.20.49	Anti splash piece	1
72.10.95	**Tap easy, assembly**	**1**
71.10.29	Connector panel	1
71.20.18	Reduction 3/8-1/8	1
20.20.31	O-ring ø11x1.5	1
71.20.41	Tap	1
71.23.03	Threaded elbow joint 6-1/8"	1
71.23.21	Filter for water inlet	1
71.50.15		2

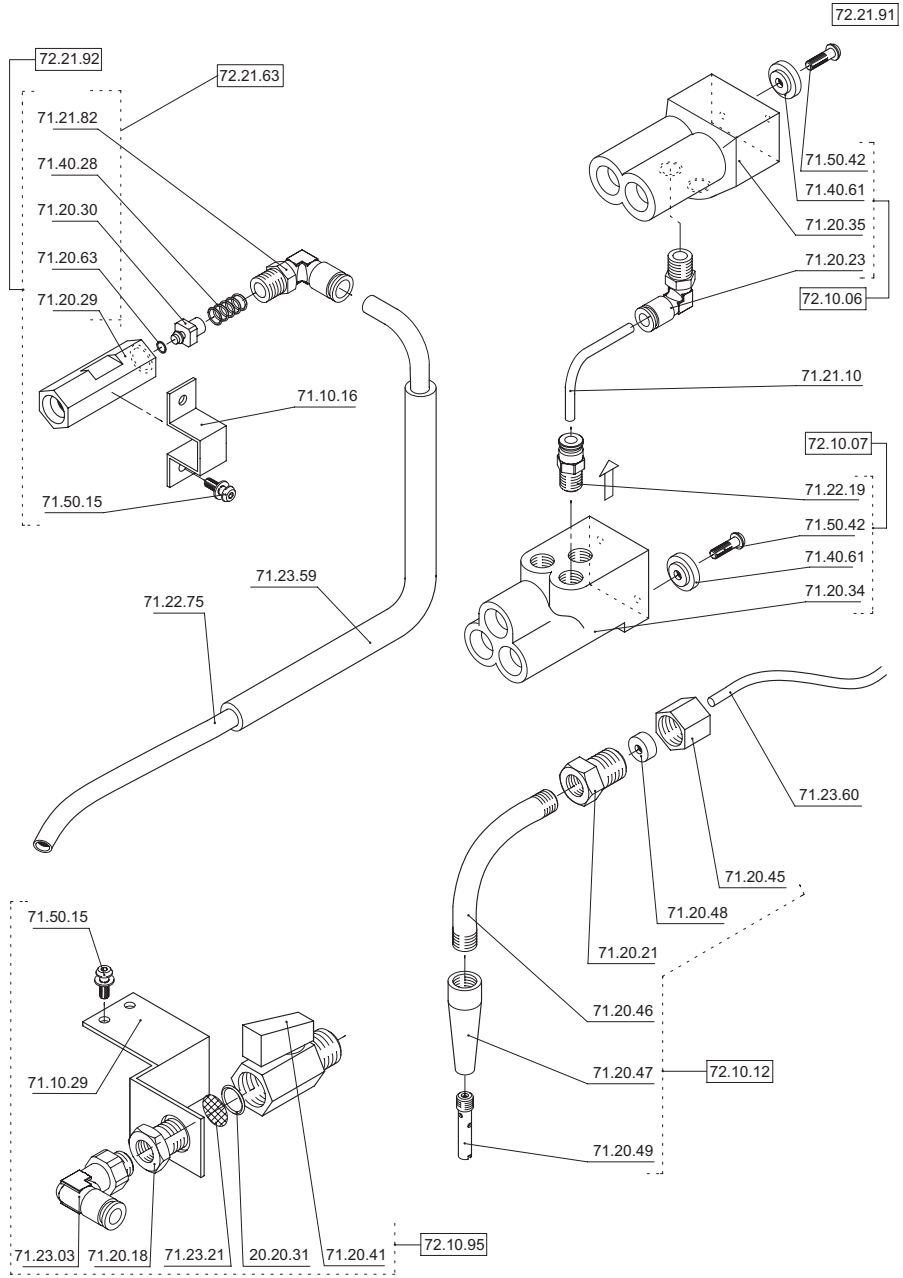

Part No	Description	Quantity
72.21.87	**Water circuit TS 3.0KW without sensor, assembly**	**1**
71.20.13	Pipe ø8/6x1120	1
71.22.32	Not for holder SB	1
71.22.33	Clip for steam pipe	1
71.33.14	Grounding ring steam pipe	1
71.41.65	Grasp to steam pipe	1
72.10.04	**Tap assembly**	**1**
20.20.31	O-ring ø11x1.5	1
71.10.29	Connector panel	1
71.20.16	Threaded elbow joint 8-1/4''	1
71.20.41	Tap	1
71.22.39	Reduction TS 1/4-3/8"	1
71.23.21	Filter for water inlet	1
71.50.15	Oval head screw M4x8	2
72.10.05	**Cold water connector, assembly**	**1**
71.10.16	Bracket	1
71.50.15	Oval head screw M4x8	2
72.20.63	**Water clip, assembly**	**1**
71.20.16	Threaded elbow joint 8-1/4''	1
71.20.29	Cold water connector	1
71.20.30	Valve	1
71.20.63	O-ring ø2.9x1.78	1
71.40.28	Spring ø7.5x15	1
72.10.12	**Tea outlet CTM/CT, assembly**	**1**
71.20.21	Bushing 1/4-1/8	1
71.20.45	Tea oulet nut	1
71.20.46	Tea pipe	1
71.20.47	Anti splash housing	1
71.20.48	Seal ø11.5/4x5	1
71.20.49	Anti splash piece	1
72.70.07	**Steam outlet CTS, assembly**	**1**
71.20.04	O-ring ø6.07x1.78	1
71.20.73	Steam pipe	1
71.21.06		1

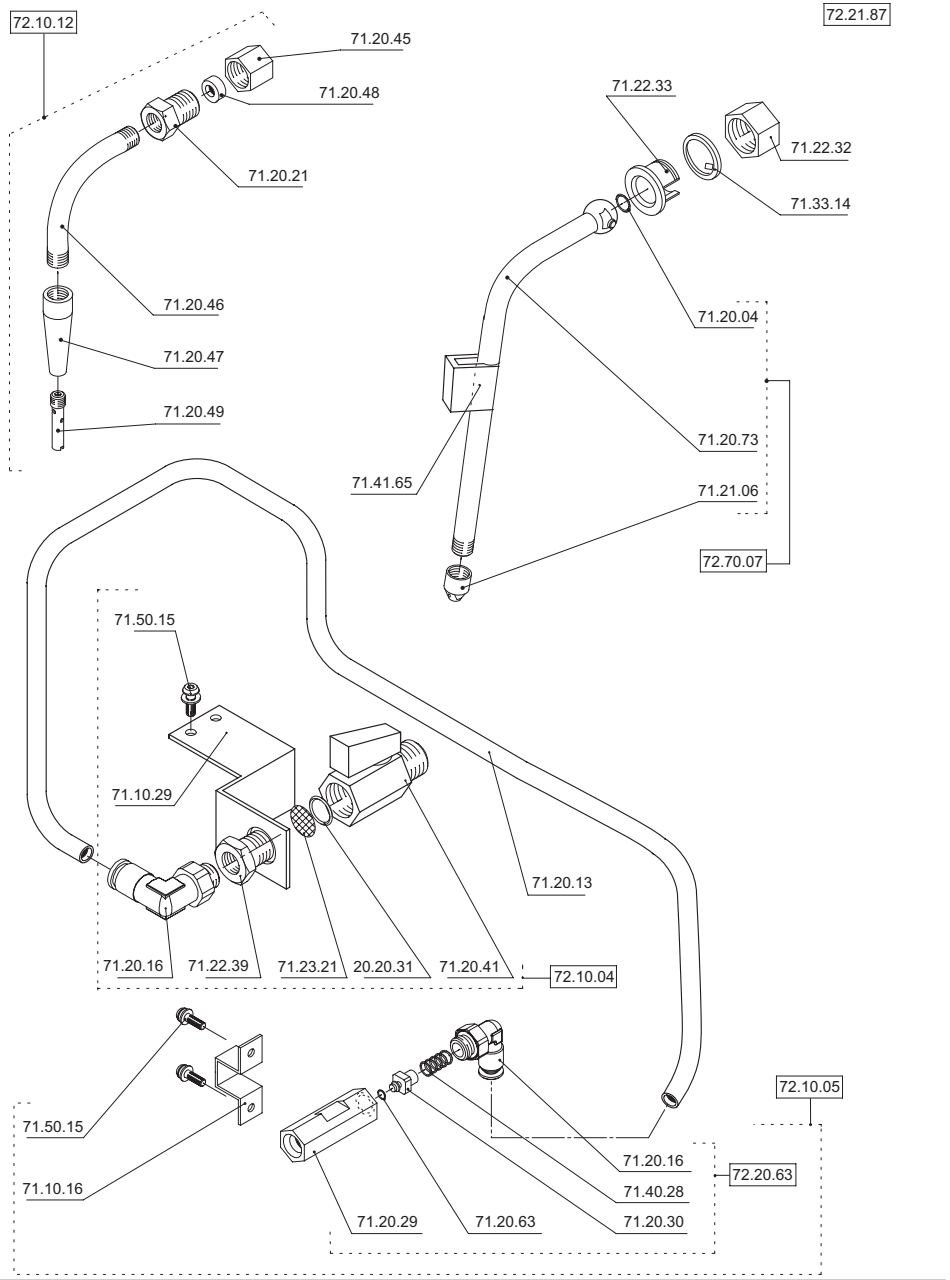

Part No	Description	Quantity
72.21.88	**Water sircuit TS 3.0KW with Sensor, komplett**	**1**
71.15.01	Support plate for NTC connector	1
71.20.13	Pipe ø8/6x1120	1
71.22.32	Pipe ø8/6x310	2
71.22.33	Grasp to steam pipe	2
71.28.12	Elbow fitting 8-1/8"K	1
71.33.14	Grounding ring steam pipe	2
71.33.92	Female connector 2 poles NTC connection	1
71.40.69	Tie-wrap 85/22	1
72.10.04	**Tap assembly**	**1**
20.20.31	O-ring ø11x1.5	1
71.10.29	Connector panel	1
71.20.16	Threaded elbow joint 8-1/4''	1
71.20.41	Tap	1
71.22.39	Reduction TS 1/4-3/8"	1
71.23.21	Filter for water inlet	1
71.50.15	Oval head screw M4x8	2
72.10.05	**Cold water connector, assembly**	**1**
71.10.16	Bracket	1
71.50.15	Oval head screw M4x8	2
72.20.63	**Water clip, assembly**	**1**
71.20.16	Threaded elbow joint 8-1/4''	1
71.20.29	Cold water connector	1
71.20.30	Valve	1
71.20.63	O-ring ø2.9x1.78	1
71.40.28	Spring ø7.5x15	1
72.10.12	**Tea outlet CTM/CT, assembly**	**1**
71.20.21	Bushing 1/4-1/8	1
71.20.45	Tea outlet nut	1
71.20.46	Tea pipe	1
71.20.47	Anti splash housing	1
71.20.48	Seal ø11.5/4x5	1
71.20.49	Anti splash piece	1
72.70.16	**Steam outlet SB, assembly**	**1**
71.21.06	Steam outlet	1
71.22.36	Steam pipe USA	1
72.70.25	**Handle NTC-pipe SB, assembly**	**1**
71.41.07	Cap for steam-handle SB	4
71.41.68	Flange right NTC pipe SB	1
71.41.69	Flange left NTC pipe SB	1
71.41.70	Handle NTC pipe SB	1
71.50.41	Oval head screw ø4x10	1
72.70.66	**NTC-pipe V2, assembly**	**1**
71.22.34	NTC housing and sensor for steam pipe	1
71.22.35	NTC pipe for steam pipe USA	1
71.33.91		1

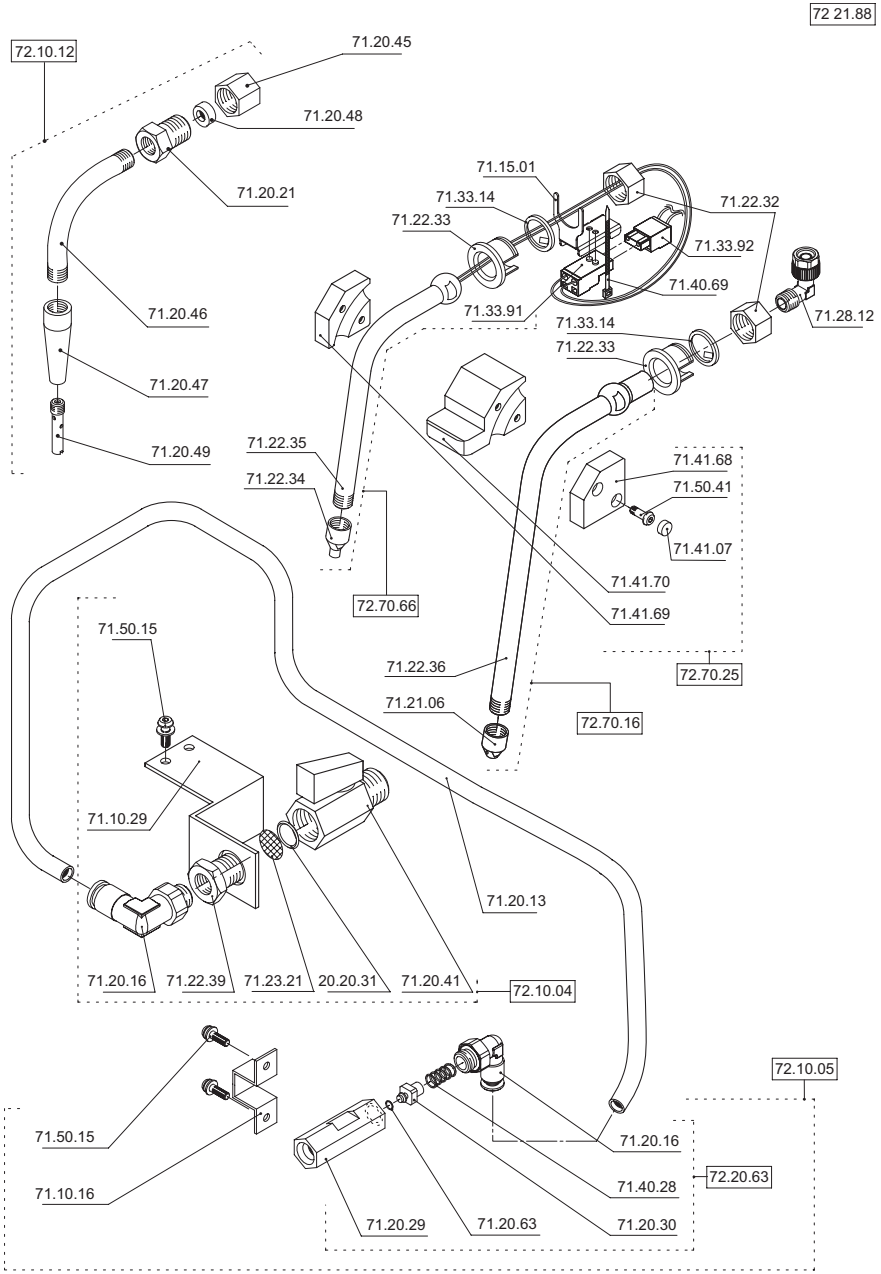

Part No	Description	Quantity
72.21.89	**Water circuit CTS, assembly**	**1**
71.20.13	Pipe ø8/6x1120	1
71.22.32	Not for holder SB	1
71.22.33	Clip for steam pipe	1
71.28.12	Elbow fitting 8-1/8"K	1
71.33.14	Grounding ring steam pipe	1
71.41.65	Grasp to steam pipe	1
72.10.04	**Tap assembly**	**1**
20.20.31	O-ring ø11x1.5	1
71.10.29	Connector panel	1
71.20.16	Threaded elbow joint 8-1/4''	1
71.20.41	Tap	1
71.22.39	Reduction TS 1/4-3/8"	1
71.23.21	Filter for water inlet	1
71.50.15	Oval head screw M4x8	2
72.10.05	**Cold water connector, assembly**	**1**
71.10.16	Bracket	1
71.50.15	Oval head screw M4x8	2
72.20.63	**Water clip, assembly**	**1**
71.20.16	Threaded elbow joint 8-1/4''	1
71.20.29	Cold water connector	1
71.20.30	Valve	1
71.20.63	O-ring ø2.9x1.78	1
71.40.28	Spring ø7.5x15	1
72.10.47	**Tea outlet CTS, assembly**	**1**
10.09.10	O-ring ø5x1.5	1
71.20.21	Bushing 1/4-1/8	1
71.20.46	Tea pipe	1
71.20.47	Anti splash housing	1
71.20.49	Brise jet	1
71.22.50	Outlet nozzle 1.3mm	1
71.28.14	Straight fitting 6-1/4"	1
72.70.16	**Steam outlet SB, assembly**	**1**
71.21.06	Steam outlet	1
71.22.36		1

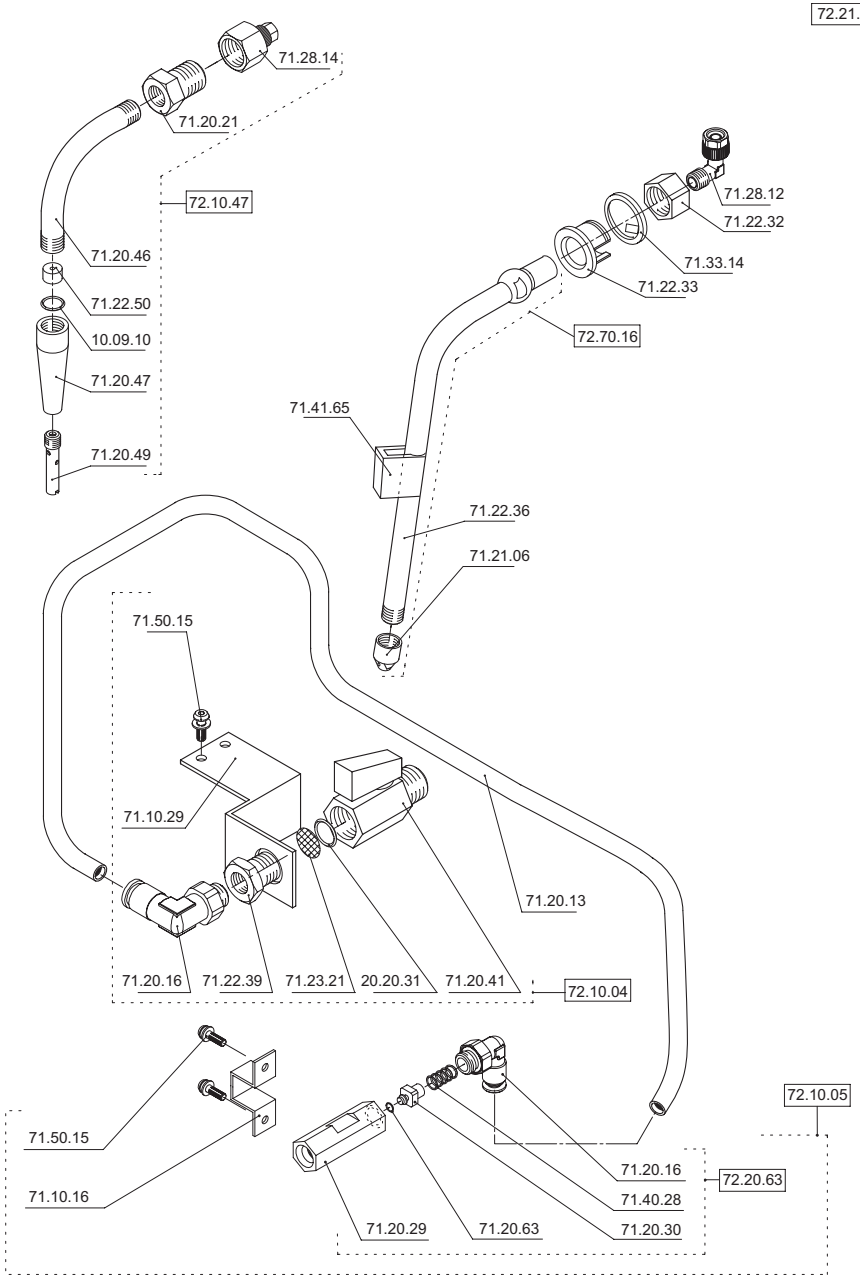

Part No	Description	Quantity
72.21.90	**Water sircuit TS 4.2KW with Sensor, komplett**	**1**
71.15.01	Support plate for NTC connector	1
71.20.13	Pipe ø8/6x1120	1
71.22.32	Pipe ø8/6x310	2
71.22.33	Grasp to steam pipe	2
71.28.12	Elbow fitting 8-1/8"K	1
71.33.14	Grounding ring steam pipe	2
71.33.92	Female connector 2 poles NTC connection	1
71.40.69	Tie-wrap 85/22	1
72.10.04	**Tap assembly**	**1**
20.20.31	O-ring 11x1.5	1
71.10.29	Connector panel	1
71.20.16	Threaded elbow joint 8-1/4''	1
71.20.41	Tap	1
71.22.39	Reduction TS 1/4-3/8"	1
71.23.21	Filter for water inlet	1
71.50.15	Oval head screw M4x8	2
72.10.05	**Cold water connector, assembly**	**1**
71.10.16	Bracket	1
71.50.15	Oval head screw M4x8	2
72.20.63	**Water clip, assembly**	**1**
71.20.16	Threaded elbow joint 8-1/4''	1
71.20.29	Cold water connector	1
71.20.30	Valve	1
71.20.63	O-ring ø2.9x1.78	1
71.40.28	Spring ø7.5x15	1
72.10.47	**Tea outlet CTS, assembly**	**1**
10.09.10	O-ring ø5x1.5	1
71.20.21	Bushing 1/4-1/8	1
71.20.46	Tea pipe	1
71.20.47	Anti splash housing	1
71.20.49	Brise jet	1
71.22.50	Outlet nozzle 1.3mm	1
71.28.14	Straight fitting 6-1/4"	1
72.70.16	**Steam outlet SB, assembly**	**1**
71.21.06	Steam outlet	1
71.22.36	Steam pipe USA	1
72.70.25	**Handle NTC-pipe SB, assembly**	**1**
71.41.07	Cap for steam-handle SB	4
71.41.68	Flange right NTC pipe SB	1
71.41.69	Flange left NTC pipe SB	1
71.41.70	Handle NTC pipe SB	1
71.50.41	Oval head screw ø4x10	1
72.70.66	**NTC-pipe V2, assembly**	**1**
71.22.34	NTC housing and sensor for steam pipe	1
71.22.35	NTC pipe for steam pipe USA	1
71.33.91		1

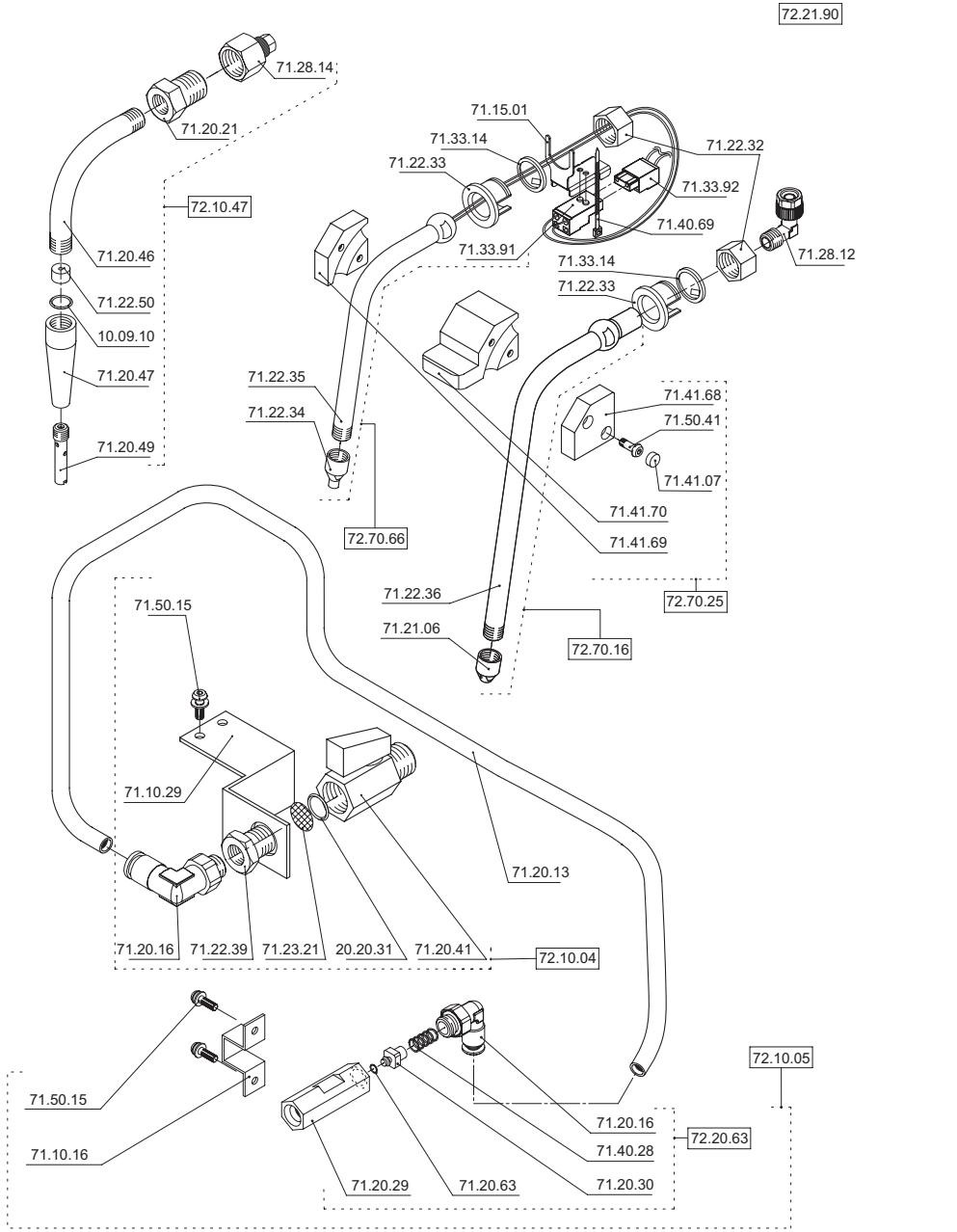

Part No	Description	Quantity
72.22.60	**Water circuit T 3.0KW, assembly**	**1**
71.20.13	Pipe ø8/6x1120	1
72.10.04	**Tap assembly**	**1**
20.20.31	O-ring ø11x1.5	1
71.10.29	Connector panel	1
71.20.16	Threaded elbow joint 8-1/4''	1
71.20.41	Tap	1
71.22.39	Reduction TS 1/4-3/8"	1
71.23.21	Filter for water inlet	1
71.50.15	Oval head screw M4x8	1
72.10.05	**Cold water connector, assembly**	**1**
71.10.16	Bracket	1
71.50.15	Oval head screw M4x8	1
72.20.63	**Water clip, assembly**	**1**
71.20.16	Threaded elbow joint 8-1/4''	1
71.20.29	Cold water connector	1
71.20.30	Valve	1
71.20.63	O-ring ø2.9x1.78	1
71.40.28	Spring ø7.5x15	1
71.20.21	Bushing 1/4-1/8	1
71.20.46	Tea pipe	1
71.20.47	Anti splash housing	1
71.20.48	Seal ø11.5/4x5	1
71.20.49	Anti splash piece	1
71.28.14		1

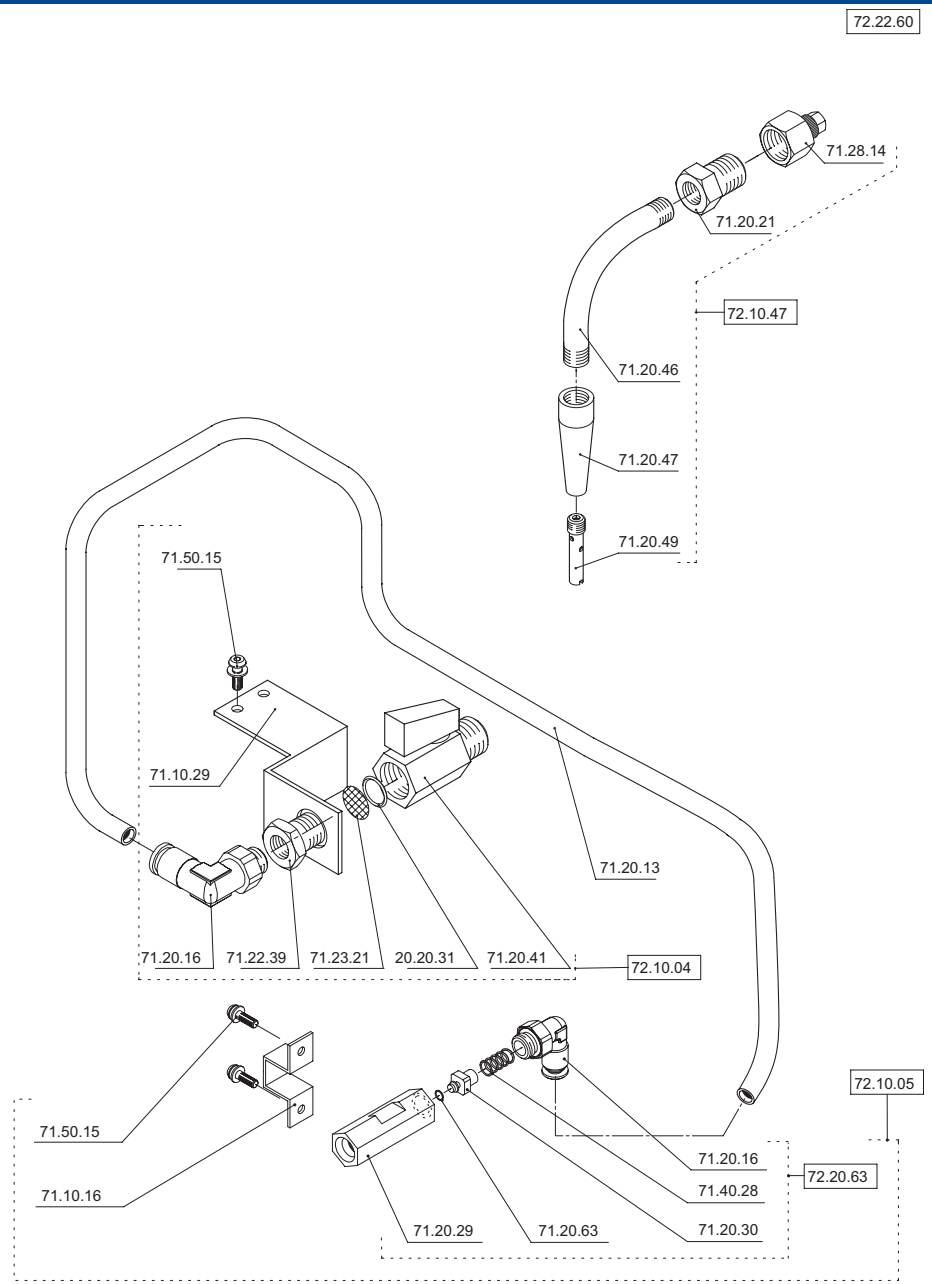

6. Mechanical module

		Page	Revision	
			List	Drawing
Mechanical module		6.1.1 / 6.1.2	REV.4	REV.4
Mechanical module	undercounter	6.2.1 / 6.2.2	REV.4	REV.4
Mechanical module	easyline	6.3.1 / 6.3.2	REV.4	REV.4
Mechanical module	CB5	6.4.1 / 6.4.2	REV.0	REV.0

Part No	Description	Quantity
72.00.00	**Mechanical module 1 mills, assembly**	**1**
71.10.00	Mechanical base plate	1
71.10.14	Connector support	1
71.20.11	Tube ø7/10x170mm	1
71.21.07	Pipe ø4/2x370mm	1
71.30.77	Mounting piece for cable	1
71.30.78	Faston 45°	1
71.32.46	Wiring harness CE mechanical module	1
71.40.04	Belt, 356mm	1
71.50.01	Securing nut M8	1
71.50.03	Countersunk screw M4x12	1
71.50.15	Oval head screw M4x8	2
71.50.39	Knurled screw M4x25	2
71.50.43	Hexagon head cap screw M5x10	5
71.50.45	Hexagon head cap screw M6x16	4
71.50.95	Tallow-drop screw with springring M4x12	2
72.00.07	**Hot water connector assembly for mechanical module**	**1**
71.20.36	Hot water connector for mechanical module	1
71.20.23	Threaded elbow joint 4-1/8''	2
71.20.38	O-ring ø6.75x1.78	4
71.50.41	Oval head screw ø4x10	3
72.00.21	**Drive block, assembly**	**1**
72.00.23	**Mill motor, assembly**	**1**
71.00.33	Pulley ø27	1
71.00.52	Wedge 6x4x25	1
71.30.03	Mill motor	1
71.30.65	Condenser B&W	1
71.40.03	Drive sleeve ø 12x12	1
71.50.09	Cheese head screw M4x12	1
72.00.24	**Belt tensioning roller, assembly**	**1**
71.00.31	Belt tensioning roller	1
71.00.32	Shaft	1
71.00.53	Washer	1
71.40.14	Bearing	1
71.50.08	Nut M10	1
72.00.25	**Fixed piston, assembly**	**1**
72.00.54	**Coffee chamber with piston, assembly**	**1**
72.00.34	**Mill 1 Ceramic, assembly**	**1**
72.00.19	**Mechanical unit 2 mills, assembly**	**1**
71.40.05	Belt 610mm	1
72.00.38	**Mill 2 Ceramic, assembly**	**1**

The other parts correspond to those of mechanical unit 1 mill!

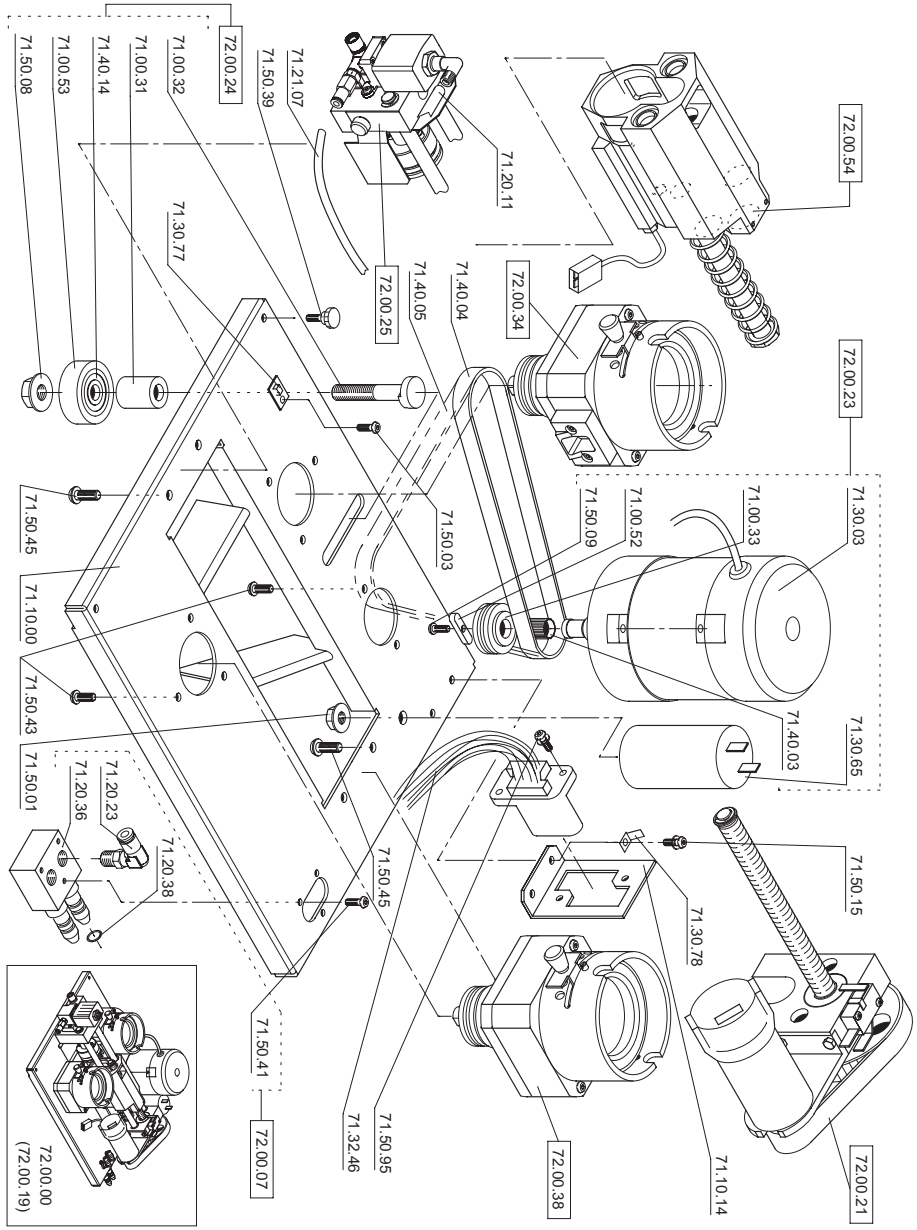

Part No	Description	Quantity
72.80.10	**Mechanical module undercounter**	**1**
71.10.00	Mechanical base plate	1
71.10.14	Connector support	1
71.21.07	Pipe ø4/2x370mm	1
71.30.77	Mounting piece for cable	1
71.30.78	Faston 45°	1
71.32.46	Wiring harness CE mechanical module	1
71.40.04	Belt, 356mm	1
71.50.01	Securing nut M8	1
71.50.03	Countersunk screw M4x12	1
71.50.15	Oval head screw M4x8	2
71.50.39	Knurled screw M4x25	2
71.50.43	Hexagon head cap screw M5x10	5
71.50.45	Hexagon head cap screw M6x16	4
71.50.95	Tallow-drop screw with springring M4x12	2
72.00.07	**Hot water connector assembly for mechanical module**	**1**
71.20.36	Hot water connector for mechanical module	1
71.20.23	Threaded elbow joint 4-1/8''	2
71.20.38	O-ring ø6.75x1.78	4
71.50.41	Oval head screw ø 4x10	3
72.00.21	**Drive block, assembly**	**1**
72.00.23	**Mill motor, assembly**	**1**
71.00.33	Pulley ø27	1
71.00.52	Wedge 6x4x25	1
71.30.03	Mill motor	1
71.30.65	Condenser B&W	1
71.40.03	Drive sleeve ø12x12	1
71.50.09	Cheese head screw M4x12	1
72.00.24	**Belt tensioning roller, assembly**	**1**
71.00.31	Belt tensioning roller	1
71.00.32	Shaft	1
71.00.53	Washer	1
71.40.14	Bearing	1
71.50.08	Nut M10	1
72.00.54	**Coffee chamber with piston, assembly**	**1**
72.00.34	**Mill 1 Ceramic, assembly**	**1**
72.80.12	**Fixed piston undercounter, assembly**	**1**
72.80.11	**Mechanical unit 2 mills undercounter, assembly**	**1**
71.40.05	Belt 610mm	1
72.00.38	**Mill 2 Ceramic, assembly**	**1**

The other parts correspond to those of mechanical unit 1 mill!

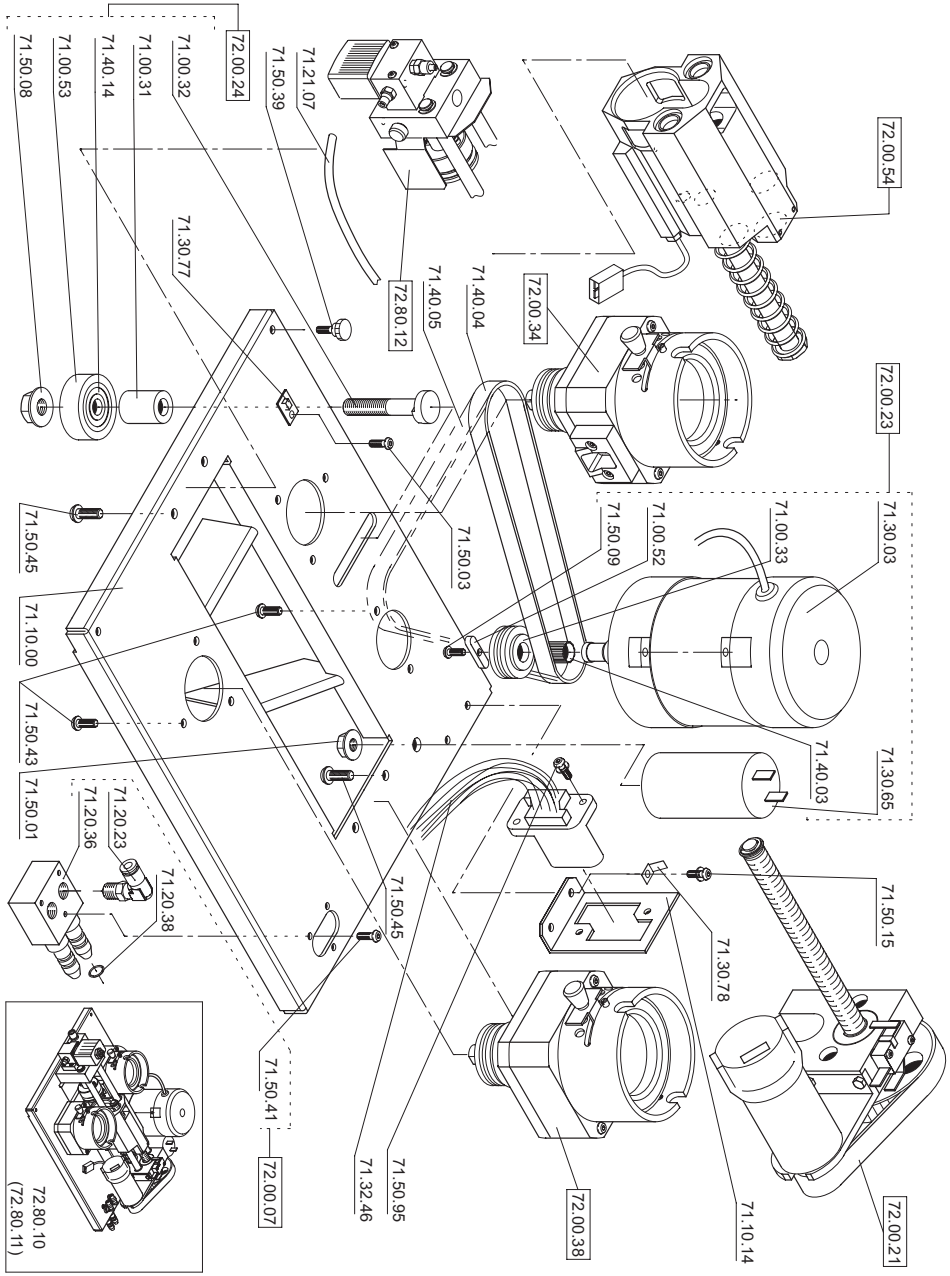

Part No	Description	Quantity
72.00.47	**Mecanical module 1 Mill easy, assembly**	**1**
73.10.49	Mecanical base plate easy	1
71.10.14	Connector support	1
71.30.77	Mounting piece for cable	1
71.30.78	Foston 45°	1
71.31.55	Relay 25A	1
71.31.78	Wiring hardness for mecanical module hv	1
71.31.79	Wiring hardness for relay easy	1
71.31.95	Cover to Relay 25A	1
71.40.04	Belt 356mm	1
71.50.04	Cheese head screw M4x8	2
71.50.05	Countersunc screw M4x8	1
71.50.06	Nut M8	1
71.50.09	Cheese head screw 4x12	2
71.50.24	Security washer M4	2
71.50.39	Knurlet screw M4x25	2
71.50.43	Hexagon head cap screw M5x10	3
71.50.45	Hexagon head cap screw M6x16	4
72.00.21	**Drive block, assembly**	**1**
72.00.23	**Mill motor, assembly**	**1**
71.00.33	Pulley ø27	1
71.00.52	Wedge 6x4x25	1
71.30.03	Mill motor	1
71.30.65	Condenser B&W	1
71.40.03	Drive sleeve ø12x12	1
71.50.09	Cheese head screw M4x12	1
72.00.24	**Belt tensioning roller, assembly**	**1**
71.00.31	Belt tensioning roller	1
71.00.32	Shaft	1
71.00.53	Washer	1
71.40.14	Beauring	1
71.50.08	Nut M10	1
72.00.34	**Mill 1 Ceramic, assembly**	**1**
72.00.35	**Clip mecanic easy, assembly**	**1**
71.20.23	Threaded elbow joint 4-1/8"	1
71.20.36	Hot water connector for mecanical module	1
71.20.38	O-ring ø6.75x1.78	4
71.50.41	Tollow-drop screw ø4x10	2
72.00.40	**Fixed piston easy, assembly**	**1**
72.01.08	**Drive block, assembly**	**1**

72.00.45	**Mecanical unit 2 Mills, assembly**	**1**
71.31.55	Relay 25A	1
71.31.80	Wiring harness mecanical module hv	1
71.31.95	Cover to Relay 25A	1
71.40.05	Belt 610 mm	1
72.00.38	**Mill 2 Ceramic, assembly**	**1**

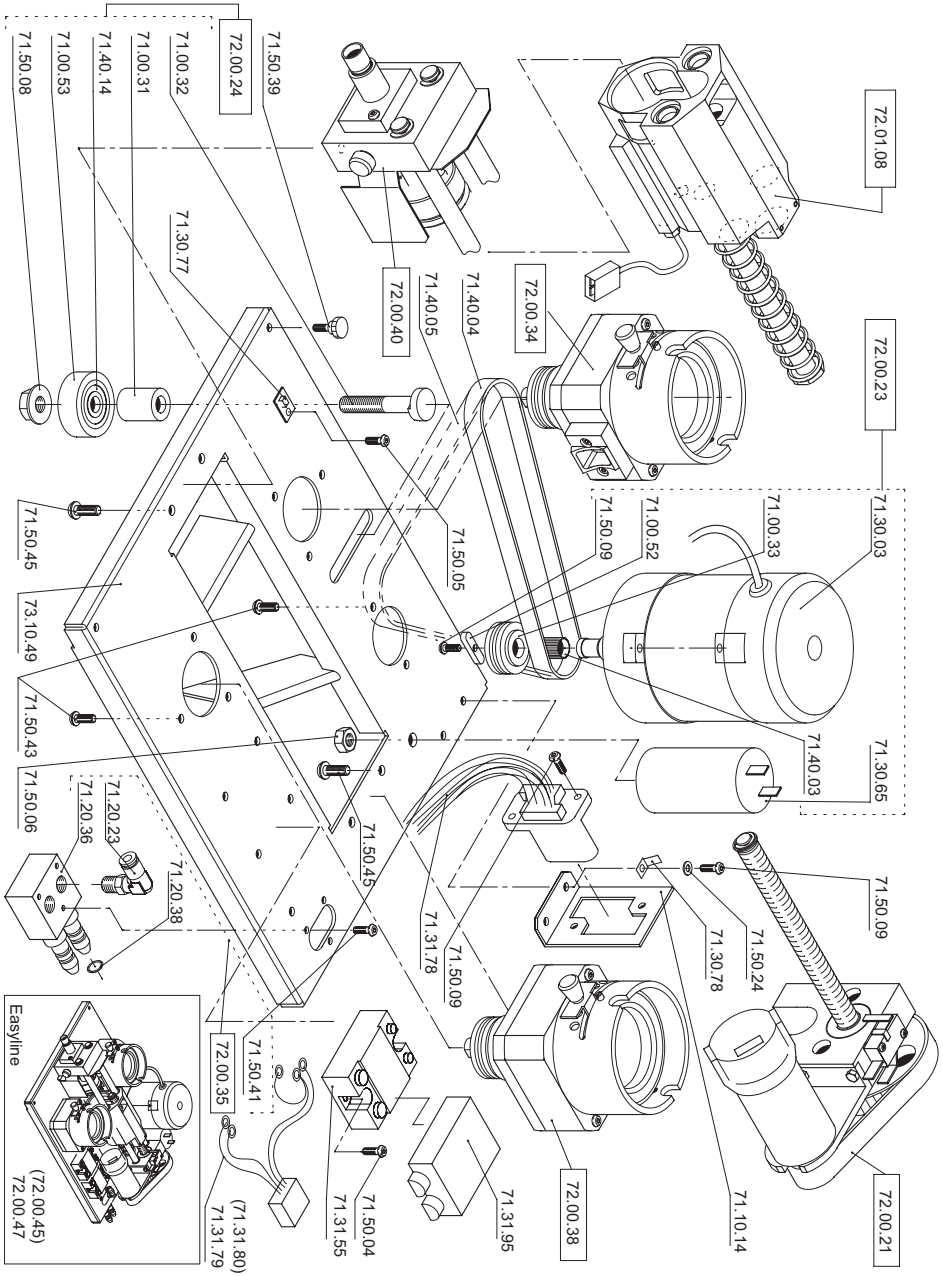

Part No	Description	Quantity
72.01.95	**Mechanical module 2 mills, assembly**	**1**
71.10.00	Mechanical base plate	1
71.10.14	Connector support	1
71.20.11	Tube ø7/10x170mm	1
71.21.07	Pipe ø4/2x370mm	1
71.30.77	Mounting piece for cable	1
71.30.78	Faston 45°	1
71.32.46	Wiring harness CE mechanical module	1
71.40.05	Belt, 610mm	1
71.50.01	Securing nut M8	1
71.50.03	Countersunk screw M4x12	1
71.50.15	Oval head screw M4x8	2
71.50.39	Knurled screw M4x25	2
71.50.43	Hexagon head cap screw M5x10	5
71.50.45	Hexagon head cap screw M6x16	4
71.50.95	Tallow-drop screw with springring M4x12	2
72.00.07	**Hot water connector assembly for mechanical module**	**1**
71.20.36	Hot water connector for mechanical module	1
71.20.23	Threaded elbow joint 4-1/8''	2
71.20.38	O-ring ø6.75x1.78	4
71.50.41	Oval head screw ø4x10	3
72.00.21	**Drive block, assembly**	**1**
72.00.23	**Mill motor, assembly**	**1**
71.00.33	Pulley ø27	1
71.00.52	Wedge 6x4x25	1
71.30.03	Mill motor	1
71.30.65	Condenser B&W	1
71.40.03	Drive sleeve ø 12x12	1
71.50.09	Cheese head screw M4x12	1
72.00.24	**Belt tensioning roller, assembly**	**1**
71.00.31	Belt tensioning roller	1
71.00.32	Shaft	1
71.00.53	Washer	1
71.40.14	Bearing	1
71.50.08	Nut M10	1
72.00.25	**Fixed piston, assembly**	**1**
72.00.54	**Coffee chamber with piston, assembly**	**1**
72.01.94	**Mill 1 left Ceramic, assembly**	**1**
72.01.93	**Mill 2 right Ceramic, assembly**	**1**

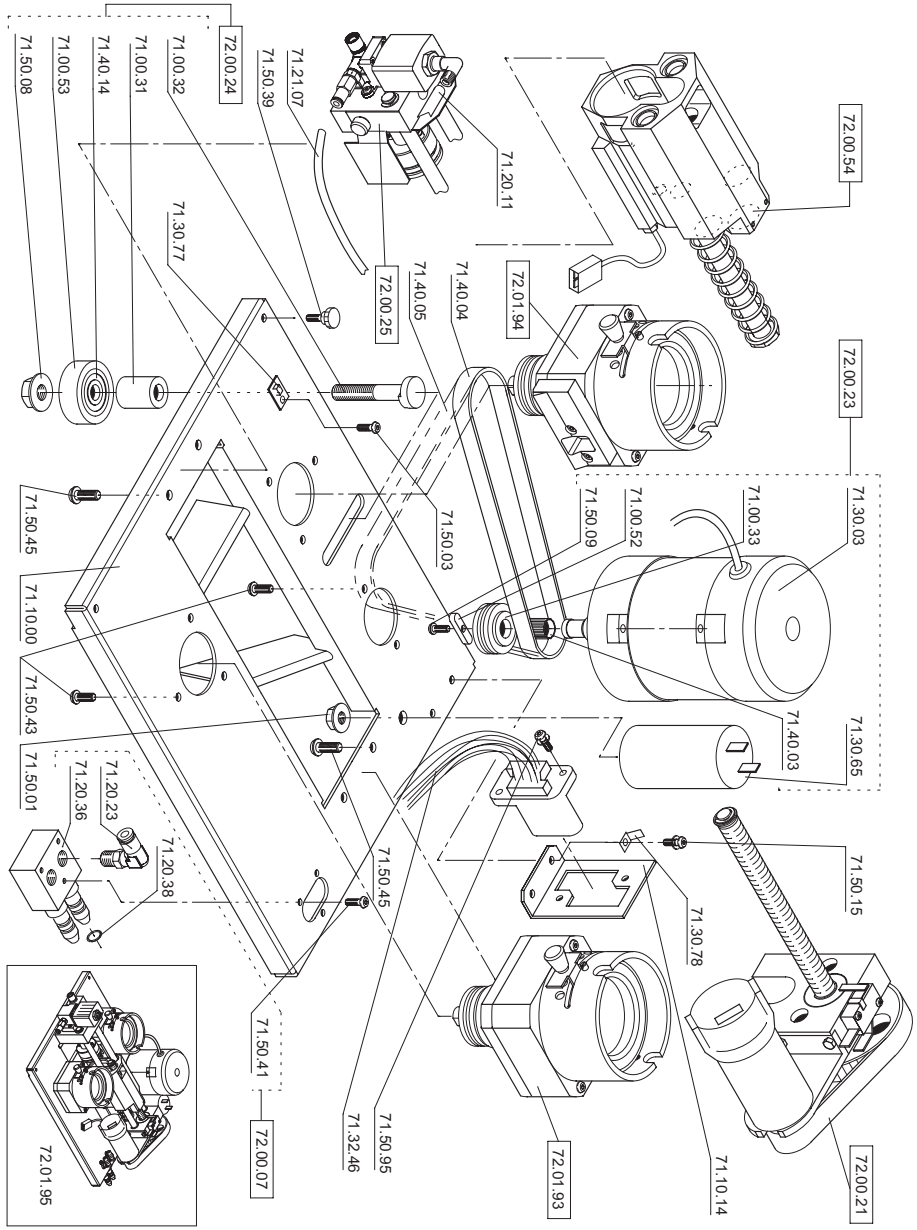

7. Mill

		Page	Revision	
			List	Drawing
Mill	ceramic mill desk	7.1.1 / 7.1.2	REV.4	REV.4
Mill	steel mill desk	7.2.1 / 7.2.2	REV.4	REV.4
Mill	ceramic mill desk CB5	7.3.1 / 7.3.2	REV.0	REV.0

Part No	Description	Quantity
72.00.34	**Mill 1 left, assembly**	**1**
71.00.24	Spacer ø20	1
71.00.26	Mill wheel lower support	1
71.00.27	Mill wheel upper support	1
71.00.41	Bean guide disc ø73x9.5	1
71.00.46	Lower mill body	1
71.00.48	Upper mill body	1
71.00.49	Powder exit plate for mill	1
71.20.00	O-ring ø67x2	1
71.41.72	Mill wheel pair 1, left	1
71.40.10	Ball bearing for mill	2
71.50.01	Securing nut M8	1
71.50.02	Oval head screw M3x8 (self tapping)	2
71.50.09	Cheese head screw M4x12	2
71.50.14	Oval head screw M4x35	2
71.50.20	set screw M4x8	2
71.50.43	Hexagon head cap screw M5x10	3
71.51.00	Cheese head screw M4x9	6
71.51.03	Washer M4/3.4x8x0.8	6
72.00.26	**Shaft with pulley**	**1**
72.40.77	**Handle for mill, assembly**	**1**
71.10.07	Handle for mill	1
71.41.67	Mill handle V2	1
72.00.38	**Mill 2, assembly**	**1**
71.41.60	Mill wheel pair 2	1

The other parts correspond to those of mill 1!

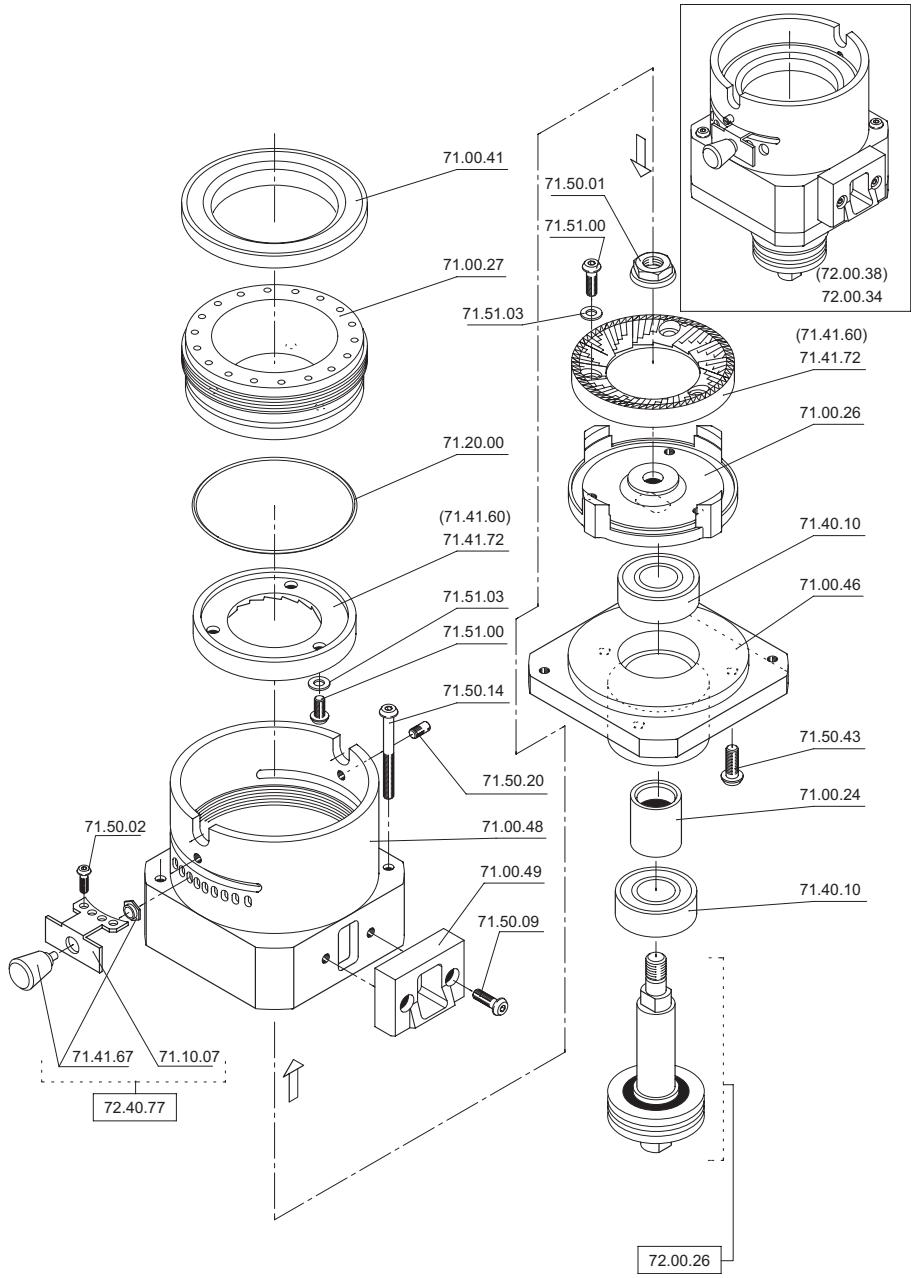

Part No	Description	Quantity
72.00.30	**Mill 1 left steel, assembly**	**1**
71.00.24	Spacer ø20	1
71.00.26	Mill wheel lower support	1
71.00.27	Mill wheel upper support	1
71.00.41	Bean guide disc ø73x9.5	1
71.00.46	Lower mill body	1
71.00.48	Upper mill body	1
71.00.49	Powder exit plate for mill	1
71.20.00	O-ring ø67x2	1
71.40.00	Mill wheel pair 1, left	1
71.40.10	Ball bearing for mill	2
71.50.01	Securing nut M8	1
71.50.02	Oval head screw M3x8 (self tapping)	2
71.50.09	Cheese head screw M4x12	2
71.50.14	Oval head screw M4x35	2
71.50.20	set screw M4x8	2
71.50.43	Hexagon head cap screw M5x10	3
71.51.00	Cheese head screw M4x9	6
72.00.26	**Shaft with pulley**	**1**
72.40.77	**Handle for mill, assembly**	**1**
71.10.07	Handle for mill	1
71.41.67	Mill handle V2	1
72.00.31	**Mill 2 steel, assembly**	**1**
71.40.01	Mill wheel pair 2, right	1

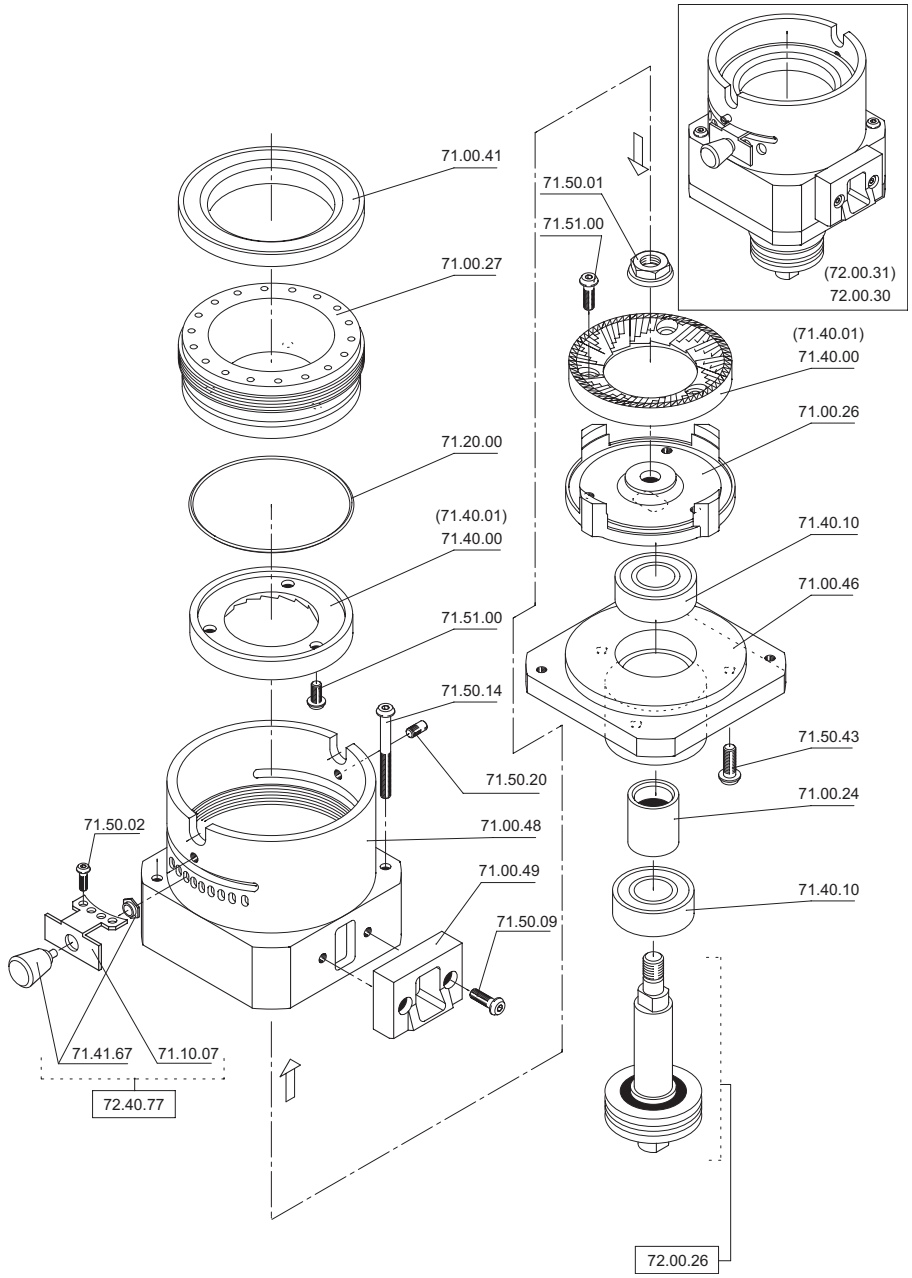

Part No	Description	Quantity
72.01.94	**Mill 1 left, assembly**	**1**
71.00.24	Spacer ø20	1
71.00.26	Mill wheel lower support	1
71.00.27	Mill wheel upper support	1
71.00.41	Bean guide disc ø73x9.5	1
71.00.46	Lower mill body	1
71.00.48	Upper mill body	1
71.05.49	Powder exit plate for mill, left	1
71.20.00	O-ring ø67x2	1
71.41.72	Mill wheel pair 1, left	1
71.40.10	Ball bearing for mill	2
71.50.01	Securing nut M8	1
71.50.02	Oval head screw M3x8 (self tapping)	2
71.50.09	Cheese head screw M4x12	2
71.50.14	Oval head screw M4x35	2
71.50.20	set screw M4x8	2
71.50.43	Hexagon head cap screw M5x10	3
71.51.00	Cheese head screw M4x9	6
71.51.03	Washer M4/3.4x8x0.8	6
72.00.26	**Shaft with pulley**	**1**
72.40.77	**Handle for mill, assembly**	**1**
71.10.07	Handle for mill	1
71.41.67	Mill handle V2	1
72.01.93	**Mill 2 right, assembly**	**1**
71.41.60	Mill wheel pair 2 right	1
71.05.48	Powder exit plate for mill, right	1

The other parts correspond to those of mill 1 left!

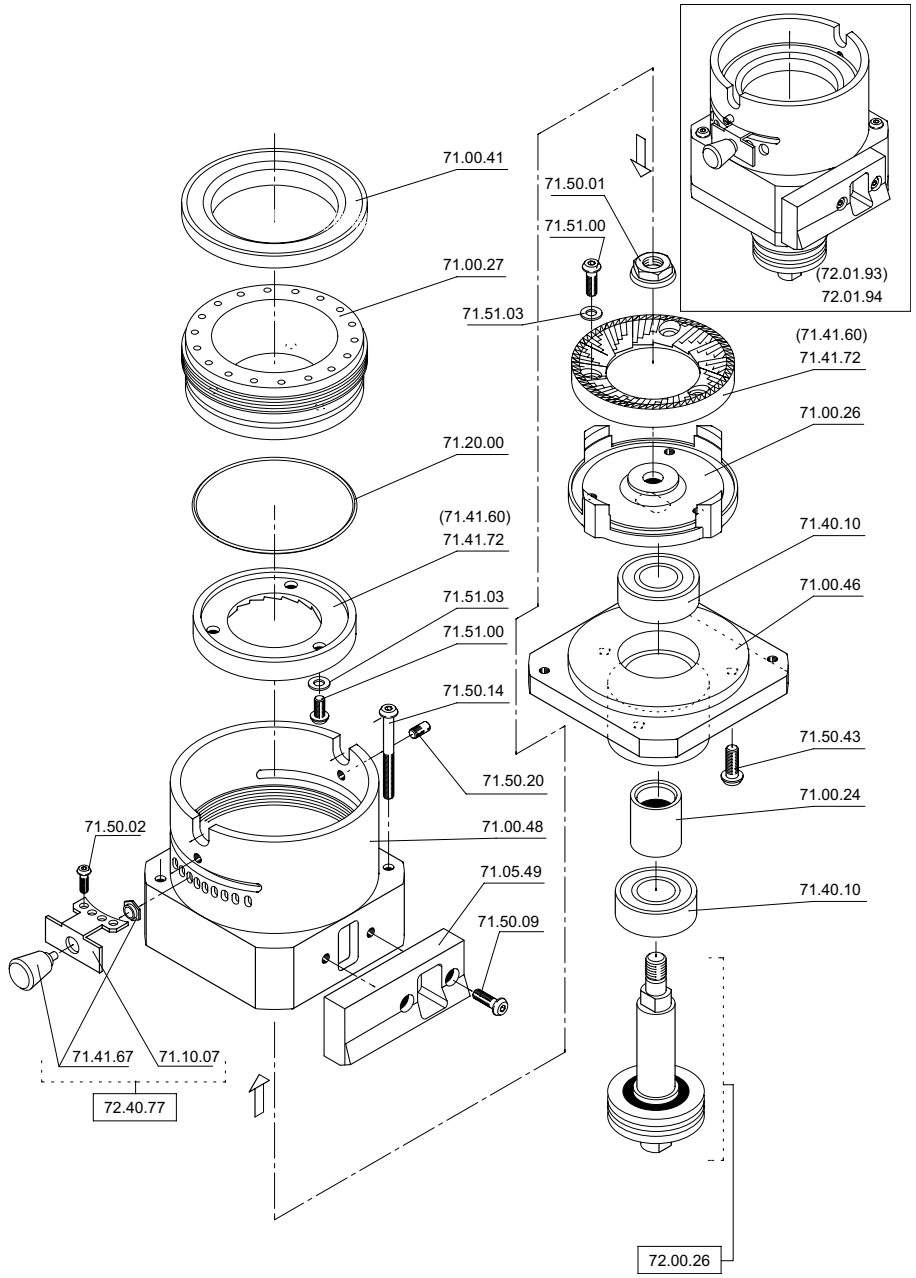

8. Fixed piston

			Page	Revision	
				List	Drawing
Fixed piston		V1	8.1.1 / 8.1.2	REV.4	REV.4
Fixed piston with cuff		V2	8.2.1 / 8.2.2	REV.4	REV.4
Fixed piston with cuff	undercounter	V2	8.3.1 / 8.3.2	REV.4	REV.4
Fixed piston with o-ring	easyline	V1	8.4.1 / 8.4.2	REV.4	REV.4
Fixed piston with cuff	easyline	V2	8.4.3 / 8.4.4	REV.4	REV.4

Part No	Description	Quantity
72.00.25	**Fixed piston, assembly**	**1**
71.00.15	Shaft for coffee chamber	2
71.00.16	Block	1
71.10.77	Protection panel	1
71.20.11	Tube ø7/10x170mm	1
71.20.97	Threaded elbow joint 1/8''	1
71.40.23	Seal for cartrige	1
71.50.33	Circlips ø8	8
71.50.45	Hexagon head cap screw M6x16	2
71.50.64	Knurled screw M4x6	2
72.00.12	**Heating element 19W, assembly**	**1**
72.00.15	**Piston, assembly**	**1**
71.00.20	Piston body	1
71.00.21	Piston head	1
71.00.43	Spacer screw M4	2
71.00.50	Spacer	1
71.20.02	O-ring ø34.52x3.53	1
71.20.04	O-ring ø6.07x1.78	2
71.20.40	O-ring ø36x1.5	1
71.20.57	O-ring ø10.82x1.78	1
71.20.58	O-ring ø14x1.78	1
71.21.12	Tube ø6/4x88	1
71.40.07	Spring ø11x36	1
71.40.17	Filter assembly	1
71.50.05	Countersunk screw M4x8	1
71.50.30	Circlips ø10	1
72.20.51	**Seal ø11.5/6 x 5**	**1**
71.50.27	Washer M4	2
71.50.95	Tallo-drop screw with springring M4x12	2
72.20.17	**Check valve, assembly**	**1**
71.22.15	Washer for spring	1
71.22.16	Seal 1/8''	2
71.22.19	Straight connection 4-1/8''	1
71.22.43	Valve housing check valve V2	1
72.20.30	**Spring with valve seal**	**1**
71.22.17	Valve seal	1
71.41.62	Spring ø5.5x8.3x0.3	1
72.20.18	**Foambush, assembly**	**1**
72.20.50	**Airvalve with PVDF block**	**1**
71.22.11	Block PVDF V2	1
72.20.49	**Solenoid valve for airvalve**	**1**
71.22.14	Seal for valves	1
71.22.25	O-ring ø17.17x1.78	1
71.22.27	Socle for valve	1
71.23.18	Plunger for valve	1
71.22.91	Coil for valve	1
71.22.92	Plunger guide 3-way	1
71.22.93	Nut for valve	1
71.50.99		4

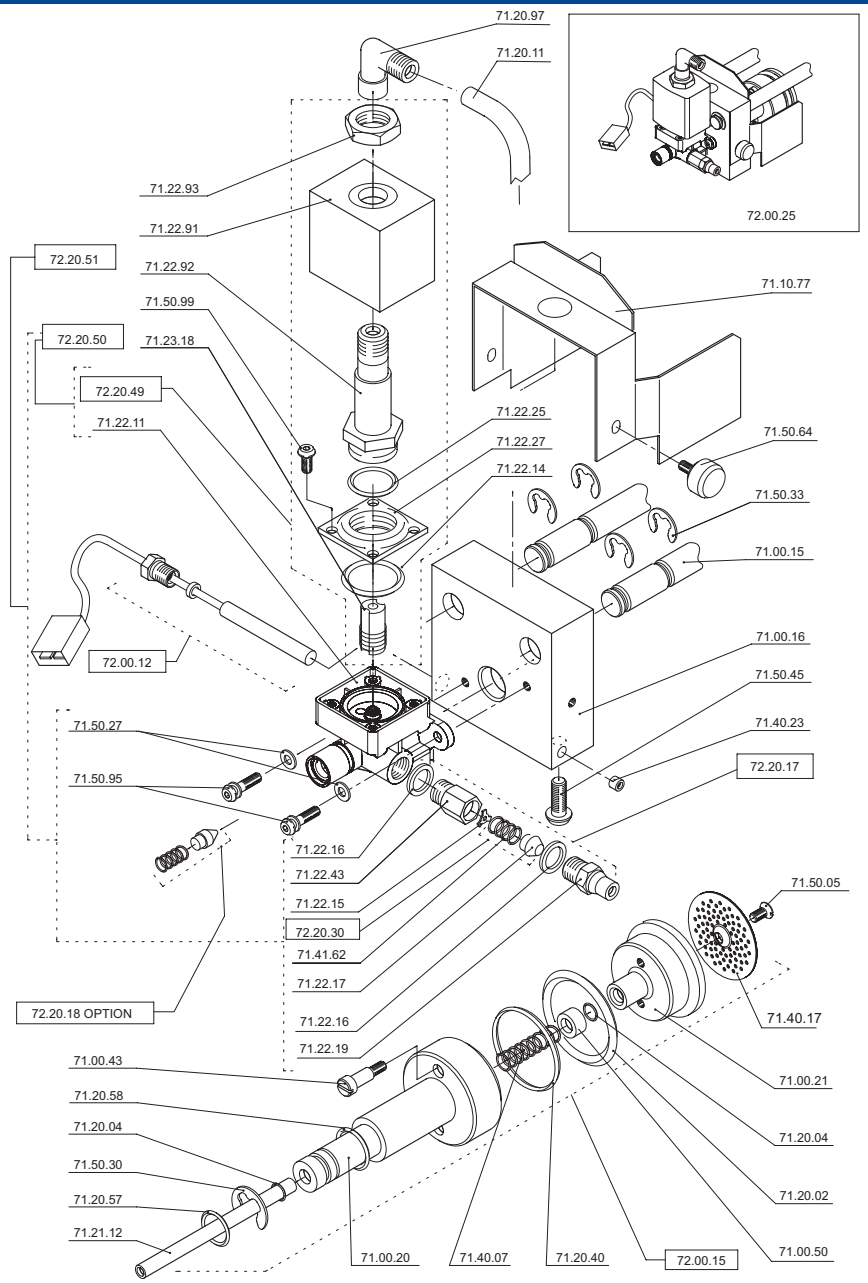

Part No	Description	Quantity
72.00.55	**Fixed piston V2, assembly**	**1**
71.00.15	Shaft for coffee chamber	2
71.00.16	Block	1
71.10.77	Protection panel	1
71.20.11	Tube ø7/10x170mm	1
71.20.97	Threaded elbow joint 1/8''	1
71.40.23	Seal for cartrige	1
71.50.33	Circlips ø8	8
71.50.45	Hexagon head cap screw M6x16	2
71.50.64	Knurled screw M4x6	2
72.00.12	**Heating element 19W, assembly**	**1**
72.00.51	**Piston V2, assembly**	**1**
71.00.43	Spacer screw M4	2
71.00.81	Piston body for piston V2	1
71.00.82	Piston head for piston V2	1
71.20.04	O-ring ø6.07x1.78	2
71.20.57	O-ring ø10.82x1.78	1
71.20.58	O-ring ø14x1.78	1
71.21.12	Tube ø6/4x88	1
71.23.58	Cuff for piston V2	1
71.40.07	Spring ø11x36	1
71.40.17	Filter, assembly	1
71.50.05	Countersunk screw M4x8	1
71.50.30	Circlips ø10	1
72.20.18	**Foambush, assembly**	**1**
72.20.51	**Airvalve Lucifer, assembly**	**1**
72.20.50	**Airvalve with PVDF-block**	**1**
72.20.49	**Solenoid valve for airvalve**	**1**
71.22.14	Seal for valves	1
71.22.25	O-ring 17.17x1.78	1
71.22.27	Socle for valve	1
71.22.91	Coil for valve	1
71.22.92	Plunger guide 3-way	1
71.22.93	Nut for valve	1
71.23.18	Plunger for valve	1
71.50.99	Screw for valve	4
71.22.11	Block PVDF V2	1
72.20.17	**Check valve, assembly**	**1**
71.22.16	Seal 1/8''	2
71.27.99	Straight fitting 4-1/8"	1
72.20.84	**Valve check air valve block**	**1**
71.50.27	Washer M4	2
71.50.95		2

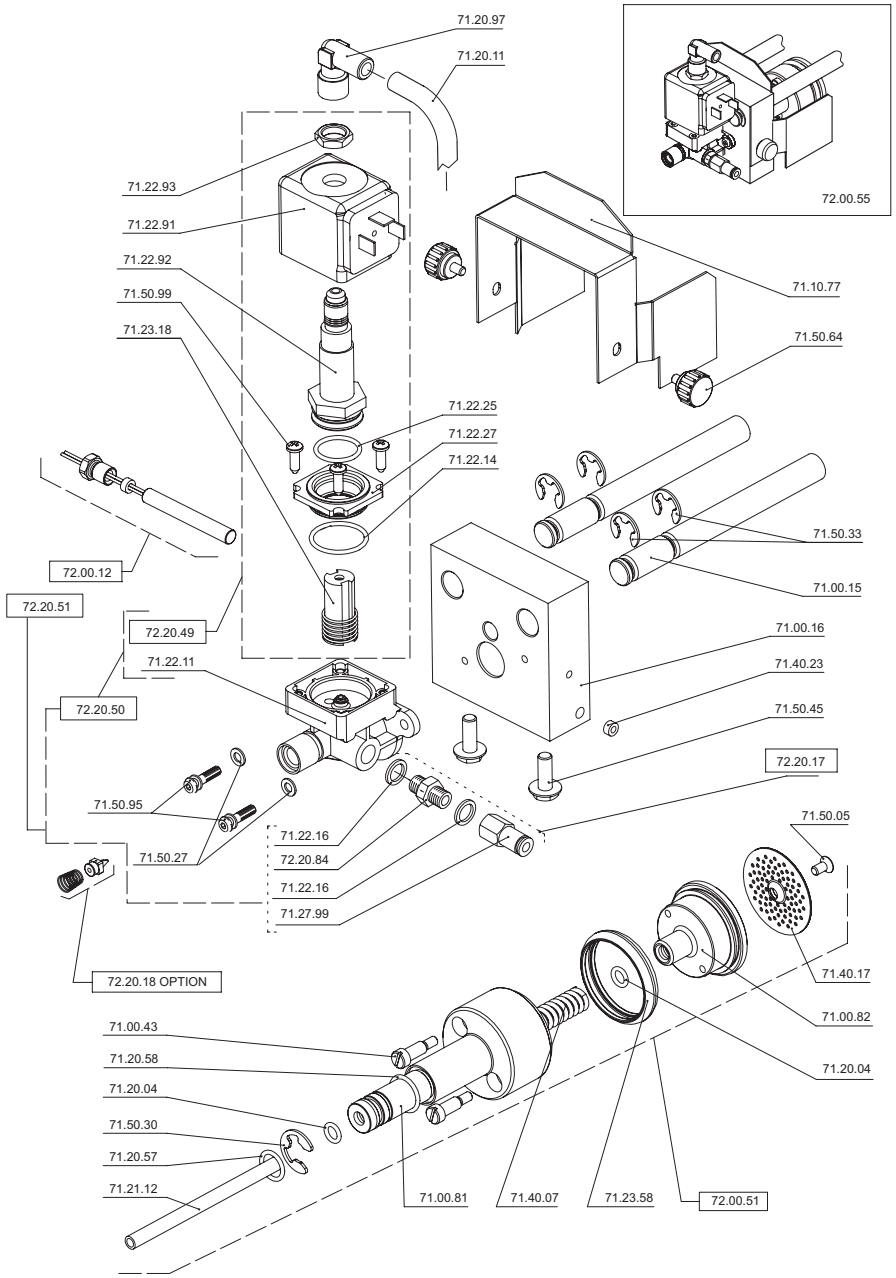

Part No	Description	Quantity
72.80.12	**Fixed piston undercounter, assembly**	**1**
71.10.77	Protection panel	1
71.21.07	Pipe ø4/2x385	1
71.40.23	Seal for cartridge	1
71.29.50	Tube ø7/10x800	1
71.50.64	Knurled screw M4x8	2
72.00.12	**Heating element 19W, assembly**	**1**
72.00.13	**Shaft for coffee chamber, assembly**	**1**
71.00.15	Shaft for coffee chamber	2
71.50.33	Circlips ø8	8
72.00.16	**Block, assembly**	**1**
71.00.16	Block	1
71.50.45	Hexagon head cap screw M6x16	2
72.00.51	**Piston V2, assembly**	**1**
71.00.43	Spacer screw M4	2
71.00.81	Piston body for piston V2	1
71.00.82	Piston head for piston V2	1
71.20.04	O-ring ø6.07x1.78	1
71.20.57	O-ring ø10.82x1.78	1
71.20.58	O-ring ø14x1.78	1
71.21.12	Tube ø6/4x88	1
71.23.58	Cuff for piston V2	1
71.40.07	Spring ø11x36	1
71.40.17	Filter, assembly	1
71.50.05	Countersunk screw M4x8	1
71.50.30	Circlips ø10	1
72.80.13	**Solenoid valve (3-way) and block undercounter, assembly**	**1**
72.20.02	**Solenoid valve (3-way), assembly**	**1**
71.20.62	Plugger guide 3 ways	1
71.20.79	Countersunk screw M4x10	4
71.21.26	O-ring for spool sluice	1
71.21.27	Seal for 2- and 3-way valve	1
71.21.29	Valve coil	1
71.22.48	Flange for valve pipe	1
71.24.24	Plunger for brew valve Bürkert	1
72.80.31	**Connection parts for solenoid valve, assembly**	**1**
71.20.03	Threaded joint 4-1/8''	1
71.20.21	Bushing 1/4 -1/8	1
71.21.86	Block PVDF undercounter	1
71.22.03	Outlet connection undercounter	1
71.24.00	Threaded joint 10-1/4''	1
71.28.29	Union Nut M14x1	1
71.50.29	Spring washer M4	2
71.50.81		2

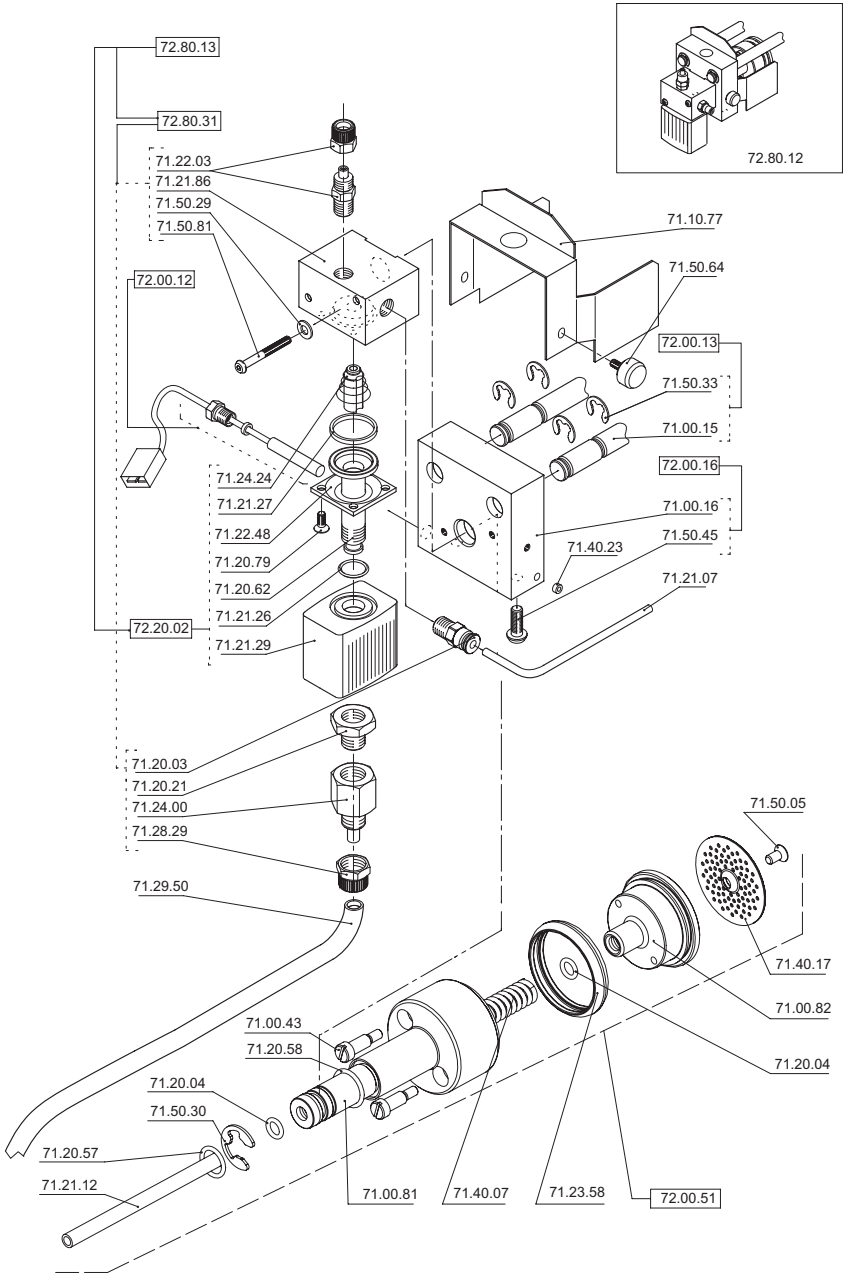

Part No	Description	Quantity
72.00.40	**Fixed piston easy, assembly**	**1**
71.00.70	Clip for piston-outlet easy	1
71.10.77	Protection panel	1
71.22.41	Piston outlet easy	1
71.50.12	Oval head screw M4x16	2
71.50.29	Spring wsher M4	2
71.50.64	Knurlet screw M4x6	2
72.00.12	**Heating element 19W, assembly**	**1**
72.00.13	**Shaft for coffee chamber**	**1**
71.00.15	Shaft for coffee chambe	2
71.50.33	Circlips ø8	4
72.00.15	**Piston, assembly**	**1**
71.00.20	Piston body	1
71.00.21	Piston head	1
71.00.43	Spacer screw	2
71.00.50	Spacer	1
71.20.02	O-ring ø34.52x3.53	1
71.20.04	O-ring ø6.07x1.78	2
71.20.40	O-ring ø36x1.5	1
71.20.57	O-ring ø10.82x1.78	1
71.20.58	O-ring ø14x1.78	1
71.21.12	Tube ø6/4x88	1
71.40.07	Spting ø11x36	1
71.40.17	Filter, assembly	1
71.50.05	Counter sunk screw M4x8	1
71.50.30	Circlips ø10	1
72.00.16	**Block, assembly**	**1**
71.00.16	Block	1
71.40.23	Seal for cortridge	1
71.50.45		2

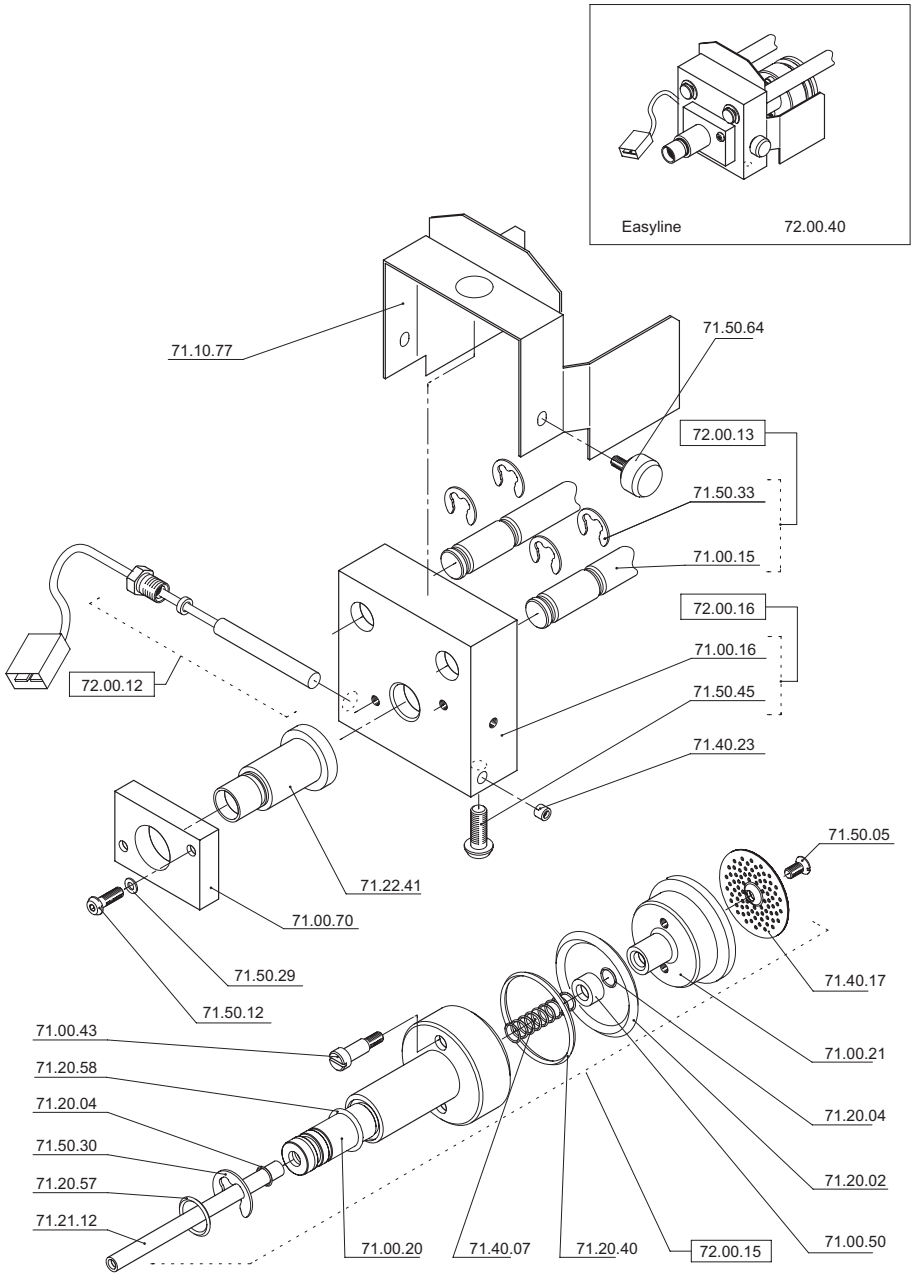

Part No	Description	Quantity
72.00.83	**Fixed piston easy, assembly**	**1**
71.00.70	Clip for piston-outlet easy	1
71.10.77	Protection panel	1
71.22.41	Piston outlet easy	1
71.50.12	Oval head screw M4x16	2
71.50.29	Spring wsher M4	2
71.50.64	Knurlet screw M4x6	2
72.00.12	**Heating element 19W, assembly**	**1**
72.00.13	**Shaft for coffee chamber**	**1**
71.00.15	Shaft for coffee chambe	2
71.50.33	Circlips ø8	4
72.00.51	**Piston V2, assembly**	**1**
71.00.43	Spacer screw M4	2
71.00.81	Piston body for piston V2	1
71.00.82	Piston head for piston V2	1
71.20.04	O-ring ø6.07x1.78	1
71.20.57	O-ring ø10.82x1.78	1
71.20.58	O-ring ø14x1.78	1
71.21.12	Tube ø6/4x88	1
71.23.58	Cuff for piston V2	1
71.40.07	Spring ø11x36	1
71.40.17	Filter, assembly	1
71.50.05	Countersunk screw M4x8	1
71.50.30	Circlips ø10	1
72.00.16	**Block, assembly**	**1**
71.00.16	Block	1
71.40.23	Seal for cortridge	1
71.50.45		2

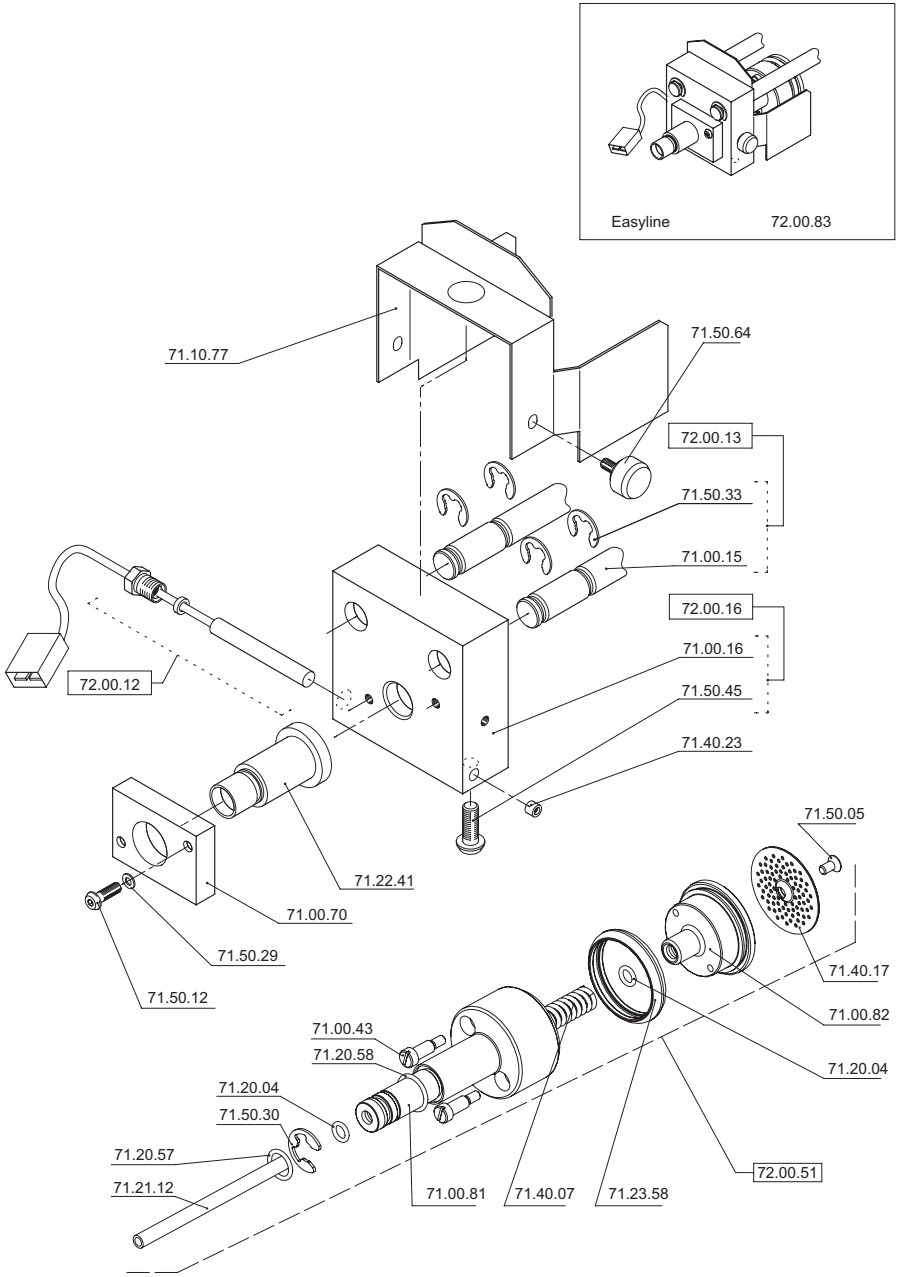

9. Drive block

	Page	Revision	
		List	Drawing
Drive block	9.1.1 / 9.1.2	REV.4	REV.4

Part No	Description	Quantity
72.00.21	**Drive block, assembly**	**1**
71.40.21	Tothed drive belt	1
72.00.04	**Reset micro switch, assembly**	**1**
71.30.01	Reset micro switch	1
71.40.41	Nylon washer	2
71.50.19	Set screw M3x20	2
71.50.35	Circlips ø3	2
72.00.05	**Electric motor 24V DC, assembly**	**1**
71.30.02	Motor 24V DC translation	1
71.50.95	Tallow-drop screw with springring M4x12	3
72.00.06	**Block and drive spindle, assembly**	**1**
71.00.07	Rear block	1
71.00.08	Toothed pulley wheel 48T	1
71.00.09	Spacer ø23/10x4	1
71.00.71	Drive spindle version 2	1
71.00.72	Bearing protection washer V2 ø29/10x2.5	1
71.20.05	Washer	1
71.40.06	Drive sleeve ø10x12	1
71.40.11	Ball bearing for block	1
71.40.12	Axial bearing for block	1
71.40.80	Washer ø30x0.3	2
71.41.75	Springring ø10	1
71.50.32	Circlips ø7	1
71.50.45	Hexagon head cap screw M6x16	2
71.50.46		1

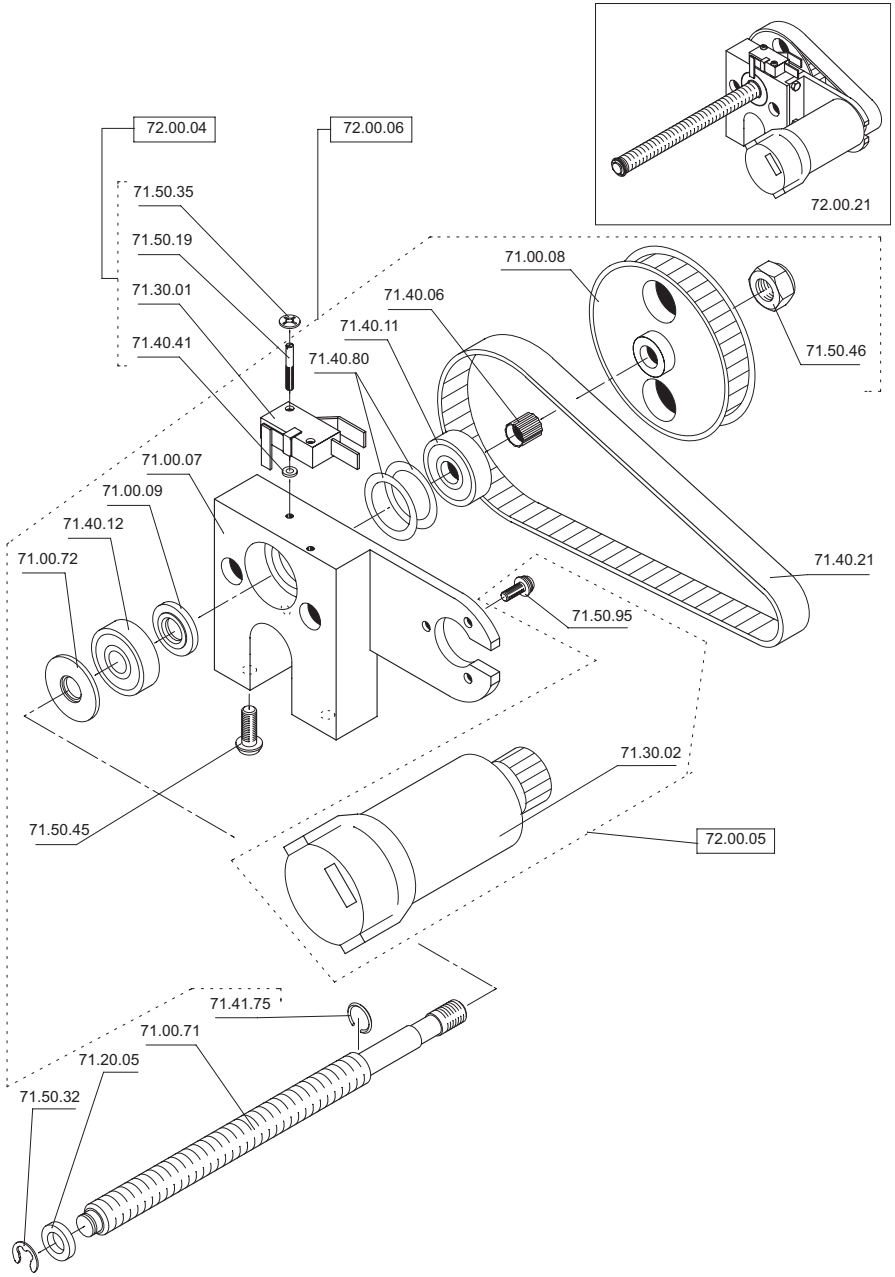

10. Brew chamber with piston

			Page	Revision	
				List	Drawing
Brew chamber with piston		V1	10.1.1 / 10.1.2	REV.4	REV.4
Brew chamber with piston		V2	10.2.1 / 10.2.2	REV.4	REV.4
Brew chamber with piston	easyline	V2	10.3.1 / 10.3.2	REV.4	REV.4

Part No	Description	Quantity
72.00.28	**Brew chamber with piston V1, assembly**	**1**
71.00.14	Spring stop nut	1
71.00.58	Cap for coffee chamber	1
71.21.08	Pipe ø4/2x298	1
71.40.13	Spring ø12.5x120	1
71.40.38	Spring ø13.5x120	1
71.50.63	Oval head screw M3x30	1
72.00.09	**Mounting piston, assembly**	**1**
71.00.12	Piston shaft	1
71.00.13	Piston head	1
71.00.51	Filter support ring	1
71.20.01	Scraper ring	1
71.20.06	O-ring ø10.69x3.53	1
71.40.17	Filter, assembly	1
71.40.74	Interior filter, assembly	1
71.50.05	Countersunk screw, M4x8	1
72.00.11	**Heating element 23W assembly for coffeec.**	**1**
72.00.29	**Brew chamber, assembly**	**1**
71.00.03	Trapezoidal nut	1
71.00.60	Coffee chamber	1
71.20.03	Threaded joint 4-1/8''	1
71.40.09	Drive sleeve ø20x16	1
71.40.18	Guide sleeve P10	4
71.40.19	Scraper ring ø12x19x3	4
71.40.27	Guide sleeve P11	1
71.50.36		2

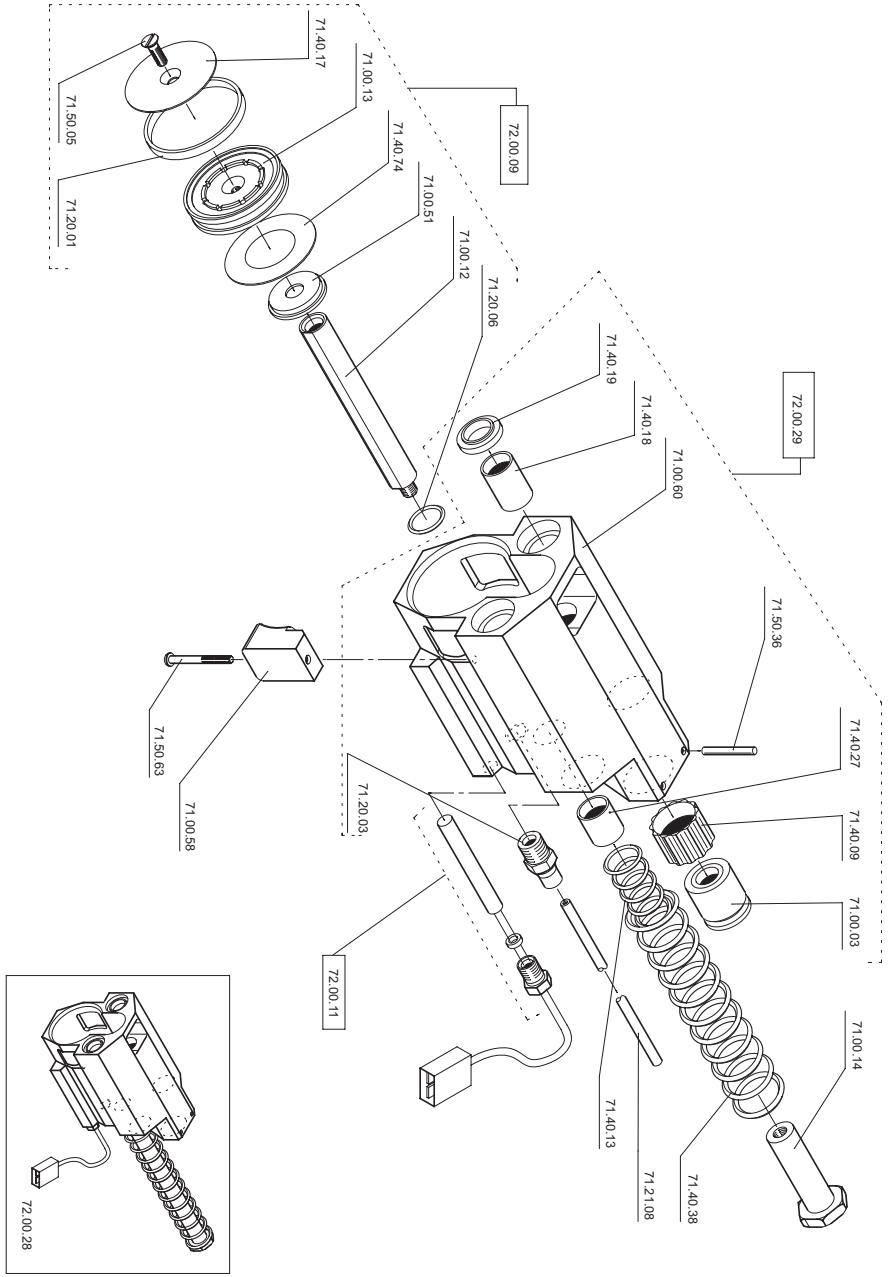

Part No	Description	Quantity
72.00.54	**Brew chamber with piston, assembly**	**1**
71.00.14	Spring stop nut	1
71.00.58	Cap for coffee chamber	1
71.21.08	Pipe ø4/2x298	1
71.40.13	Spring ø12.5x120	1
71.40.38	Spring ø13.5x120	1
71.50.63	Oval head screw M3x30	1
72.00.11	**Heating element 23W assembly for coffeec.**	**1**
72.00.41	**Brew chamber V2, assembly**	**1**
71.00.03	Trapezoidal nut	1
71.00.68	Brewing chamber V2	1
71.20.03	Threaded joint 4-1/8''	1
71.40.09	Drive sleeve ø20x16	1
71.40.18	Guide sleeve P10	4
71.40.19	Scraper ring ø12x19x3	4
71.40.23	Seal for cartridge	1
71.41.71	Permaglide bush P11	1
71.50.36	Security pin ø3x24	2
72.00.53	**Moving piston long, assembly**	**1**
71.00.85	Shaft with hole for piston long	1
71.20.06	O-ring ø10.69x3.53	1
71.20.63	O-ring ø2.9x1.78	1
71.40.17	Filter, assembly	1
71.51.07	Set screw M4x12 piston filter	1
72.00.82	**Piston with scraper**	**1**
71.00.61	Piston long PVDF	1
71.20.01		1

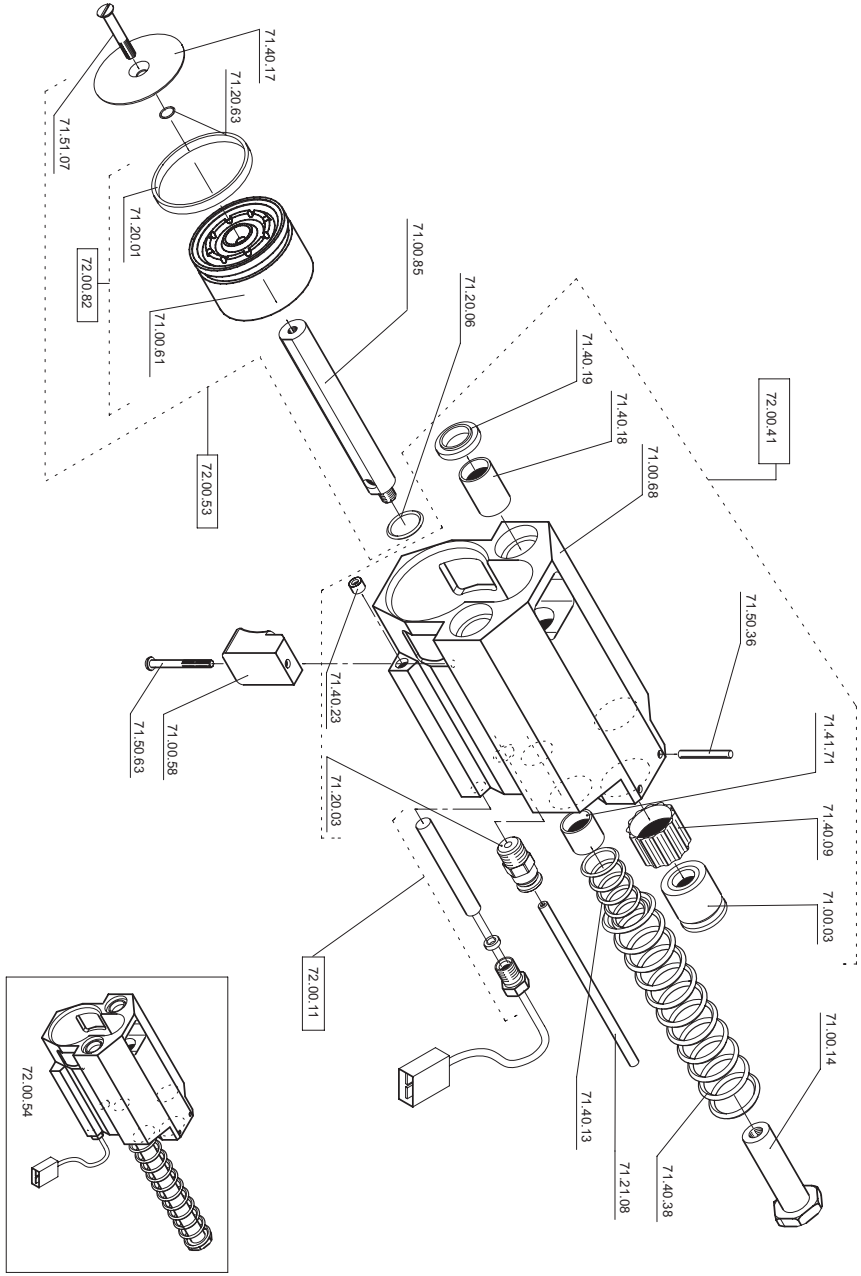

Part No	Description	Quantity
72.01.08	**Brew chamber with piston V2, assembly**	**1**
71.00.14	Spring stop nut	1
71.00.58	Cap for coffee chamber	1
71.21.08	Pipe ø4/2x298	1
71.40.13	Spring ø12.5x120	1
71.40.38	Spring ø13.5x120	1
71.50.63	Oval head screw M3x30	1
72.00.11	**Heating element 23W assembly for coffeec.**	**1**
72.00.41	**Brew chamber V2, assembly**	**1**
71.03.48	Trapezoidal nut short	1
71.00.68	Brewing chamber V2	1
71.20.03	Threaded joint 4-1/8''	1
71.40.09	Drive sleeve ø20x16	1
71.40.18	Guide sleeve P10	4
71.40.19	Scraper ring ø12x19x3	4
71.40.23	Seal for cartridge	1
71.41.71	Permaglide bush P11	1
71.50.36	Security pin ø3x24	2
72.01.09	**Moving piston long V2, assembly**	**1**
71.00.85	Shaft with hole for piston long	1
71.01.42	Mobile biston V2	1
71.20.06	O-ring ø10.69x3.53	1
71.20.63	O-ring ø2.9x1.78	1
71.40.17	Filter, assembly	1
71.51.07		1

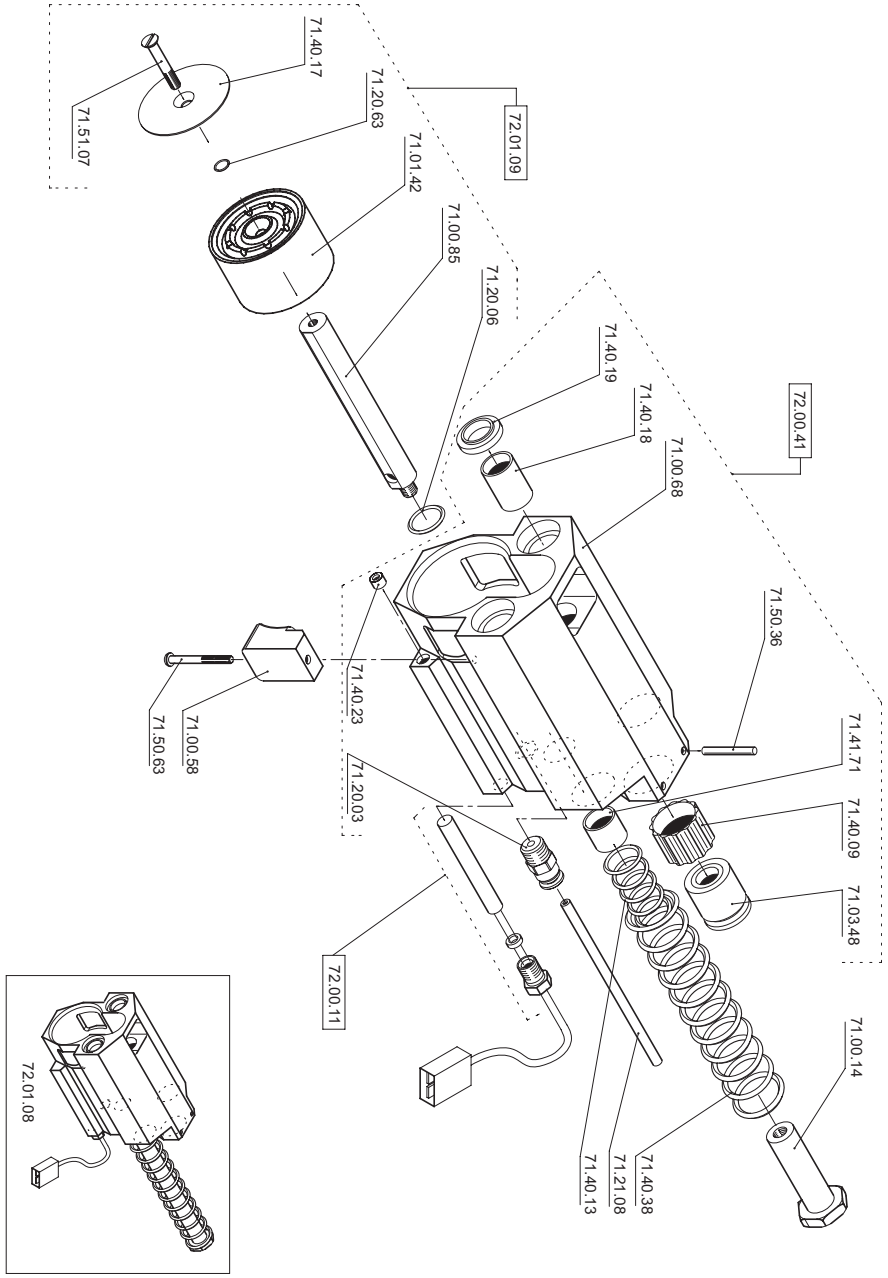

11. Bean storage container

			Page	Revision	
				List	Drawing
Bean storage container	1	with channel	11.1.1 / 11.1.2	REV.4	REV.4
Bean storage container	2		11.2.1 / 11.2.2	REV.4	REV.4

Part No	Description	Quantity
72.00.01	**Bean storage container 1 w.p. channel, assembly**	**1**
71.10.03	Bean storage container cover 1	1
71.10.06	Powder channel cover	1
72.00.02	**Bean storage container 1 w.p. channel, assembly**	**1**
72.00.08	**Container base, assembly**	**1**
71.00.18	Squared arbor 6x138.5	1
71.00.29	Handle	1
71.00.30	Stop ø 7x7	2
71.00.38	Container base plate	1
71.10.02	Front hook	1
71.10.08	Closure plate	1
71.10.09	Rear hook	1
71.40.22	Spring ø 4x18	2
71.40.42	Spacer	2
71.50.02	Oval headscrew M3x8 (self tapping)	5
71.50.41		4

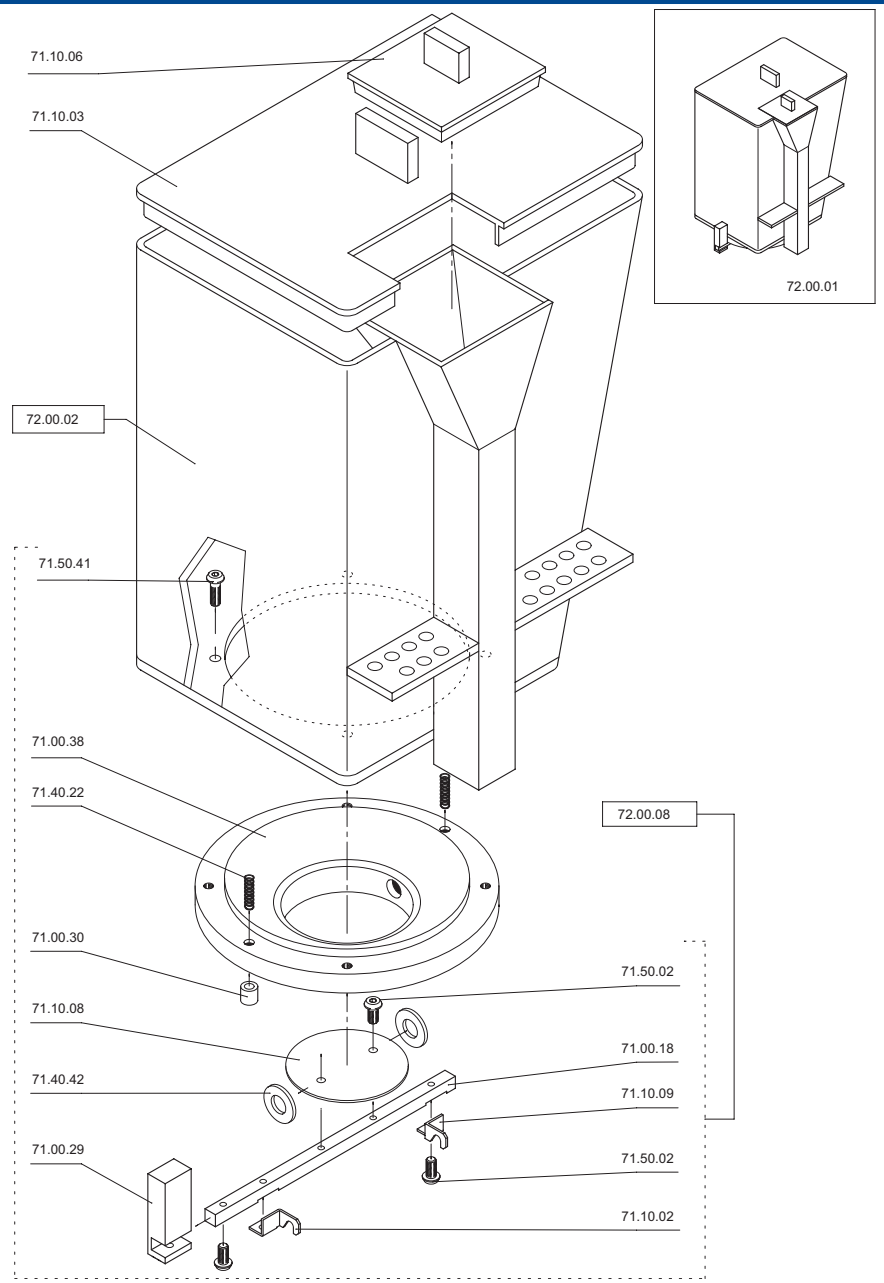

Part No	Description	Quantity
72.00.03	**Bean storage container 2, assembly**	**1**
71.10.12	Bean storage container cover 2	1
71.10.13	Bean storage container 2	1
72.00.08	**Container base, assembly**	**1**
71.00.18	Squared arbor 6x138.5	1
71.00.29	Handle	1
71.00.30	Stop ø7x7	2
71.00.38	Container base plate	1
71.10.02	Front hook	1
71.10.08	Closure plate	1
71.10.09	Rear hook	1
71.40.22	Spring ø4x18	2
71.40.42	Spacer	2
71.50.02	Oval head screw M3x8 (self tapping)	5
71.50.41		4

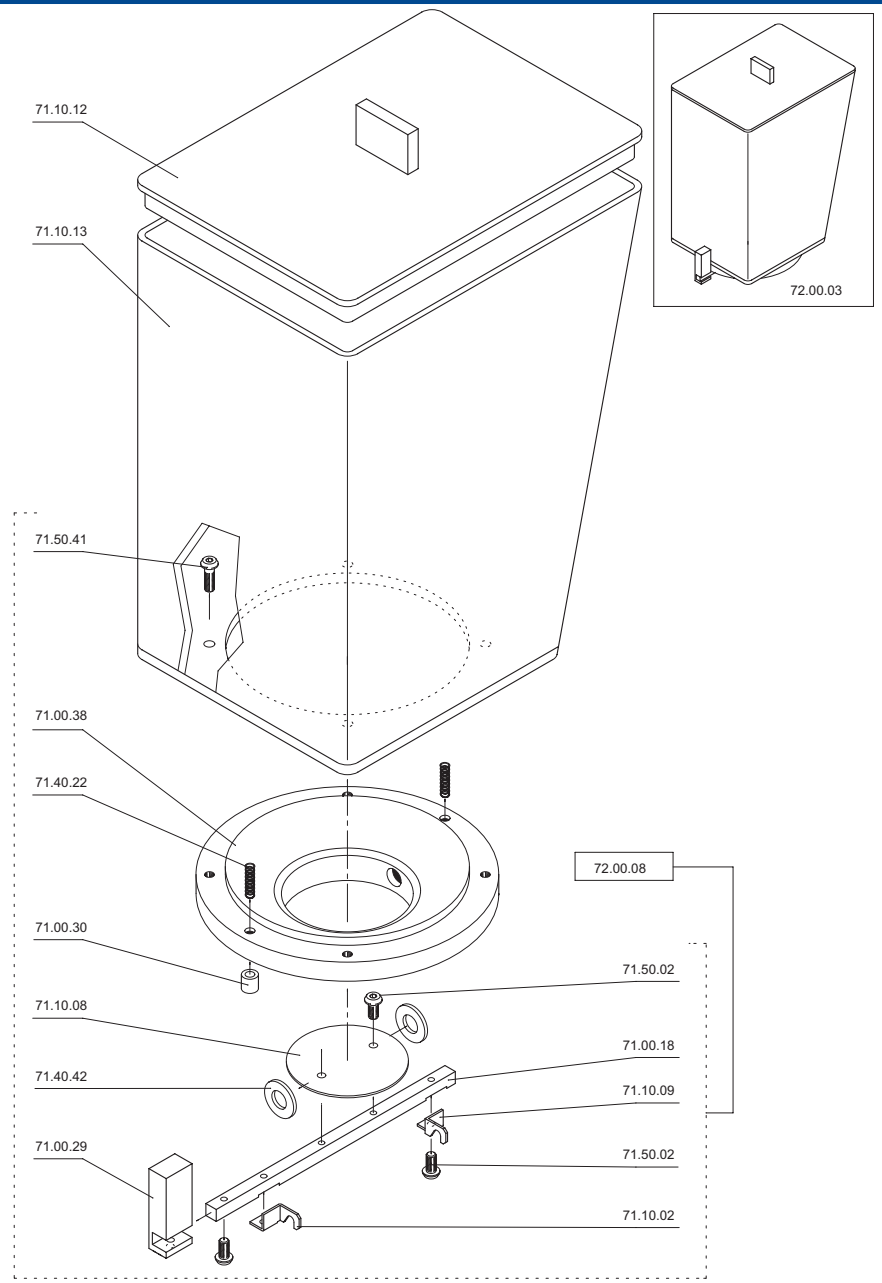

12. Hydraulic module

			Page	Revision	
				List	Drawing
Hydraulic module			12.1.1 / 12.1.2	REV.4	REV.4
Hydraulic module	CT / CTM	easyline	12.2.1 / 12.2.2	REV.4	REV.4
Hydraulic module	CTS / CTMS	easyline	12.3.1 / 12.3.2	REV.4	REV.4
Hydraulic module	CTS / CTMS	easyline	12.3.3 / 12.3.4	REV.4	REV.4
Steam boiler		easyline	12.3.5 / 12.3.6	REV.4	REV.4

Part No	Description	Quantity
72.20.00	**Hydraulic module, assembly**	**1**
71.00.19	Threaded rod M8x180	1
71.10.01	Base plate	1
71.21.00	Pipe ø6/4x150	1
71.21.56	T-connection	1
71.21.62	Tube ø7/10x350	1
71.21.67	Tube ø7/10x210	1
71.21.68	Tube ø7/10x220	1
71.32.47	Wiring harness CE hydraulic module	1
71.40.24	Pipe clamp	2
71.40.25	Handle	1
71.40.59	Button M8	1
71.50.07	Nut M8 (ø0.5)	1
71.50.10	Cheese head screw M6x16	2
71.50.31	Circlips ø6	3
71.50.43	Hexagon head cap screw M5x10	1
71.50.95	Oval head screw M4x12	2
72.20.10	**Boiler (Coffee-Tea), assembly**	**1**
72.20.11	**Flowmeter and pressure controle valve, assembly**	**1**
72.20.12	**Solenoid valve block, assembly**	**1**
72.20.13	**Water inlet, assembly**	**1**
71.20.28	Water inlet	1
71.20.38	O-ring ø6.75x1.78	2
71.23.03	Threaded elbow joint 6-1/8''	1
71.50.13	Oval head screw M4x25	2
71.50.29	Spring washer M4	2
72.20.35	**Water pump with motor, assembly**	**1**
72.20.08	**Motor for water pump, assembly**	**1**
71.30.04	Motor for water pump	1
71.31.81	Condenser for water pump	1
71.40.15	Rubber mounting bush M5	4
71.50.16	Oval head screw M5x20	4
71.50.25	Spring washer M5	4
72.20.37	**Water pump, assembly**	**1**
71.20.18	Reduction 3/8-1/8''	2
71.21.57	Waterpump	1
71.23.03	Threaded elbow joint 6-1/8''	2
71.23.40	Seal 3/8'' bi-material	2
72.20.58	**Valve block V2, assembly**	**1**
72.21.48	**Flowmeter and pressure controle valve V3, assembly**	**1**
72.21.55		**1**

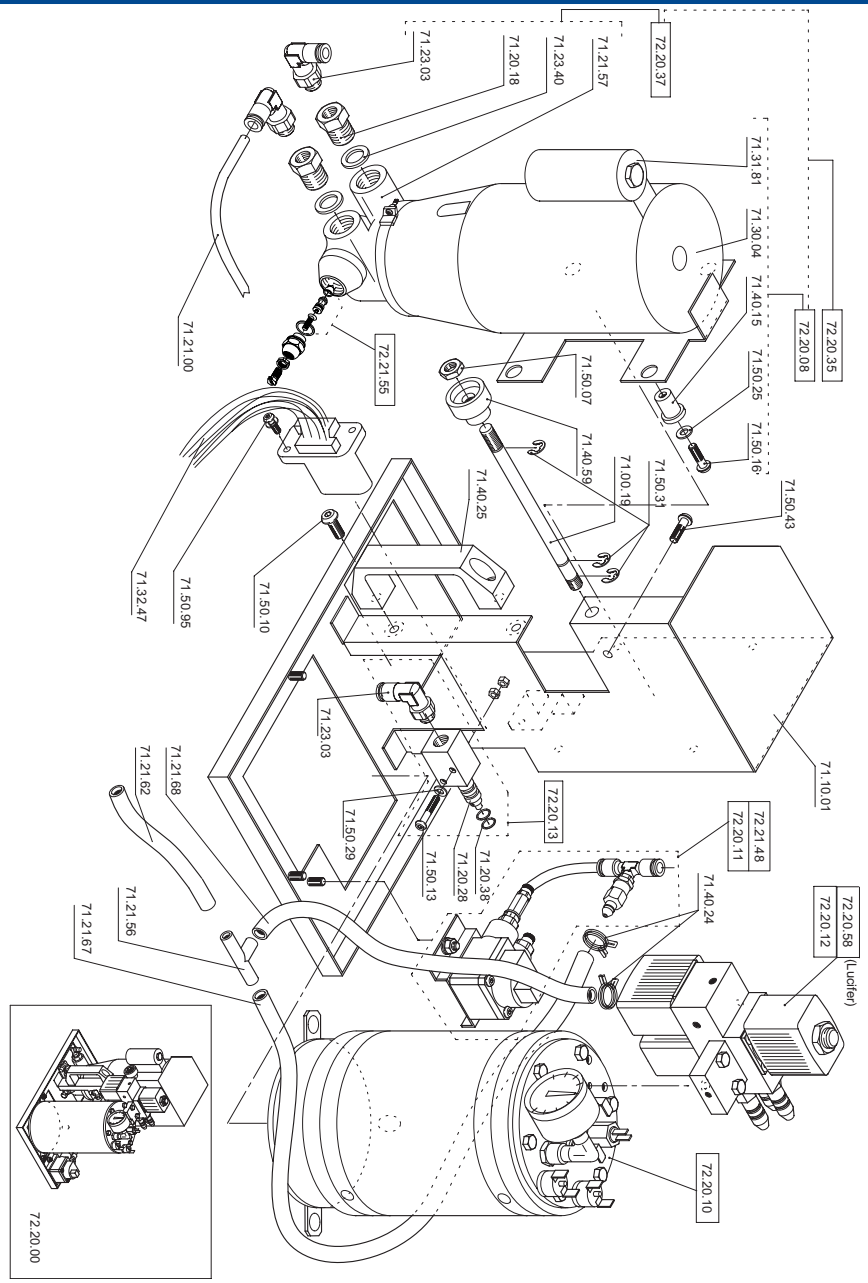

Part No	Description	Quantity
72.20.25	**Hydraulic module CT/M easy**	**1**
04.05.00	Nut M5	2
71.00.19	Threadet rod	1
71.10.01	Base plate hydraulic CT	1
71.23.65	Pipe ø4/6x150	1
71.23.67	Pipe ø4/6x280	1
71.20.10	Tube ø7/10x400	1
71.21.56	T-connection	1
71.21.61	Tube ø7/10x250	1
71.21.62	Tube ø7/10x300	1
71.23.66	Pipe ø4/6x110	1
71.23.68	Pipe ø4/6x150	1
71.23.69	Tube ø10/7x240	1
71.50.09	Cheese head screw M4x12	1
71.31.55	Relay 25A	4
71.31.95	Cover to relay 25A	1
71.31.99	Wiring harness hydraulic module	1
71.40.25	Handle	1
71.40.59	Button M8	1
71.50.07	Nut M8 (ø0.5)	1
71.50.10	Cheese head screw M6x16	2
71.50.15	Oval head screw M4x8	2
71.50.31	Circlips ø6	3
72.20.13	**Water intel, assembly**	**1**
71.20.28	Water intel	1
71.20.38	O-ring ø6.75x1.78	2
71.23.03	Threaded elbow joint 6-1/8"	1
71.50.13	Oval head screw M4x16	2
72.20.20	**Flowmeter easy, assembly**	**1**
72.20.28	**Waterpump easy, assembly**	**1**
71.28.06	Elbow pieces 6/6mm	1
71.23.28	Waterpump easy 24V	1
71.40.93	Rubber mounting bush B&W	4
71.41.90	Pump support plane easy	1
71.41.91	V-ring for pomp support	2
71.50.12	Oval head screw	4
72.20.48	**Boiler CT easy, assembly**	**1**
72.20.52	**Pressure spring easy**	**1**
71.20.58	O-ring ø14x1.78	2
71.23.46	Tube to pressure spring easy	1
71.23.47	Seal tu pressure spring easy ø18x8.5	2
71.23.48	Clamp ring to pressure spring easy ø28x17	2
71.23.49	Fixing nut to pressure spring easy ø17x17	2
71.23.51	Membrane to pressure spring easy	1
72.20.53	**Non return valve easy**	**1**
71.22.15	Washer for spring	1
71.22.16	Seal 1/8"	1
71.22.17	Valve seal	1
71.23.52	Threadet non return valve easy	1
71.23.53	Nozze non return valve easy	1
71.41.62		1

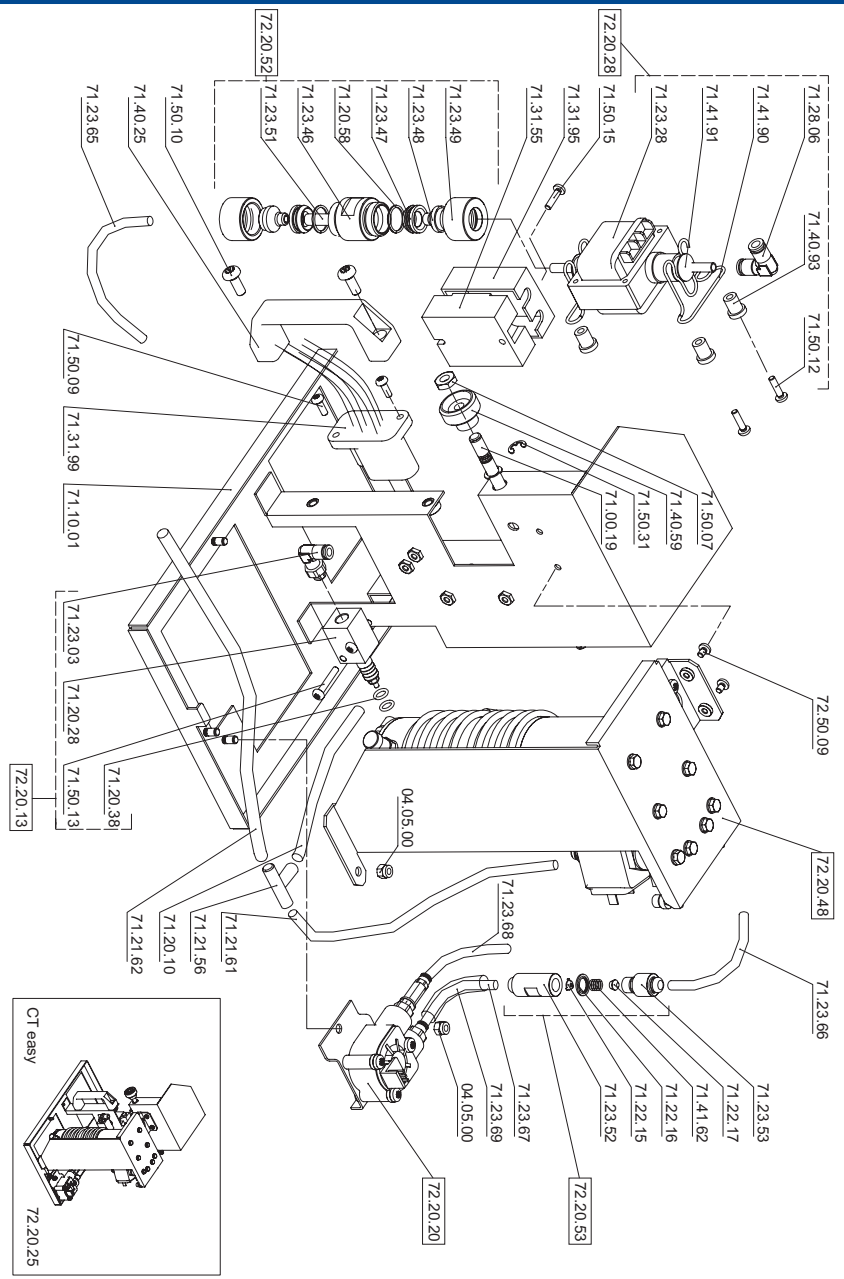

Part No	Description	Quantity
72.20.26	**Hydraulic module CTS/MS easy, assembly**	**1**
71.00.19	Threaded rod	1
71.12.32	Base plate hydraulic easy	1
71.20.23	Threaded elbow joint 4-1/8"	1
71.20.36	Hot water connector for mecanical module	1
71.20.38	O-ring ø6.75x1.78	4
71.20.82	Manometer, 0-4 bar	1
71.21.15	T-connector 6-6	1
71.22.03	Straight connector 6/4-1/8"	2
71.23.23	Niveau-block above, easy	1
71.23.24	Niveau-block below, easy	1
71.23.36	Drain connection easy	1
71.24.17	Straight connector 1/4" ø10mm	2
71.23.84	Pipe ø8/10x155	1
71.23.06	Pipe ø6/4x125	1
71.23.85	Pipe ø6/4x80	2
71.23.86	Pipe ø6/4x110	1
71.23.88	Pipe ø6/4x70	1
71.23.89	Pipe ø6/4x190	1
71.23.90	Pipe ø6/4x260	1
71.23.92	Pipe ø6/4x330	1
71.23.94	Pipe ø6/4x550	1
71.23.96	Pipe ø6/4x100	1
71.23.97	Pipe ø4/2x270	1
71.23.67	Pipe ø6/4x250	1
71.30.09	Surpression control device Ma-ter XP100 1/4"	1
71.30.58	Temperature control device Ranco	1
71.32.38	Niveau-motion capacitive easy	2
71.40.25	Handle	1
71.40.59	Button M8	1
71.50.07	Nut M8 (0.5d)	1
71.50.10	Cheese head screw M6x16	2
71.50.14	Oval head screw M4x35	2
71.50.31	Circlips ø6	3
71.50.41	Tallow-drop screw ø4x10	3
71.50.51	Tallow-drop screw KA30x8	2
71.50.91	Hexagon head screw M5x8	4
72.20.23	**Mix-valve easy, assembly**	**1**
07.35.12	Recessed head screw ø3.5x12	4
71.23.77	Minivalve coil luzifer	2
71.23.78	Minivalve plunger luzifer	2
71.23.79	O-ring ø3.69x1.78	2
71.23.80	O-ring ø12x1.5	2
71.23.81	Minivalve pipe luzifer	2
71.23.82	Guide adjustment screw luzifer	1
71.23.83	Adjustment screw luzifer	1
72.20.53	**Non return valve easy**	**2**
71.22.15	Washer for seal	1
71.22.16	Seal 1/8"	1
71.22.17	Valve seal	2
71.23.50	Quickly change use	1
71.23.52	Treadet non return valve easy	1
71.23.53	Nozze nin return valve easy	1
71.41.62	Spring ø5.5x8.3x0.3	1
72.20.20	**Flowmeter easy, assembly**	**1**
72.20.27	**Boiler easy coffee 2,5kW, assembly**	**1**
72.70.20		**1**

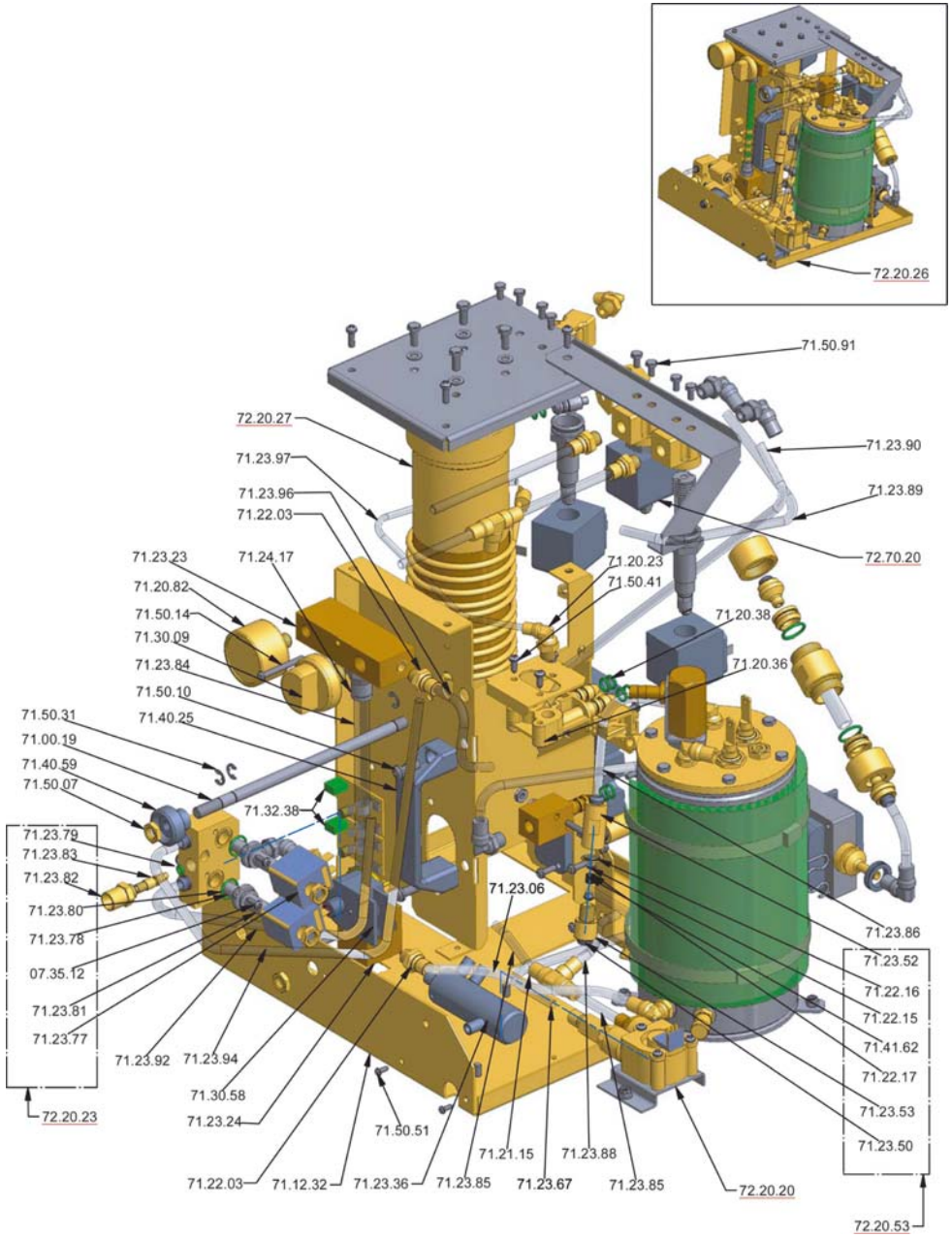

Part No	Description	Quantity
72.20.26	**Hydraulic module CTS/MS easy,assembly**	**1**
71.12.48	Support plate valve hydraulic	1
71.12.49	Support plate hydraulic easy	1
71.12.51	Support coffee boiler easy	1
71.20.23	Threaded elbow joint 4-1/8“	1
71.20.38	O-ring ø6.75x1.78	4
71.21.15	T-connector 6-6	1
71.21.69	Seal ø13/10x1 for heating element	2
71.22.76	Closing cap boiler easy	1
71.22.77	Connecting valve boiler easy	1
71.24.16	Threaded elbow joint 1/8“ ø6	3
71.22.03	Straight connector 6/4-1/8	2
71.23.15	Elbow piece 6/6mm	2
71.23.87	Pipe ø6/4x60	1
71.23.88	Pipe ø6/4x70	1
71.23.89	Pipe ø6/4x190	1
71.23.91	Pipe ø6/4x210	1
71.23.93	Pipe ø6/4x110	1
71.23.98	Pipe ø6/4x280	1
71.23.99	Pipe ø6/4x530	1
71.31.55	Relay 25A	2
71.31.97	Wiring harness US-SC-I easy CTS	1
71.32.03	Wiring harness UH- CTS-SCP-I1 easy CTS	1
71.50.04	Cheese screw M4x8	4
71.50.09	Cheese screw M4x12	2
71.50.21	Hexagon head screw M5x12	4
71.50.28	Washer M5	4
71.50.91	Hexagon head screw M5x8	4
71.50.95	Tallow-drop screw with springring M4x12	3
72.20.13	**Water inlet, assembly**	**1**
71.20.28	Water inlet	1
71.20.38	Oring ø6.75x1.78	2
71.23.03	Threadeh elbow joint 1/8“ ø6	1
71.50.13	Oval head screw M4x25	2
72.20.28	**Water pump easy, assembly**	**1**
71.23.15	Elbow piece 6/6mm	1
71.23.28	Waterpump easy 24V	1
71.40.93	Rubber mounting bush B&W	4
71.41.90	Pump support plate easy	1
71.41.91	V-ring for pump support easy VA14	2
71.50.12	Oval head screw M4x16	4
72.20.41	**Coffee valve easy**	**1**
71.22.91	Coil for lucifer valve	1
71.22.92	Plugger guide for lucifer valve	1
71.22.93	Nut for lucifer valve	2
71.23.18	Plugger for lucifer valve	1
71.23.19	Socle for lucifer valve	1
72.20.52	**Absorbing pressure easy, assenbly**	**1**
71.20.58	O-ring ø14x1.78	2
71.23.46	Tube to pressure spring easy ø28x36	1
71.23.47	Seal to pressure spring easy ø18x8.5	2
71.23.48	Clamp ring to pressure spring easy ø28x17	2
71.23.49	Fixing not to pressure spring easy ø17x17	2
71.23.50	Quickly change use	2
71.23.51	Membrane to pressure spring easy	1
72.70.20	**Steam valve easy 3/2ø2.5 1/8“, assembly**	**2**
71.22.91	Coil to lucifer valve	1
71.22.92	Plugger guide to lucifer valve	1
71.22.93	Nut to lucifer valve	1
71.23.18	Plugger to lucifer valve	1
71.23.20	Socle for tea valve easy	1
72.20.29	**Steam boiler easy, assembly**	**1**
72.20.53		**2**

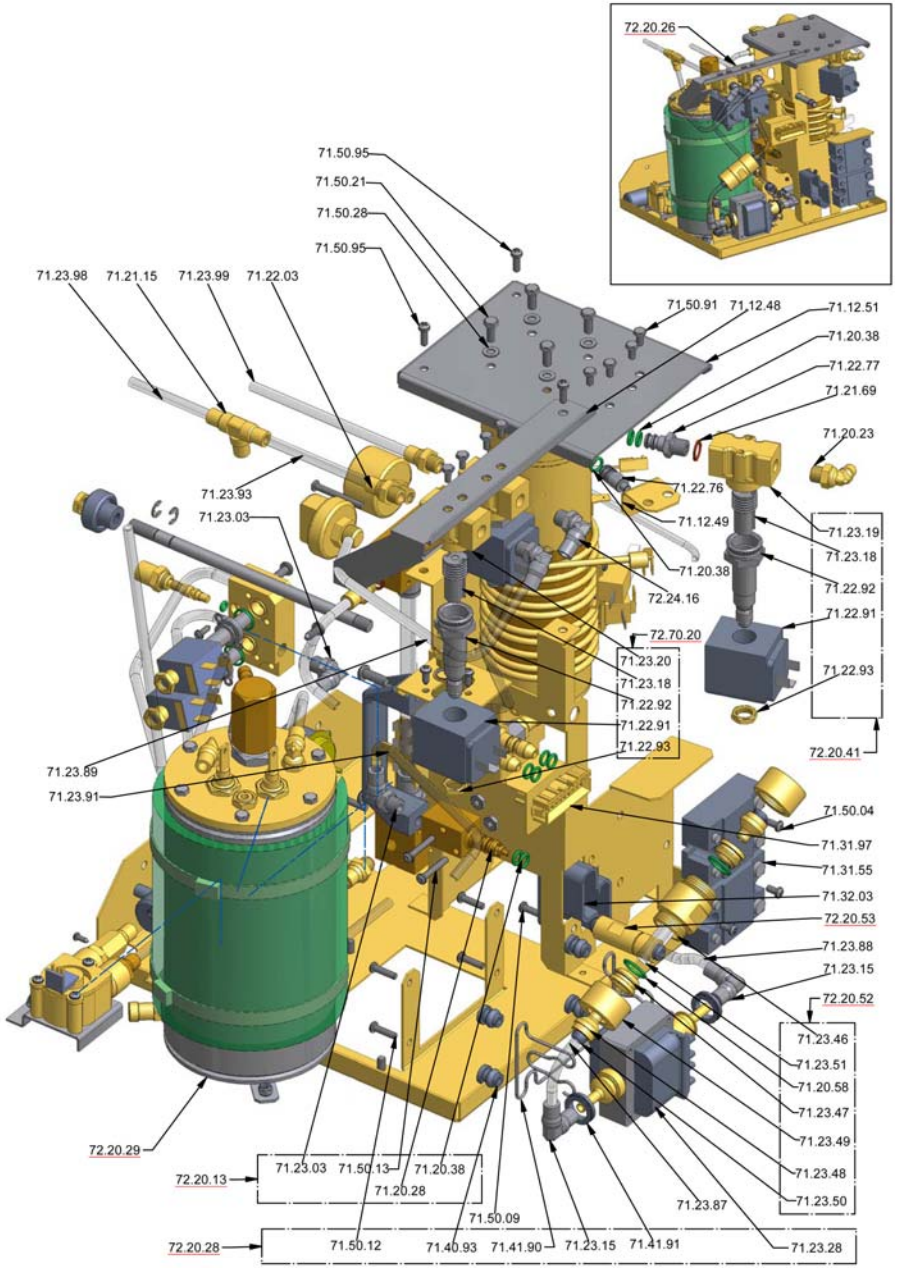

Part No	Description	Quantity
72.20.29	**Steam boiler easy, assembly**	**1**
71.24.16	Threaded elbow joint 1/8" ø6	2
71.22.08	O-ring ø8x1.5	1
71.22.83	Cover for boiler easy 3.5KW	1
71.23.43	Flat seal ø14x33x1.6 CTS easy	2
71.30.66	Nut for boiler heating	1
71.31.58	Heater steam boiler easy	1
71.50.21	Hexagon head cap screw M5x12	6
71.51.02	Nut for boiler heating TS easy	2
72.20.59	**Steam boiler iso. easy, assembly**	**1**
04.05.00	Nut M5	2
71.20.17	O-ring ø78x2.5	1
71.24.16	Threaded elbow joint 1/8" ø6	3
71.20.63	O-ring ø2.9x1.78	1
71.21.13	Drain plag	1
71.21.14	Drain plug adapter	1
71.22.82	Steam boiler easy	1
71.40.35	Boiler insulation mat.	1
71.40.76	Insulation fixing band	2
71.50.25	Spring washer M5	2
72.70.12	**Security-valve TS, assembly**	**1**
71.12.18	Security-plate for security-valve TS	1
71.22.23	Security-valve body	1
71.22.24	Security-valve base	1
71.22.28	Nipple ø9x1/8 Security-valve	1
72.70.27	**Spare parts kit security valve TS, assembly**	**1**
71.22.21	Anti-vaccum valve	1
71.22.22	Security-valve shutter	1
71.22.25	O-ring ø17.17x1.78	1
71.22.26	O-ring ø4.48x1.78	1
71.22.38	O-ring ø7.59x 2.62	1
71.40.48	Security-valve spring ø7.5x1.5-23	1
71.50.89	Pin ø2x10	1
71.23.06	Pipe ø6/4x125	1
71.23.86	Pipe ø6/4x110	1
71.23.89	Pipe ø6/4x190	1
71.23.90	Pipe ø6/4x260	1
71.23.96		1

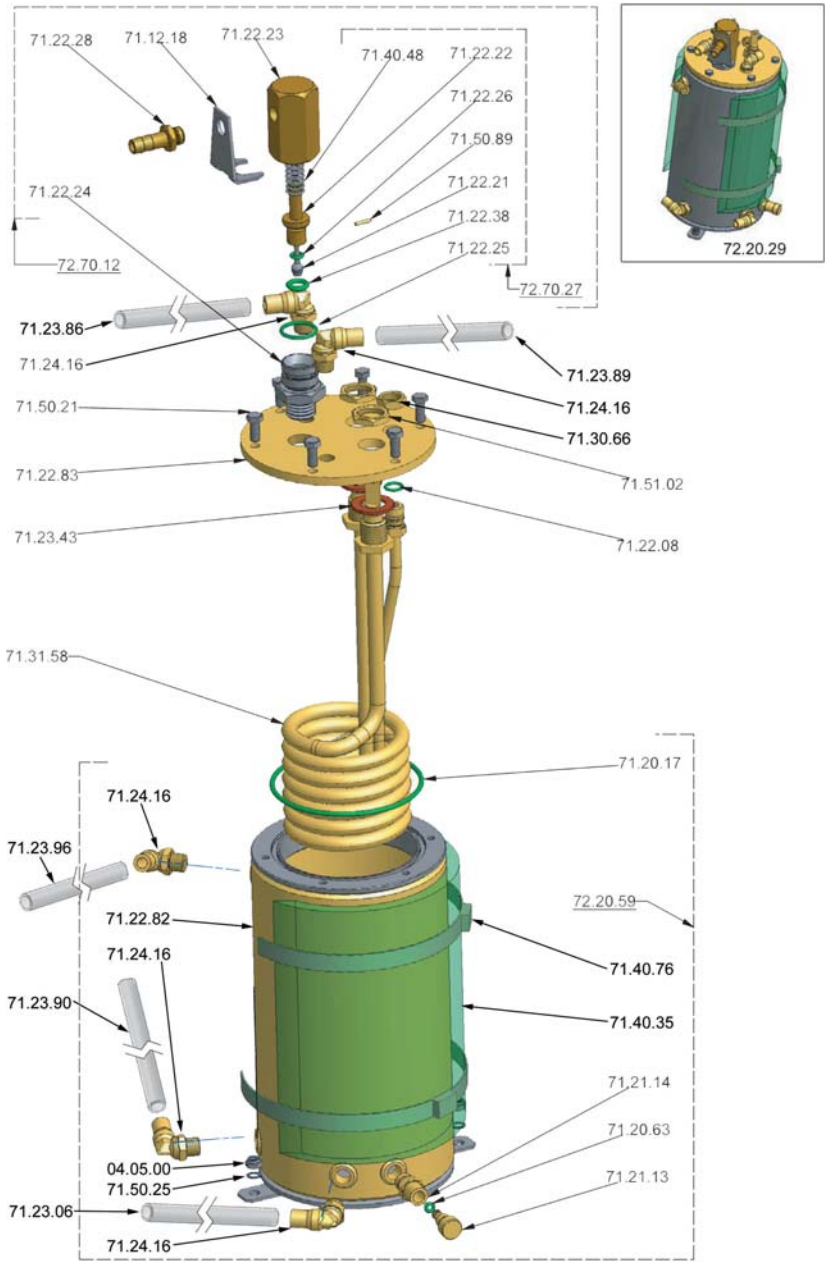

13. Coffee boiler

	Page	Revision	
		List	Drawing
Coffee boiler	13.1.1 / 13.1.2	REV.4	REV.4
Coffee boiler easyline	13.2.1 / 13.2.2	REV.4	REV.4

Part No	Description	Quantity
72.20.10	**Boiler (Coffee-Tea), assembly**	**1**
04.05.00	Nut M5	2
71.20.09	Cover for boiler (Coffee-Tea)	1
71.20.15	Manometer 0 to 16 bar	1
71.20.22	Threaded union 1/8''	1
71.20.25	Threaded elbow joint 1/8''	1
71.21.04	Nut G1/8''	1
71.30.06	Safety device for boiler	2
71.30.78	Faston 45°	1
71.50.21	Hexagon head cap screw M5x12	6
71.50.28	Spring washer M5	2
71.50.27	Washer M4	2
72.20.55	**Heating element 2.5KW**	**1**
71.20.39	O-ring ø9x2	2
71.21.69	Seal ø13/10x1 for heating element	2
71.30.05	Heating element 2.5KW	1
71.30.66	Nut for boiler heating	2
72.20.60	**Boiler coffee**	**1**
71.20.17	O-ring ø78x2.5	1
71.20.20	Threaded elbow joint 6-1/8''	1
71.20.63	O-ring ø2.9x1.78	1
71.21.13	Drain plug	1
71.21.14	Drain plug adapter	1
72.20.43	**Coffee boiler insulated, assembly**	**1**
71.20.08	Boiler coffee-tea	1
71.40.35	Boiler insulation material	1
71.40.76	Insulatio fixing band	1
72.21.07	**Temperature probe, assembly**	**1**
71.20.57	O-ring ø10.82x1.78	1
71.30.07		1

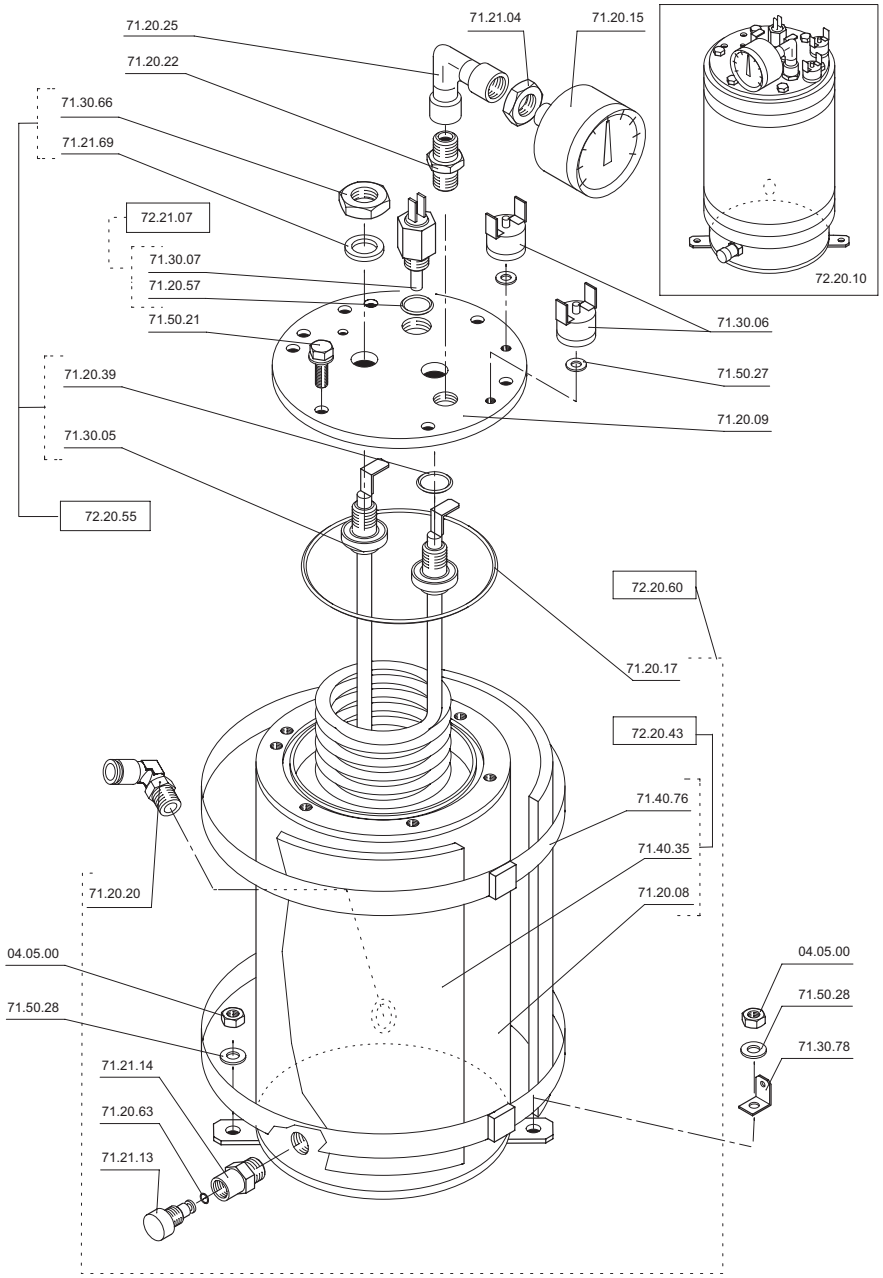

Part No	Description	Quantity
72.20.48	**Boiler CT easy, assembly**	**1**
71.12.43	Adjustment baseplate hydraulic easy CT	1
71.20.23	Threaded elbow joint 4-1/8"	3
71.20.36	Hot water conector mechanical unit	1
71.20.38	O-ring ø6.75x1.78	8
71.21.69	Seal ø13/10x1 for heating element	2
71.22.77	Connection valve boiler easy	2
71.50.21	Hexagon head screw M5x12	4
71.50.28	Washer M5	4
71.50.41	Tallow-drop screw ø4x10	3
71.50.91	Hexagon head screw M5x8	4
72.20.27	**Boiler easy coffee 2,5kW, assembly**	**1**
71.20.63	O-ring ø2.9x1.78	1
71.21.13	Drain plug	1
71.21.14	Drain plug adpter	1
71.22.13	Water intel fitting TS	1
71.22.31	Seal 3/8"	1
71.22.70	Boiler coffee easy 2.5KW	1
71.22.72	O-ring ø45.69x2.62	1
71.23.03	Threaded elbow joint 6-1/8	2
71.26.14	Extension positive pressure	1
71.32.60	NTC sensor 10K easy, assembly	1
71.31.89	Temperatur controler easy boiler coffee	2
71.32.01	Wiring harness heater-in boiler CT easy	1
71.32.02	Wiring harness heater-out boiler easy	1
71.50.90	Oval head self-tapping screw 2.9x4.5	4
72.20.98	**Pressure control valve V3, assembly**	**1**
71.23.22	Over pressure clip	1
72.20.41	**Valve 3-way, assembly**	**1**
71.22.92	Plugger guide for valve 3-way	1
72.20.42	**Valve 2-way, assembly**	**1**
71.22.91	Coil for valve 2-way	1
71.22.93	Nut for valve	1
71.23.17	Pipe for valve 2-way	1
71.23.18	Plugger for valve 2-way	1
71.23.20	Sode for valve 2-way	1
71.23.41		1

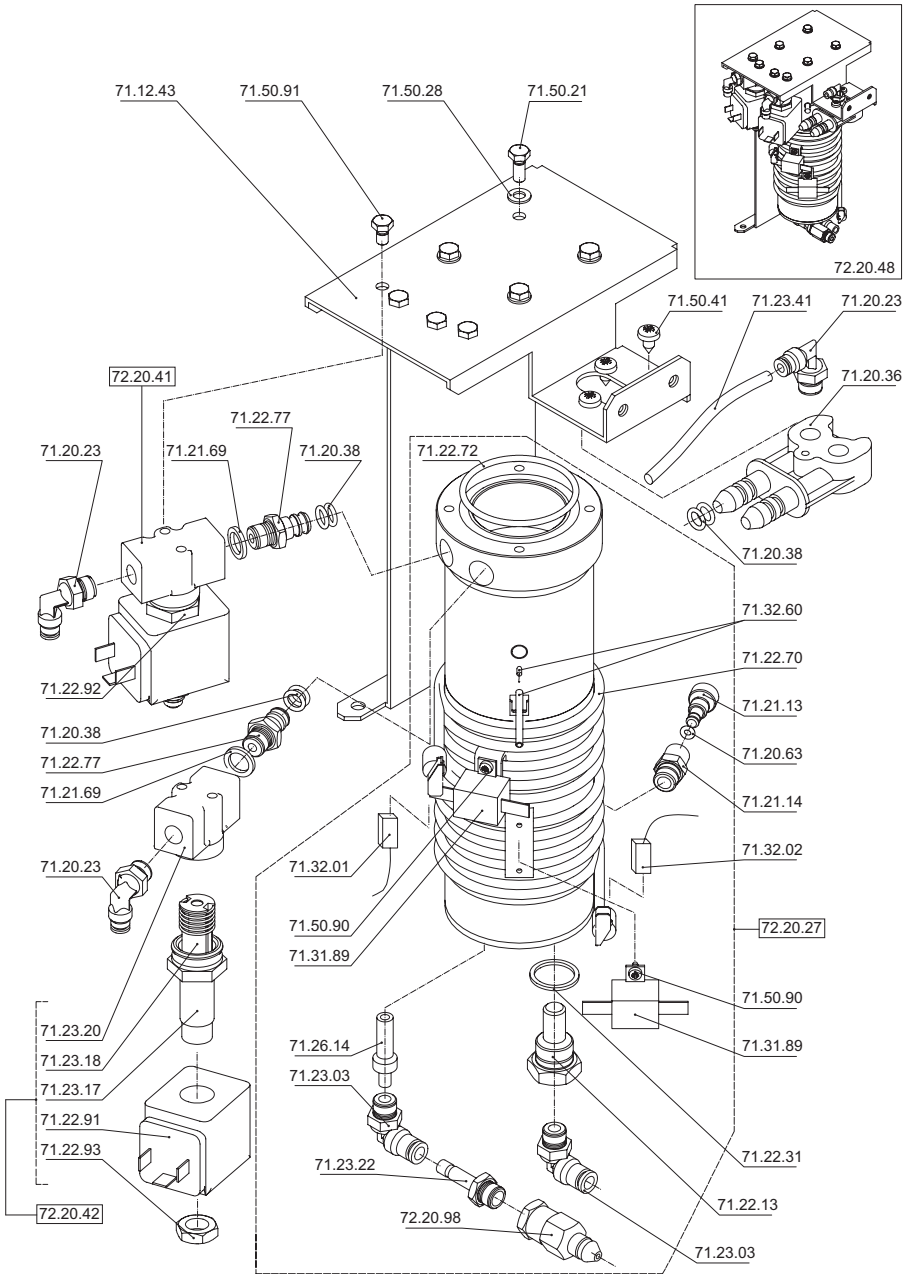

14. Solenoid valve block

			Page	Revision	
				List	Drawing
Solenoid valve block	3 valves	V1	14.1.1 / 14.1.2	REV.4	REV.4
Solenoid valve block	3 valves	V2	14.1.3 / 14.1.4	REV.4	REV.4

Part No	Description	Quantity
72.20.12	**Solenoid valve block V1, assembly**	**1**
71.20.04	O-ring ø6.07x1.78	1
71.50.22	Hexagon head cap screw M5x25	2
71.50.28	Washer M5	2
72.20.09	**Solenoid valve 2- and 3-way, assembly**	**1**
71.20.32	Block	1
72.20.02	**Solenoid valve (3-way), assembly**	**1**
71.20.62	Plugger guide 3 ways	1
71.20.79	Countersunk screw M4x10 (valve)	4
71.21.04	Nut G1/8''	1
71.21.26	O-ring for spool sluice	1
71.21.29	Valve coil	1
71.22.48	Flange for valve pipe	1
72.20.39	**Plunger with seal for 2- and 3-way valve**	**1**
71.21.27	Seal for 2- and 3-way valve	1
71.21.28	Plugger for 2- and 3-way valve	1
72.20.03	**Solenoid valve 2-way, assembly**	**2**
71.20.50	Pipe 2-way	2
71.20.79	Countersunk screw M4x10 (valve)	8
71.21.04	Nut G1/8''	2
71.21.26	O-ring for spool sluice	2
71.21.29	Valve coil	2
71.22.48	Flange for valve pipe	2
72.20.39	**Plunger with seal for 2- and 3-way valve**	**2**
71.21.27	Seal for 2- and 3-way valve	2
71.21.28	Plugger for 2- and 3-way valve	2
72.21.08	**Pipe ø 4/2 x 298**	**3**
71.20.33	Threaded joint 1/8''	1
71.20.38		2

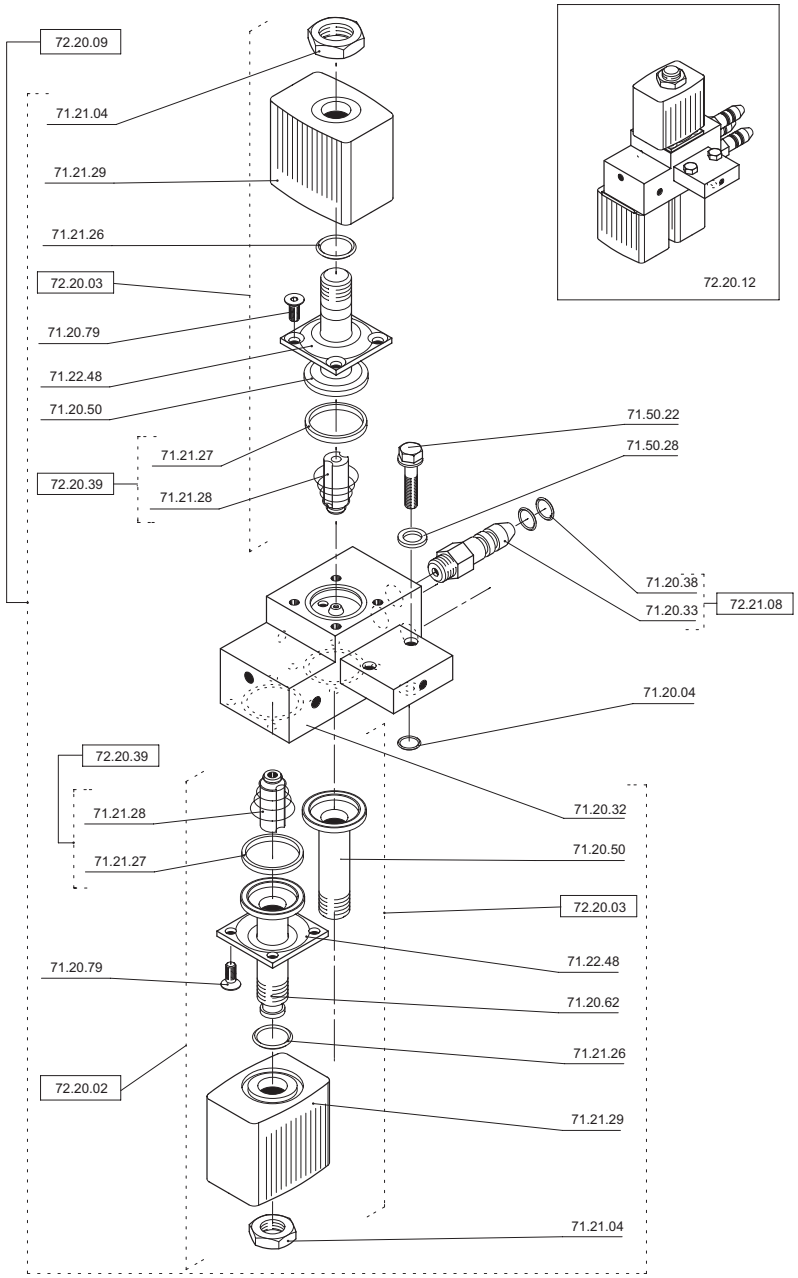

Part No	Description	Quantity
72.20.58	**Valve block Lucifer, assembly**	**1**
71.20.04	O-ring ø6.07x1.78	1
71.50.22	Hexagon head cap screw M5 x 25	2
71.50.28	Washer M5	2
72.20.57	**Solenoid valve, assembly**	**1**
71.22.91	Coil for valve	3
71.22.92	Plunger guide 3-way	1
71.22.93	Nut for valve	3
71.23.17	Plunger guide 2-way	2
71.23.18	Plunger for valve	3
71.24.04	Socle valve block	1
72.21.08	**Straight line screw connection 1/8'', assembly**	**3**
71.20.33	Threaded joint 1/8''	1
71.20.38		6

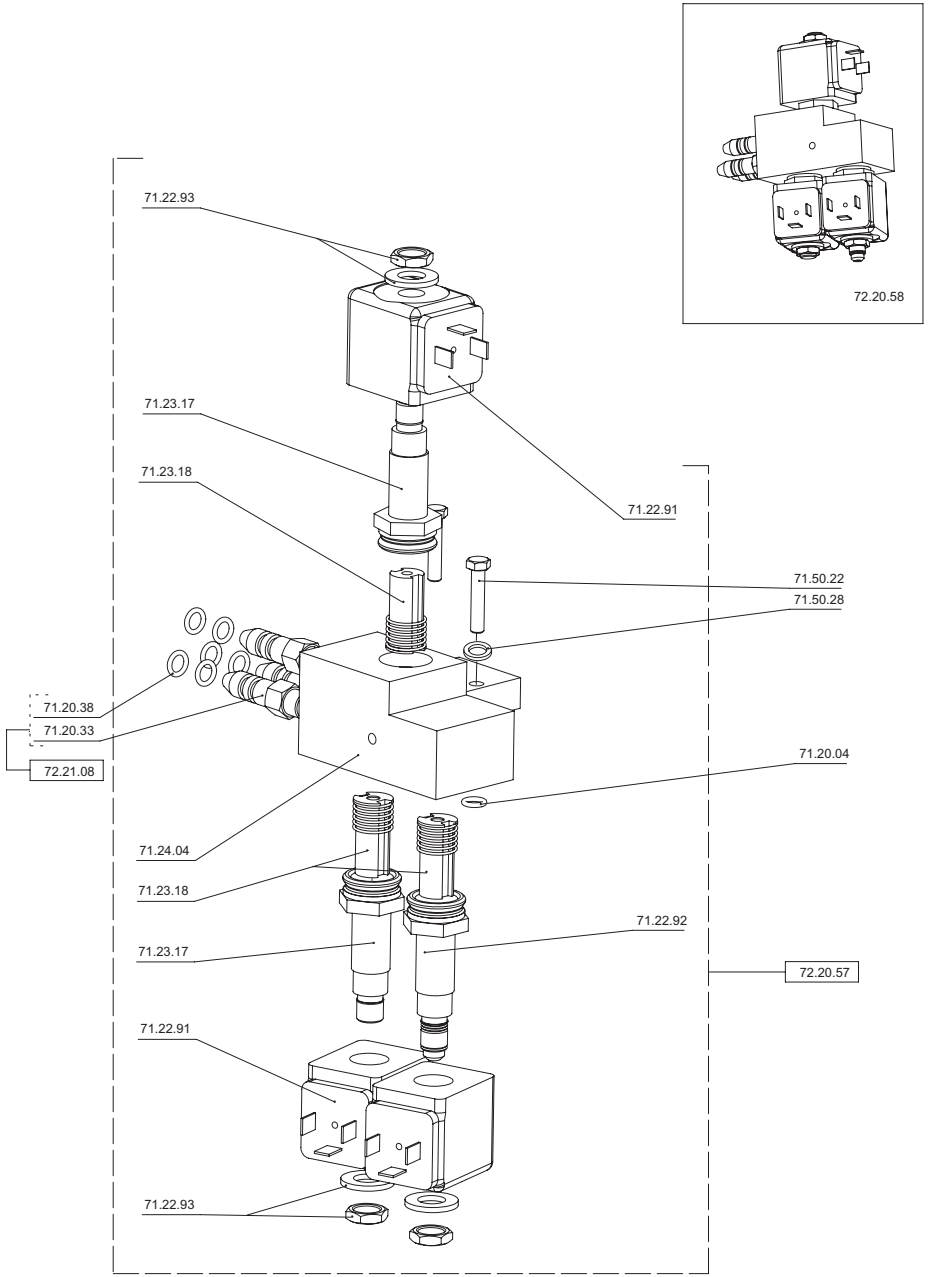

15. Flowmeter with valve

		Page	Revision	
			List	Drawing
Flowmeter with valve	V2	15.1.1 / 15.1.2	REV.4	REV.4
Flowmeter with valve	V3	15.1.3 / 15.1.4	REV.4	REV.4
Flowmeter with valve	V4	15.1.5 / 15.1.6	REV.4	REV.4
Flowmeter with valve	easyline	15.2.1 / 15.2.2	REV.4	REV.4

Part No	Description	Quantity
72.20.11	**Flowmeter and pressure control valve, assembly**	**1**
04.05.00	Nut M5	1
71.10.55	Support plate for flowmeter	1
71.22.66	Pipe ø6/4x135	1
71.23.11	Pipe ø6/4x480	1
71.23.13	Pipe ø6/4x50	1
71.50.28	Washer M5	1
71.50.41	Tallow-drop screw KA 40x10	2
72.20.04	**Flowmeter, assembly**	**1**
71.20.19	Threaded joint 6-1/4''	1
71.21.30	Filter for flowmeter	1
71.21.31	Sleeve	1
72.20.44	**Flowmeter**	**1**
71.20.12	Cover for flowmeter	1
71.21.32	O-ring for flowmeter	1
71.21.33	Wheel flowmeter	1
71.21.66	Housing for flowmeter	1
71.50.42	Tallow-drop screw KA 40x16	3
72.20.34	**Pressure control valve V2, assembly**	**1**
71.22.17	Valve seal	1
71.22.42	T-piece surpression valve V2	1
71.22.43	Valve housing check valve V2	1
71.24.18	Spring ring security valve V2	1
71.41.66	Spring for surpression valve V2	1
72.20.36	**Not return valve V2, assembly**	**1**
71.20.57	O-ring ø10.82x1.78	1
71.22.15	Washer for spring	1
71.22.16	Seal 1/8''	1
71.22.45	Straight connection 6-1/8'' surpression	1
71.22.46	Reduction surpression valve	1
72.20.30		**1**

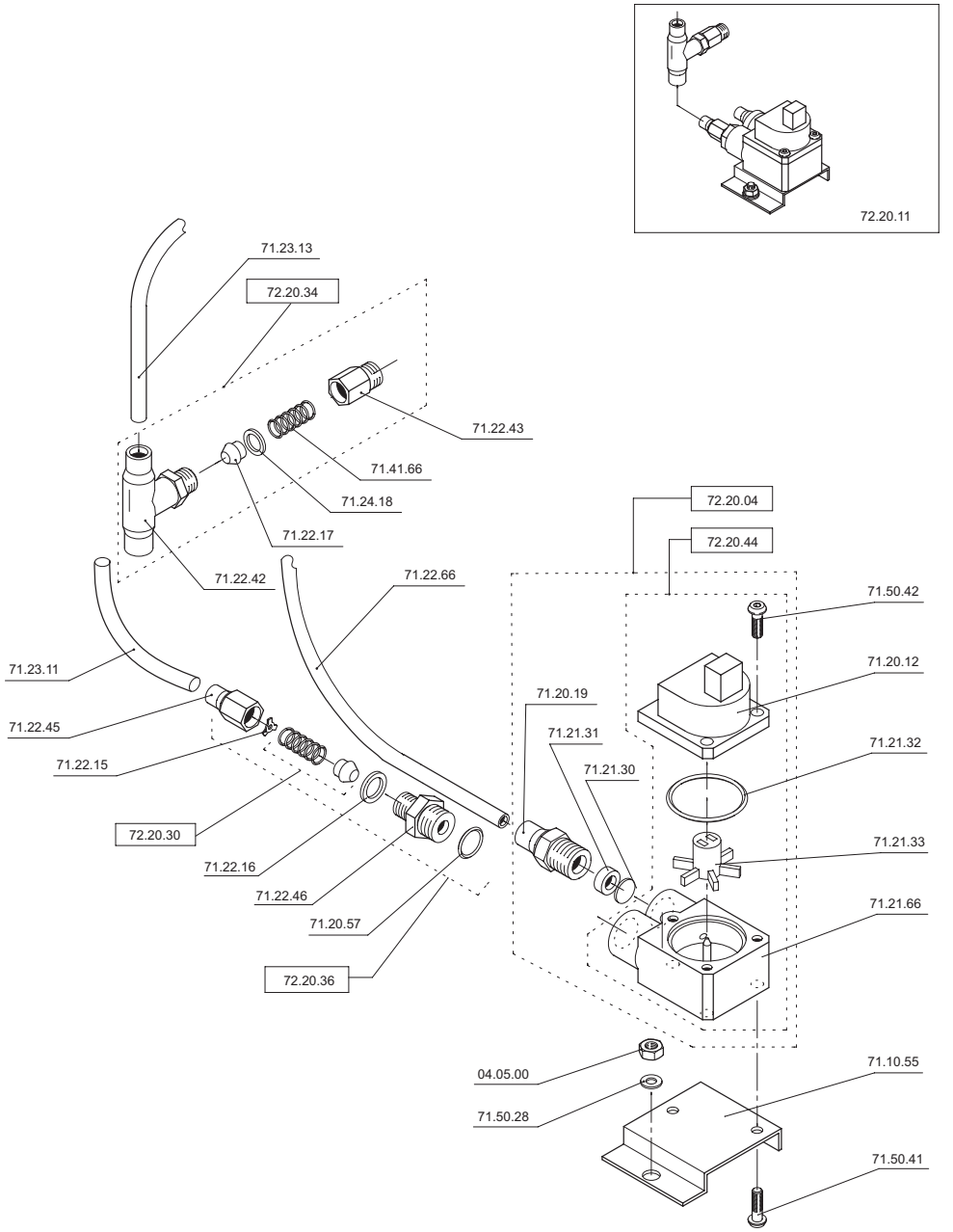

Part No	Description	Quantity
72.21.48	**Flowmeter and pressure control valve, assembly**	**1**
04.05.00	Nut M5	1
71.10.55	Support plate for flowmeter	1
71.22.42	T-pice suprèssion valve V2	1
71.22.66	Pipe ø6/4x135	1
71.23.11	Pipe ø6/4x480	1
71.23.13	Pipe ø6/4x50	1
71.50.28	Washer M5	1
71.50.41	Tallow-drop screw KA 40x10	2
72.20.04	**Flowmeter, assembly**	**1**
71.20.19	Threaded joint 6-1/4''	1
71.21.30	Filter for flowmeter	1
71.21.31	Sleeve	1
72.20.44	**Flowmeter**	**1**
71.20.12	Cover for flowmeter	1
71.21.32	O-ring for flowmeter	1
71.21.33	Wheel flowmeter	1
71.21.66	Housing for flowmeter	1
71.50.42	Tallow-drop screw KA 40x16	3
72.20.36	**Not return valve V2, assembly**	**1**
71.20.57	O-ring ø10.82x1.78	1
71.22.15	Washer for spring	1
71.22.16	Seal 1/8''	1
71.22.45	Straight connection 6-1/8'' surpression	1
71.22.46	Reduction surpression valve	1
72.20.30	**Spring with valve seal**	**1**
71.22.17	sello 1/8"	1
71.41.62	Spring ø5.1x11.3	1
72.20.98		**1**

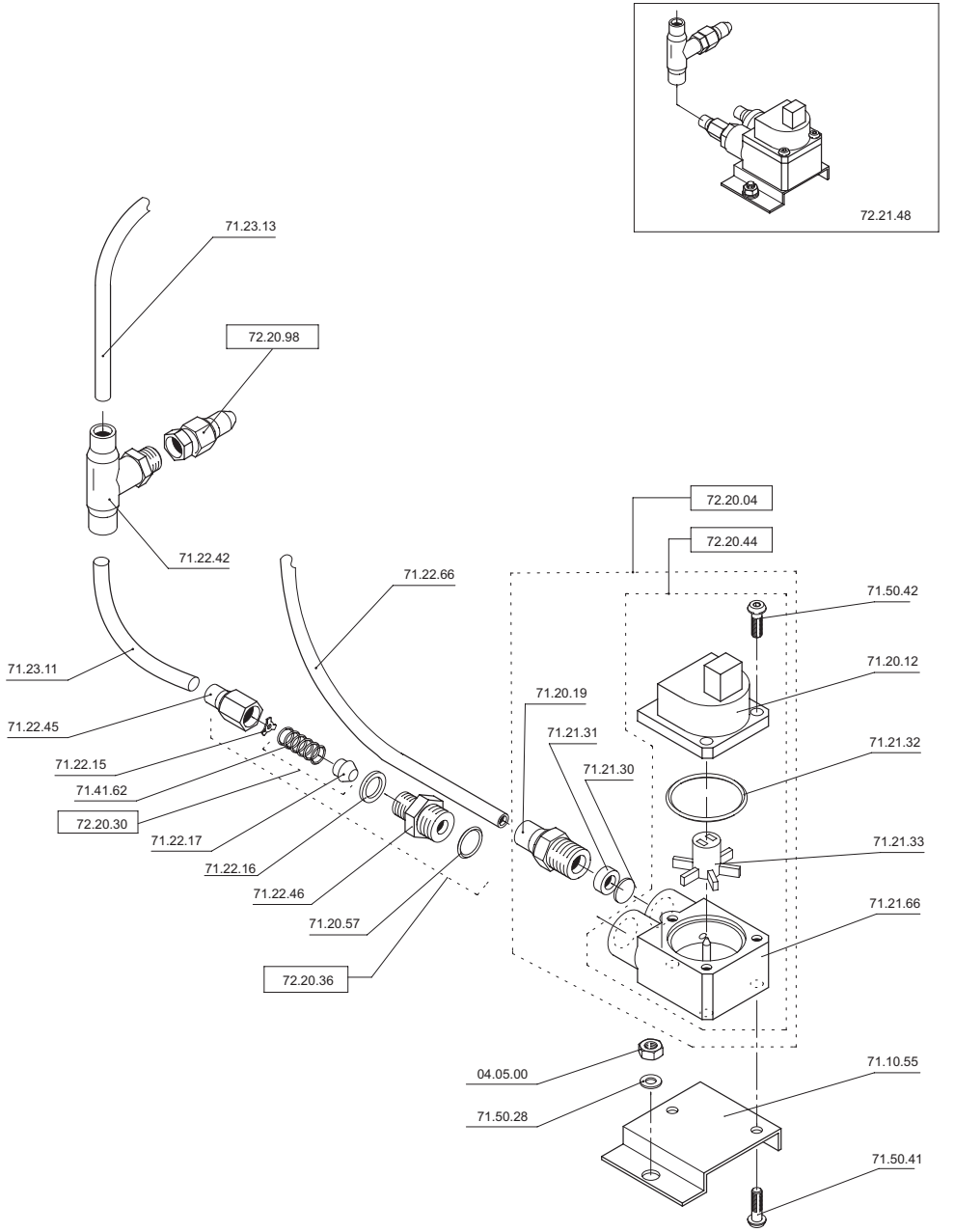

Part No	Description	Quantity
72.21.48	**Flowmeter and pressure control valve V3, assembly**	**1**
04.05.00	Nut M5	1
71.10.55	Support plate for flowmeter	1
71.22.66	Pipe ø6/4x135	1
71.23.11	Pipe ø6/4x480	1
71.23.13	Pipe ø6/4x50	1
71.28.16	T-fitting 6-6-1/8"	1
71.50.28	Washer M5	1
71.50.41	Tallow-drop screw KA 40x10	2
72.20.04	**Flowmeter, assembly**	**1**
71.21.30	Filter for flowmeter	1
71.21.31	Sleeve	1
71.28.00	Threaded joint 6-1/4''	1
72.20.44	**Flowmeter**	**1**
71.20.12	Cover for flowmeter	1
71.21.32	O-ring for flowmeter	1
71.21.33	Wheel flowmeter	1
71.21.66	Housing for flowmeter	1
71.50.42	Tallow-drop screw KA 40x16	3
72.21.70	**Check valve V3 to flowmeter, assembly**	**1**
71.20.21	Bushing 1/4"-1/8"	1
71.22.16	Seal 1/8''	2
71.23.08	Straight connector TS 6-1/8"	1
71.24.25	Seal 1/4"	1
71.26.38	Threaded bushing 1/8"	1
72.20.84	**Valve check air valve block**	**1**
72.20.98		**1**

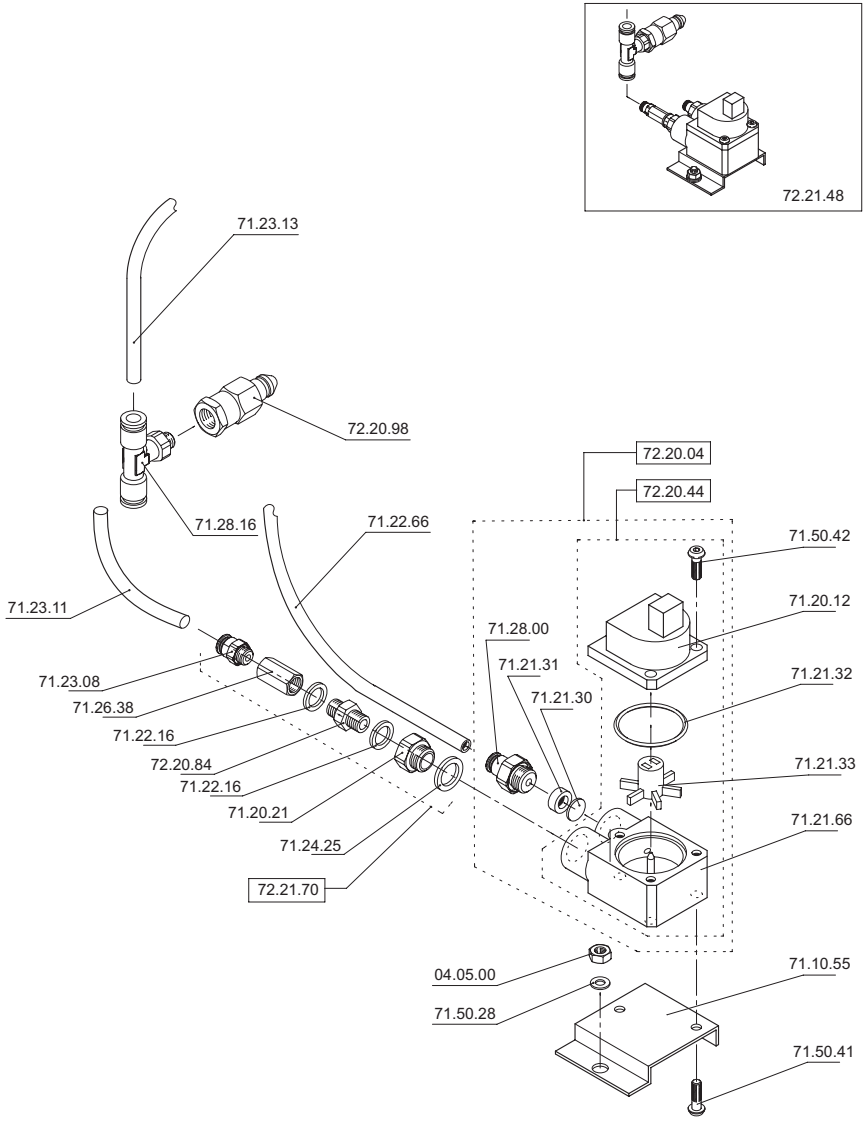

Part No	Description	Quantity
72.20.20	**Flowmeter easy, assembly**	**1**
04.05.00	Nut M5	1
71.10.55	Support plate for flowmeter	1
71.50.28	Washer M5	1
71.50.41	Tallow-drop screw KA 40x10	2
72.20.04	**Flowmeter, assembly**	**1**
71.28.00	Threaded joint 6-1/4"	1
71.21.30	Sleeve 1/4"	1
71.21.31	O-ring for flowmeter	1
72.20.44	**Flowmeter**	**1**
71.20.12	Cover for flowmeter	1
71.21.32	O-ring for flowmeter	1
71.21.33	Wheel flowmeter	1
71.21.66	Housing for flowmeter	1
71.50.42	Tallow-drop screw KA 40x16	3
72.21.70	**Check valve V3 to flowmeter, assembly**	**1**
71.24.25	Seal 1/4"	1
71.20.21	Bushing 1/4" - 1/8"	1
71.22.16	Seal 1/8"	2
72.20.84	**Valve check air valve block**	**1**
71.26.38	Threaded bushing 1/8"	1
71.23.08		1

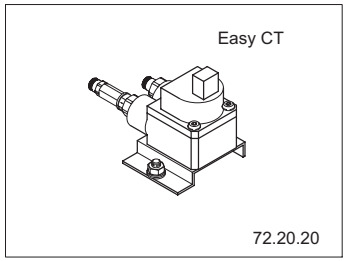

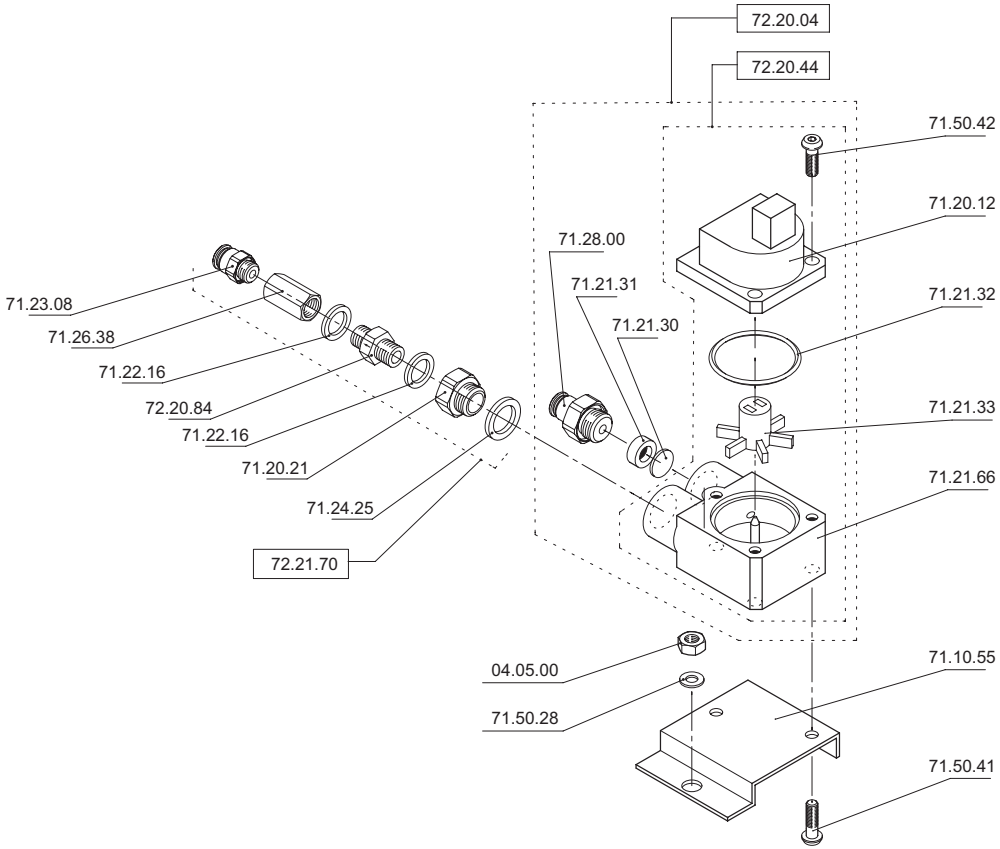

16. Powermanagement module

	Page	Revision	
		List	Drawing
Powermanagement module	16.1.1 / 16.1.2	REV.4	REV.4

Part No	Description	Quantity
72.30.00	**Powermanagement module, assembly**	**1**
10.16.00	Main switch with lens, red	1
71.10.18	Base plate (power)	1
71.30.36	Deck support piece	10
71.30.55	Power relay 3 + 1	1
71.30.70	Power	1
71.30.73	Wiring harness main current	1
71.30.98	Wiring harness weak current	1
71.30.99	Wiring harness NEFI 10A 2p main current	1
71.31.01	Wiring harness NEFI 10A 3p rel.	1
71.50.15	Oval head screw M4 x 6	2
71.50.48	Knurled nut M6	1
71.50.95	Tallow drop screw with springring	4
72.30.03	**Transformer 130VA, assembly**	**1**
90.38.00		1

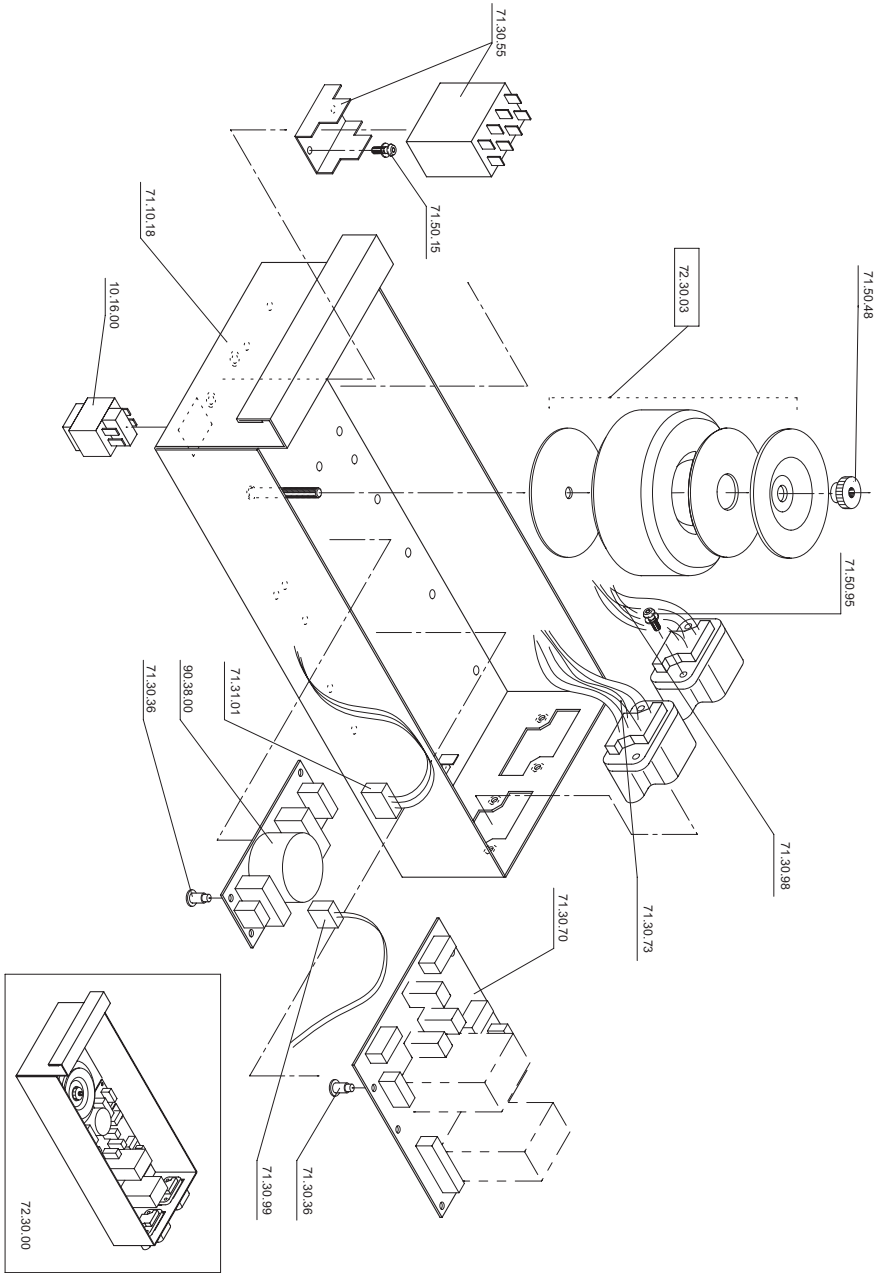

17. Tea-steam module

			Page	Revision	
				List	Drawing
Tea-steam module	3.0 kW	with pump	17.1.1 / 17.1.2	REV.4	REV.4
Tea-steam module	3.0 kW	without pump	17.1.3 / 17.1.4	REV.4	REV.4
Tea-steam module	4.2 kW	with pump	17.2.1 / 17.2.2	REV.4	REV.4
Tea-steam module	4.2 kW	without pump	17.2.3 / 17.2.4	REV.4	REV.4
T-unit module	3.0 kW		17.3.1 / 17.3.2	REV.4	REV.4
Tea-steam boiler Easyline please see hydraulic module					

Part No	Description	Quantity
72.70.63	**Tea-steam module 3.0kW w. P., assembly**	**1**
02.03.00	Security washer M3	1
04.04.00	Nut M4	1
10.16.00	Main switch with lens, red	1
71.12.16	Boiler-pan TS module	1
71.12.17	Frame TS module	1
71.12.35	Cover TS-print	1
71.20.04	O-ring ø6.07x1.78	1
71.20.38	O-ring ø6.75x1.78	2
71.20.82	Manometer 0-4 bar	1
71.20.88	Water regularion valve 1/4''-1/4	1
71.21.04	Nut G1/8"	1
71.21.15	T-connector ø6	1
71.21.17	Threaded joint 6-1/8''	1
71.21.18	Pipe ø6/4x250	1
71.21.19	Pipe ø6/4x340mm	1
71.21.53	Clip tea-steam module	1
71.21.56	T-connection	2
71.21.71	Pipe ø6/4x310mm	1
71.21.73	Tube 7/10x225mm	1
71.21.75	Tube 7/10x285mm	1
71.22.03	Straight fitting 6/4 1/8"	1
71.22.09	Pipe ø6/4x180mm	1
71.22.10	Filter for 2-way valveblock TS	1
71.22.57	Tube ø7/10x535mm	1
71.22.58	Silicontube ø7/10x175mm	1
71.23.05	Tube ø7/10x55mm	1
71.23.06	Pipe ø6/4x117mm	1
71.23.07	Pipe ø6/4x325mm	1
71.23.08	Straight connector TS 6-1/8''	2
71.23.10	Pipe ø6/4x240mm	1
71.24.16	Elbow 1/8" ø6mm	1
71.28.02	Teflon pipe ø6/4x160mm	1
71.28.03	Elbow fitting 6-1/4"	1
71.28.04	Teflon pipe ø6/4x260mm	1
71.28.07	Straight fitting 6-4/8"	1
71.28.08	T-fitting 6	1
71.28.11	Teflon pipe ø6/4x230mm	1
71.28.14	Straight fitting 6-1/4"	1
71.28.17	Braided pipe TS module	1
71.30.09	Surpression control device	1
71.30.36	Deck support piece	4
71.30.51	Relay for tea-steam module	1
71.31.00	Triac CT*	2
71.31.63	Motion TS Delicom	1
71.31.85	Fuse SMD 7A	1
71.31.86	Cable bridge relay TS module CE	1
71.31.90	Wiring harness TS CE	1
71.32.41	Blind plug TS CE	1
71.33.08	Clamp	1
71.40.24	Pipe clamp	2
71.50.04	Cheese head screw M4 x 8	8
71.50.11	Oval head screw M3 x 8	1
71.50.13	Oval head screw M4x25	1
71.50.38	Knurled screw M4 x 10	2

Part No	Description	Quantity
71.50.95	Tallow-drop screw with springring M4 x 12	2
72.70.03	**3-way solenoid valve TS**	**1**
71.23.02	Base of 3-way valve	1
72.20.02	Solenoid valve (3-way), assembly	1
71.20.62	Plugger guide 3-ways	1
71.20.79	Countersunk screw M4x10 (valve)	4
71.21.04	Nut G1/8''	1
71.21.26	O-ring ø11.11x1.78	1
71.21.29	Valve coil	1
72.20.39	**Plunger with seal for 2- and 3-way valve**	**1**
71.21.27	Seal for 2- and 3-way valve	1
71.21.28	Plugger 2- and 3-way valve	1
72.70.13	**Solenoid double valve block USA, assy**	**1**
71.20.37	Distributor2/2-2/2	1
72.20.03	**Solenoid valve 2-way, assembly**	**2**
71.20.50	Pipe 2-way	2
71.20.79	Countersunk screw M4x10 (valve)	8
71.21.04	Nut G 1/8''	2
71.21.26	O-ring ø11.11x1.78	2
71.21.27	Seal for 2- and 3- way valve	2
71.21.28	Plugger 2- and 3-way valve	2
71.21.29	Valve coil	2
72.70.65	**Water pump TS With support, assembly**	**1**
71.12.34	Pump support plate TS USA	1
71.28.06	Elbow fitting 6/6mm	2
71.40.93	Rubber mounting bush	1
71.50.13	Oval head screw M4x25	1
72.70.64	**Water pump TS, assembly**	**1**
71.28.05	Water pump TS	1
71.22.74	Rubber mounting bush for vibrapump	4
72.70.48	**Repair set pump support TS**	**2**
72.21.94	**Tea steam boiler 3.0kW incl. pump, assy**	**1**

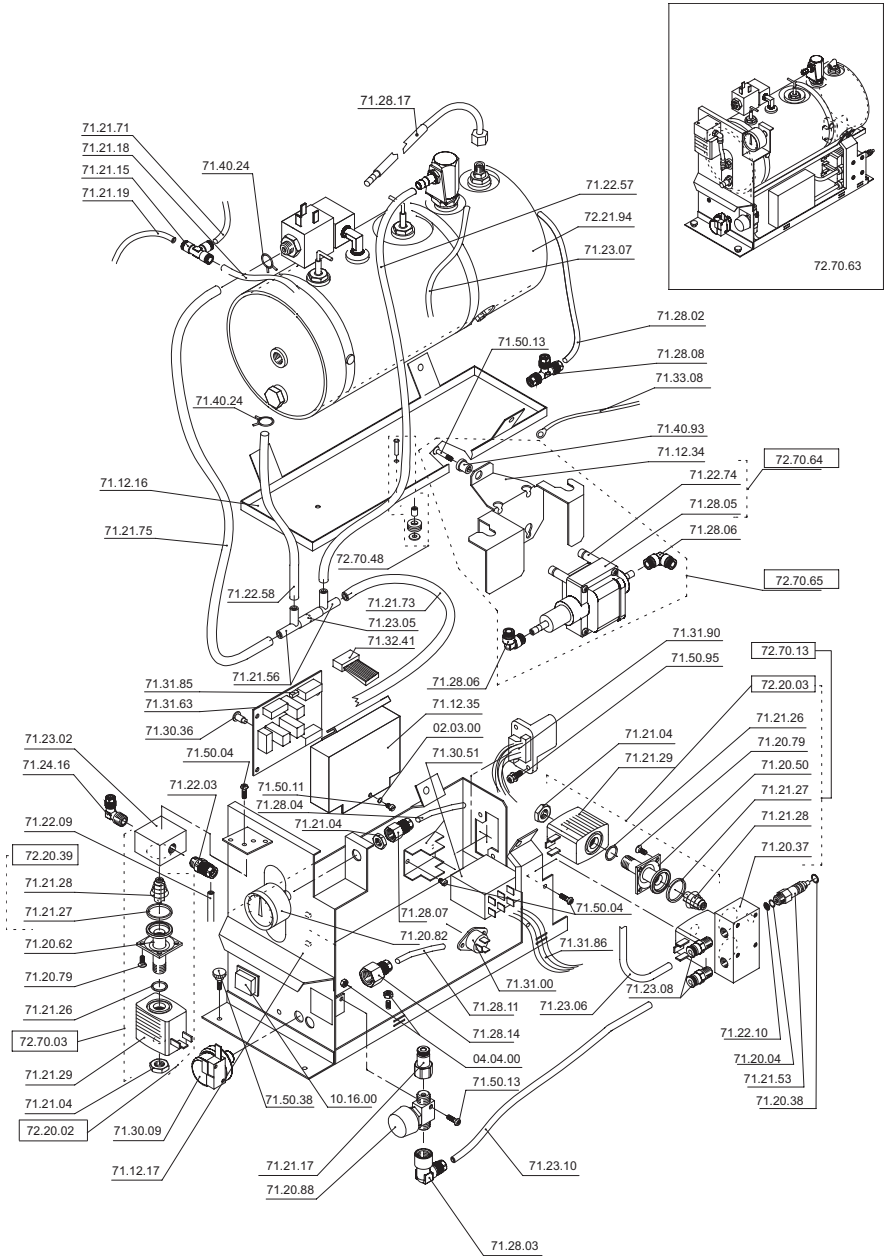

Part No	Description	Quantity
72.70.00	**Tea-steam module 3.0kW e. P., assembly**	**1**
02.03.00	Security washer M3	1
04.04.00	Nut M4	1
10.16.00	Main switch with lens, red	1
71.12.16	Boiler-pan TS module	1
71.12.17	Frame TS module	1
71.12.35	Cover TS-print	1
71.20.04	O-Ring ø6.07x1.78	1
71.20.38	O-Ring ø6.75x1.78	2
71.20.82	Manometer 0-4 bar	1
72.20.84	Valve check air valve block G1/8"	1
71.20.88	Water regularion valve 1/4''-1/4	1
71.21.04	Nut G1/8"	1
71.21.15	T-connector ø6	1
71.21.17	Threaded joint 6-1/8''	1
71.21.18	Pipe ø6/4x250mm	1
71.21.19	Pipe ø6/4x340mm	1
71.21.53	Clip tea-steam module	1
71.21.56	T-connection	2
71.21.71	Pipe ø6/4x310mm	1
71.21.73	Tube ø7/10x225mm	1
71.21.75	Tube ø7/10x285mm	1
71.22.03	Straight connector 6/4 1/8"	1
71.22.09	Pipe ø6/4x180mm	1
71.22.10	Filter for 2-way valveblock TS	1
71.22.16	Seal 1/8"	2
71.22.50	Outlet nozzle 1.3mm	1
71.22.57	Tube ø7/10x535mm	1
71.22.58	Silicontube ø7/10x175mm	1
71.23.05	Tube ø7/10x55mm	1
71.23.06	Pipe ø6/4x117mm	1
71.23.07	Pipe ø6/4x325mm	1
71.23.08	Straight connector TS 6-1/8''	2
71.23.10	Pipe ø6/4x240mm	1
71.24.16	Elbow 1/8" ø6mm	1
71.28.02	Teflon pipe ø6/4x160mm	1
71.28.03	Elbow fitting 6-1/4"	1
71.28.04	Teflon pipe ø6/4x260mm	1
71.28.07	Straight fitting 6-4/8"	1
71.28.08	T-fitting 6	1
71.28.10	Straight fiting 8-1/8"	1
71.28.11	Teflon pipe ø6/4x230mm	1
71.28.14	Straight fitting 6-1/4"	1
71.30.09	Surpression control device	1
71.30.36	Deck support piece	4
71.30.51	Relay for tea-steam module 4+1 15A CE	1
71.31.00	Triac CT*	2
71.31.63	Motion TS Delicom	1
71.31.85	Fuse SMD 7A	1
71.31.86	Cable bridge relay TS module CE	1
71.31.90	Wiring harness TS CE	1
71.32.41	Blind plug TS CE	1
71.33.08	Clamp	1
71.40.24	Pipe clamp	2
71.50.04	Cheese head screw M4 x 8	8

Part No	Description	Quantity
71.50.11	Oval head screw M3 x 8	1
71.50.13	Oval head screw M4x25	1
71.50.38	Knurled screw M4x10	2
71.50.95	Tallow-drop screw with springring M4x12	2
72.70.03	**3-way solenoid valve TS**	**1**
71.23.02	Base of 3-way valve	1
72.20.02	**Solenoid valve (3-way), assembly**	**1**
71.20.62	Plugger guide 3-ways	1
71.20.79	Countersunk scre M4x10 (valve)	4
71.21.04	Nut G1/8''	1
71.21.26	O-ring ø11.11x1.78	1
71.21.29	Valve coil	1
72.20.39	**Plunger with seal for 2- and 3-way valve**	**1**
71.21.27	Seal for 2- and 3-way valve	1
71.21.28	Plugger 2- and 3-way valve	1
72.70.13	**Solenoid double valve block USA, assy**	**1**
71.20.37	Distributor2/2-2/2	1
72.20.03	**Solenoid valve 2-way, assembly**	**2**
71.20.50	Pipe 2-way	2
71.20.79	Countersunk screw M4x10 (valve)	8
71.21.04	Nut G 1/8''	2
71.21.26	O-ring ø11.11x1.78	2
71.21.27	Seal for 2- and 3- way valve	2
71.21.28	Plugger 2- and 3-way valve	2
71.21.29	Valve coil	2
72.70.11	**Tea steam boiler 3.0kW e. P., assembly**	**1**

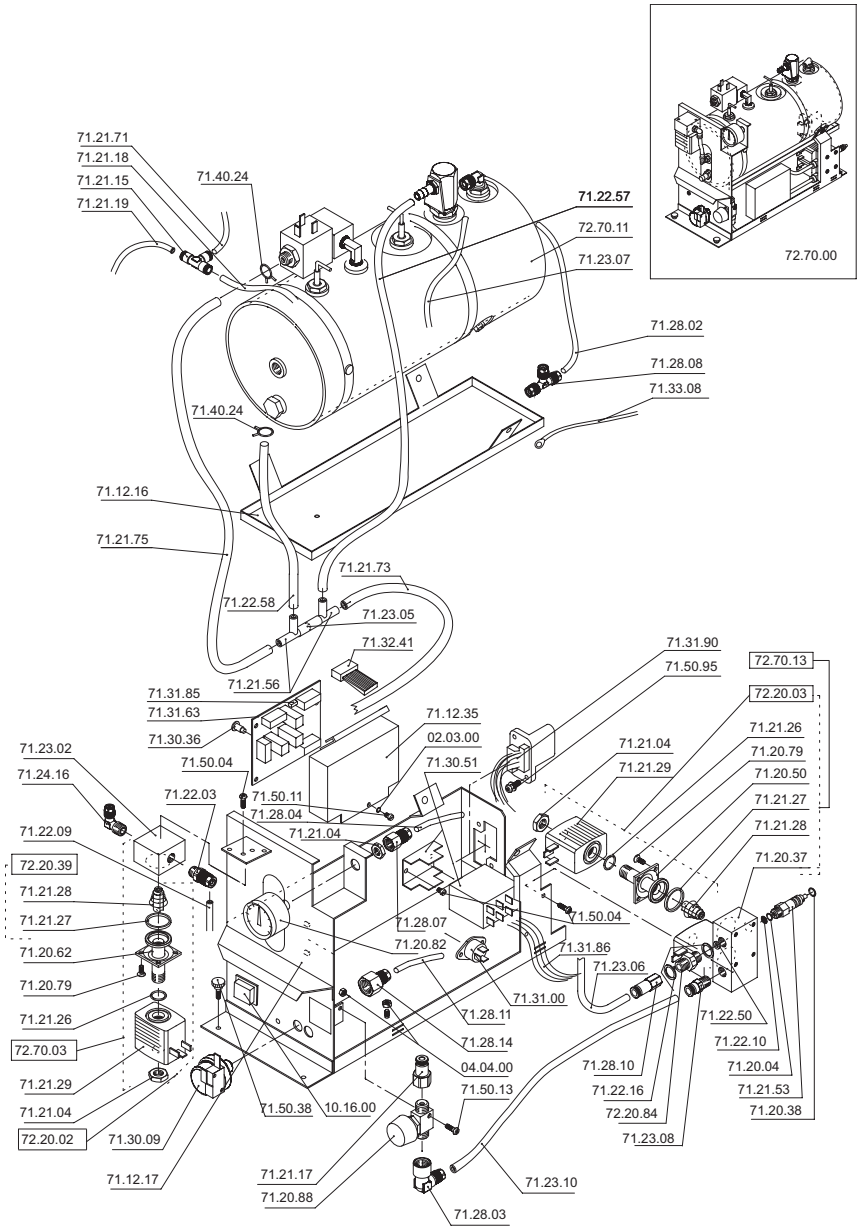

Part No	Description	Quantity
72.70.29	**Tea-steam module 4.2kW w. P., assembly**	**1**
02.03.00	Security washer M3	1
04.04.00	Nut M4	1
10.16.00	Main switch with lens, red	1
71.12.16	Boiler-pan TS module	1
71.12.17	Frame TS module	1
71.12.35	Cover TS-print	1
71.20.04	O-Ring ø6.07x1.78	1
71.20.38	O-Ring ø6.75x1.78	2
71.20.82	Manometer 0-4 bar	1
71.20.88	Water regularion valve 1/4''-1/4	1
71.21.04	Nut G1/8"	1
71.21.15	T-connector ø6	1
71.21.17	Threaded joint 6-1/8''	1
71.21.18	Pipe ø6/4x250	1
71.21.53	Clip tea-steam module	1
71.21.56	T-connection	2
71.21.71	Pipe ø6/4x310mm	1
71.21.73	Tube ø7/10x225mm	1
71.21.75	Tube ø7/10x285mm	1
71.22.03	Straight connector 6/4 1/8"	1
71.22.09	Pipe ø6/4x180mm	1
71.22.10	Filter for 2-way valveblock TS	1
71.22.57	Tube ø7/10x535mm	1
71.22.58	Silicontube 7/10x175mm	1
71.23.05	Tube ø7/10x55mm	1
71.23.06	Pipe ø6/4x117mm	1
71.23.08	Straight connector TS 6-1/8''	2
71.23.10	Pipe ø6/4x240mm	1
71.24.16	Elbow 1/8" ø6mm	1
71.28.02	Teflon pipe ø6/4x160mm	1
71.28.03	Elbow fitting 6-1/4"	1
71.28.04	Teflon pipe ø6/4x260mm	1
71.28.07	Straight fitting 6-4/8"	1
71.28.08	T-fitting 6	1
71.28.11	Teflon pipe ø6/4x230mm	1
71.28.14	Straight fitting 6-1/4"	1
71.28.15	Tea pipe ø6/4x320	1
71.28.17	Braided pipe TS module	1
71.30.09	Surpression control device	1
71.30.36	Deck support piece	4
71.31.54	Relay 4+1 20A USA	1
71.31.00	Triac CT*	2
71.31.63	Motion TS Delicom	1
71.31.66	Cable bridge relay TS module CE	1
71.31.85	Fuse SMD 7A	1
71.32.05	Wiring harness TS unit 4.2KW	1
71.32.41	Blind plug TS CE	1
71.33.08	Clamp	1
71.40.24	Pipe clamp	2
71.50.04	Cheese head screw M4x8	8
71.50.11	Oval head screw M3x8	1
71.50.13	Oval head screw M4x25	1
71.50.38	Knurled screw M4x10	2

Part No	Description	Quantity
71.50.95	Tallow-drop screw with springring M4x12	2
72.70.03	**3-way solenoid valve TS**	**1**
71.23.02	Base of 3-way valve	1
72.20.02	**Solenoid valve (3-way), assembly**	**1**
71.20.62	Plugger guide 3-ways	1
71.20.79	Countersunk screw M4x10 (valve)	4
71.21.04	Nut G1/8''	1
71.21.26	O-ring ø11.11x1.78	1
71.21.29	Valve coil	1
72.20.39	**Plunger with seal for 2- and 3-way valve**	**1**
71.21.27	Seal for 2- and 3-way valve	1
71.21.28	Plugger 2- and 3-way valve	1
72.70.13	**Solenoid double valve block USA, assy**	**1**
71.20.37	Distributor2/2-2/2	1
72.20.03	**Solenoid valve 2-way, assembly**	**2**
71.20.50	Pipe 2-way	2
71.20.79	Countersunk screw M4x10 (valve)	8
71.21.04	Nut G 1/8''	2
71.21.26	O-ring ø11.11x1.78	2
71.21.27	Seal for 2- and 3- way valve	2
71.21.28	Plugger 2- and 3-way valve	2
71.21.29	Valve coil	2
72.70.28	**Tea steam boiler 4.2kW w. P., assembly**	**1**
72.70.65	**Water pump TS With support, assembly**	**1**
71.12.34	Pump support plate TS USA	1
71.28.06	Elbow fitting 6/6mm	2
71.40.93	Rubber mounting bush	1
71.50.13	Oval head screw M4x25	1
72.70.64	**Water pump TS, assembly**	**1**
71.28.05	Water pump TS	1
71.22.74	Rubber mounting bush for vibrapump	4
72.70.48	**Repair set pump support TS**	**2**

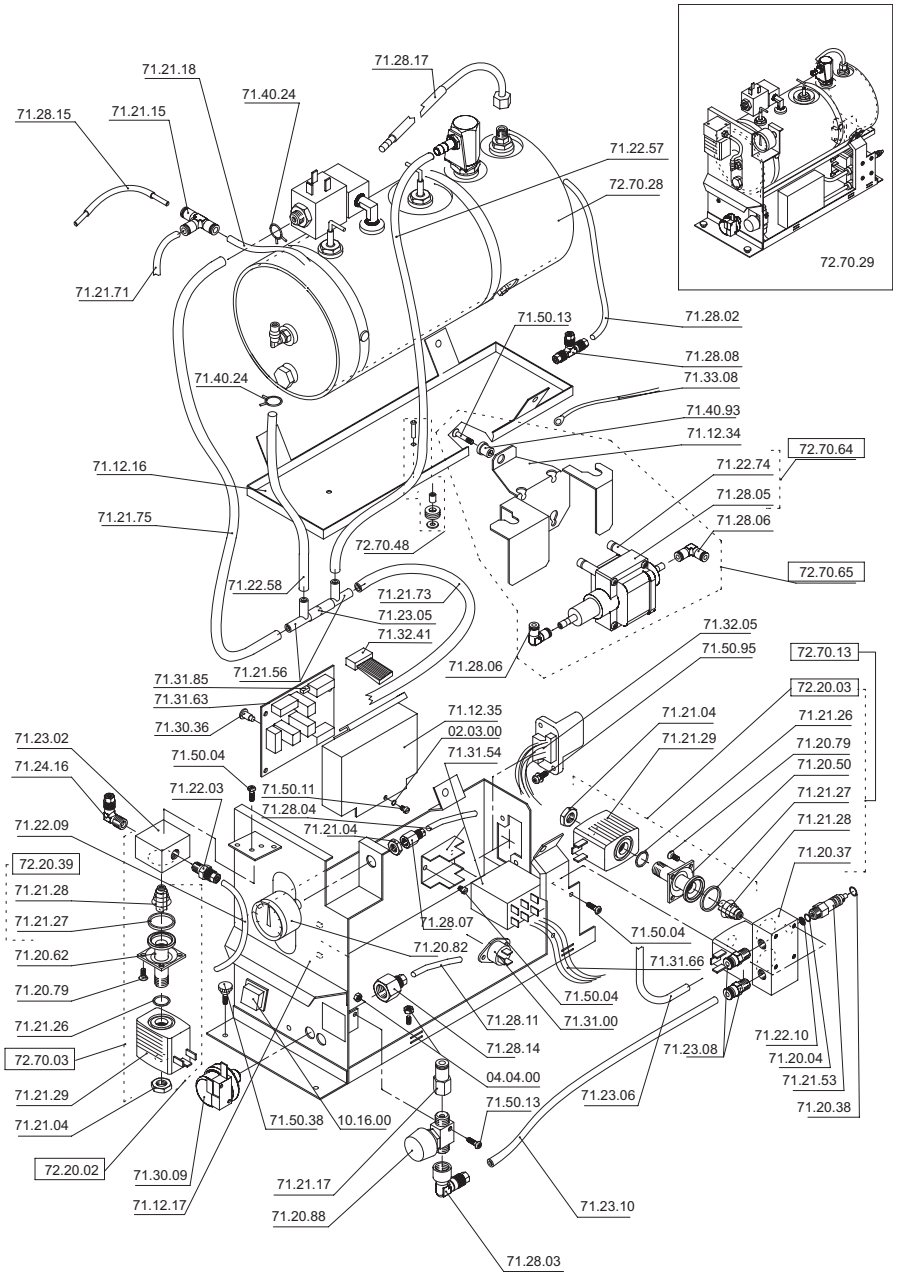

Part No	Description	Quantity
72.70.31	**Tea-steam module 4.2kW e. P., assembly**	**1**
02.03.00	Security washer M3	1
04.04.00	Nut M4	1
10.16.00	Main switch with lens, red	1
71.12.16	Boiler-pan TS module	1
71.12.17	Frame TS module	1
71.12.35	Cover TS-print	1
71.20.04	O-Ring ø6.07x1.78	1
71.20.38	O-Ring ø6.75x1.78	2
71.20.82	Manometer 0-4 bar	1
72.20.84	Valve check air valve block G1/8"	1
71.20.88	Water regularion valve 1/4''-1/4	1
71.21.04	Nut G1/8"	1
71.21.15	T-connector ø6	1
71.21.17	Threaded joint 6-1/8''	1
71.21.18	Pipe ø6/4x250	1
71.21.53	Clip tea-steam module	1
71.21.56	T-connection	2
71.21.71	Pipe ø6/4x310mm	1
71.21.73	Tube ø7/10x225mm	1
71.21.75	Tube ø7/10x285mm	1
71.22.03	Straight connector 6/4 1/8"	1
71.22.09	Pipe ø6/4x180mm	1
71.22.10	Filter for 2-way valveblock TS	1
71.22.16	Seal 1/8"	2
71.22.50	Outlet nozzle 1.3mm	1
71.22.57	Tube ø7/10x535mm	1
71.22.58	Silicontube ø7/10x175mm	1
71.23.05	Tube ø7/10x55mm	1
71.23.06	Pipe ø6/4x117mm	1
71.23.07	Pipe ø6/4x325mm	1
71.23.08	Straight connector TS 6-1/8''	1
71.23.10	Pipe ø6/4x240mm	1
71.24.16	Elbow 1/8" ø6mm	1
71.28.02	Teflon pipe ø6/4x160mm	1
71.28.03	Elbow fitting 6-1/4"	1
71.28.04	Teflon pipe ø6/4x260mm	1
71.28.07	Straight fitting 6-4/8"	1
71.28.08	T-fitting 6	1
71.28.10	Straight fiting 8-1/8"	1
71.28.11	Teflon pipe ø6/4x230mm	1
71.28.14	Straight fitting 6-1/4"	1
71.28.15	Tea pipe ø6/4x320	1
71.30.09	Surpression control device	1
71.30.36	Deck support piece	4
71.31.54	Relay 4+1 20A USA	1
71.31.00	Triac CT*	2
71.31.63	Motion TS Delicom	1
71.31.66	Cable bridge relay TS module CE	1
71.31.85	Fuse SMD 7A	1
71.32.05	Wiring harness TS module 4.2KW	1
71.32.41	Blind plug TS CE	1
71.33.08	Clamp	1
71.40.24	Pipe clamp	2
71.50.04	Cheese head screw M4x8	8

Part No	Description	Quantity
71.50.11	Oval head screw M3x8	1
71.50.13	Oval head screw M4x25	1
71.50.38	Knurled screw M4x10	2
71.50.95	allow-drop screw with springring M4x12	2
72.70.03	**3-way solenoid valve TS**	**1**
71.23.02	Base of 3-way valve	1
72.20.02	**Solenoid valve (3-way), assembly**	**1**
71.20.62	Plugger guide 3-ways	1
71.20.79	Countersunk screw M4x10 (valve)	4
71.21.04	Nut G1/8''	1
71.21.26	O-ring ø11.11x1.78	1
71.21.29	Valve coil	1
72.20.39	**Plunger with seal for 2- and 3-way valve**	**1**
71.21.27	Seal for 2- and 3-way valve	1
71.21.28	Plugger 2- and 3-way valve	1
72.70.13	**Solenoid double valve block USA, assy**	**1**
71.20.37	Distributor 2/2-2/2	1
72.20.03	**Solenoid valve 2-way, assembly**	**2**
71.20.50	Pipe 2-way	2
71.20.79	Countersunk screw M4x10 (valve)	8
71.21.04	Nut G 1/8''	2
71.21.26	O-ring ø11.11x1.78	2
71.21.27	Seal for 2- and 3- way valve	2
71.21.28	Plugger 2- and 3-way valve	2
71.21.29	Valve coil	2
72.70.30	**Tea steam boiler 4.2kW e. P., assembly**	**1**

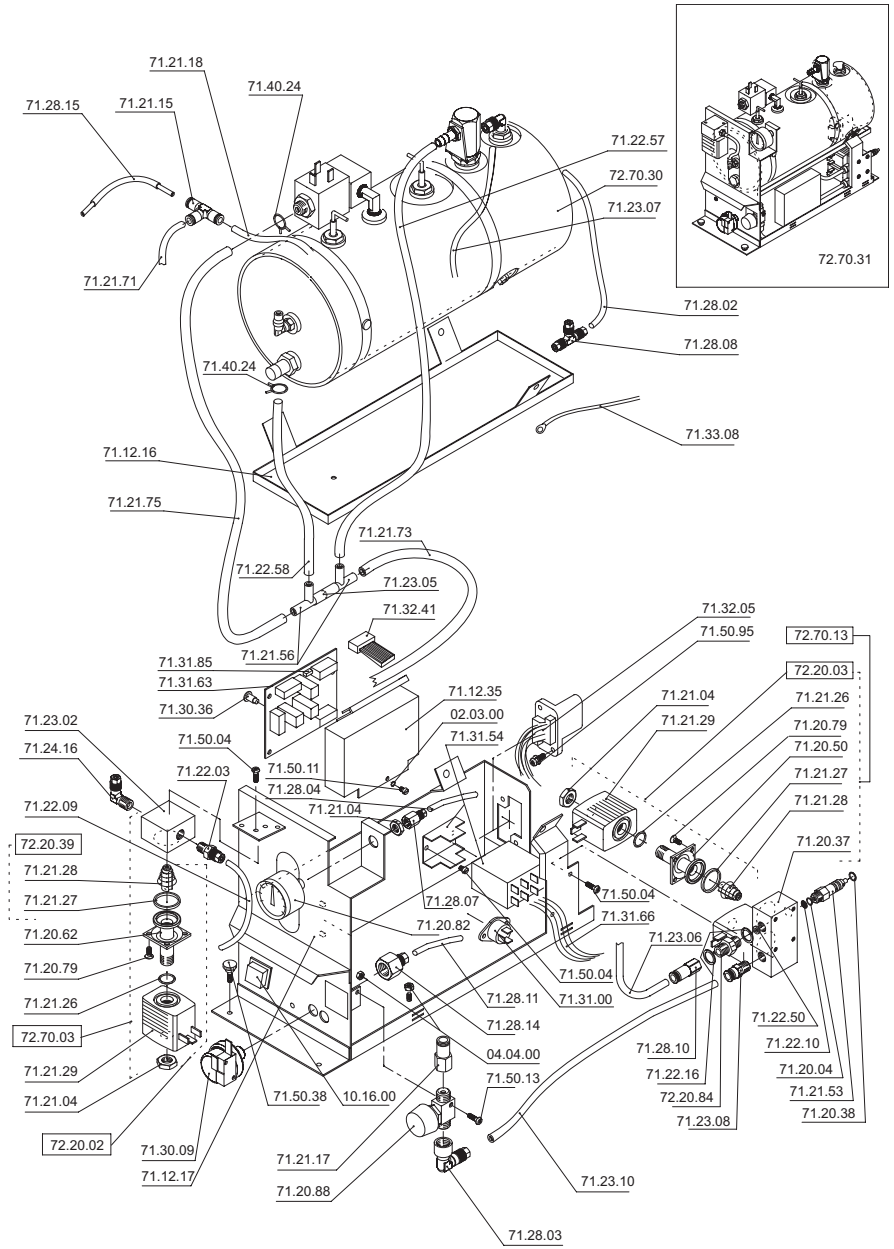

Part No	Description	Quantity
72.22.62	Tea module 3.0kW, assembly	1
02.03.00	Security washer M3	1
04.04.00	Nut M4	1
10.16.00	Main switch with lens, red	1
71.12.16	Boiler-pan TS module	1
71.12.17	Frame TS module	1
71.12.35	Cover TS-print	1
71.20.0153	Block waterinlet T-Unit	1
71.20.0198	Teflon pipe ø6/4x310mm	1
71.20.0200	Teflon pipe ø6/4x230mm	1
71.20.04	O-Ring ø6.07x1.78	1
71.20.15	Manometer 0-16 bar	1
71.20.38	O-Ring ø6.75x1.78	1
71.21.04	Nut G1/8"	1
71.21.53	T-connector ø6	1
71.22.10	Filter for 2-way valveblock TS	1
71.22.16	Seal 1/8"	2
71.28.07	Straight fitting 6-4/8"	1
71.28.10	Straight fiting 8-1/8"	1
71.30.36	Deck support piece	1
71.30.51	Relay for tea-steam module 4+1 15A CE	1
71.30.91	Flat cable TS 10p, Keyboard-Main-print	1
71.31.00	Triac CT	2
71.31.85	Fuse SMD 7A	1
71.31.90	Wiring harness TS CE	1
71.33.08	Grounding cable TS	1
71.36.31	Motionprint T-Unit	1
71.50.04	Cheese head screw M4 x 8	4
71.50.11	Oval head screw M3 x 8	1
71.50.38	Knurled screw M4x10	1
71.50.95	Tallow-drop screw with springring M4x12	1
72.20.84	Valve check air valve block G1/8"	1
72.22.61		1

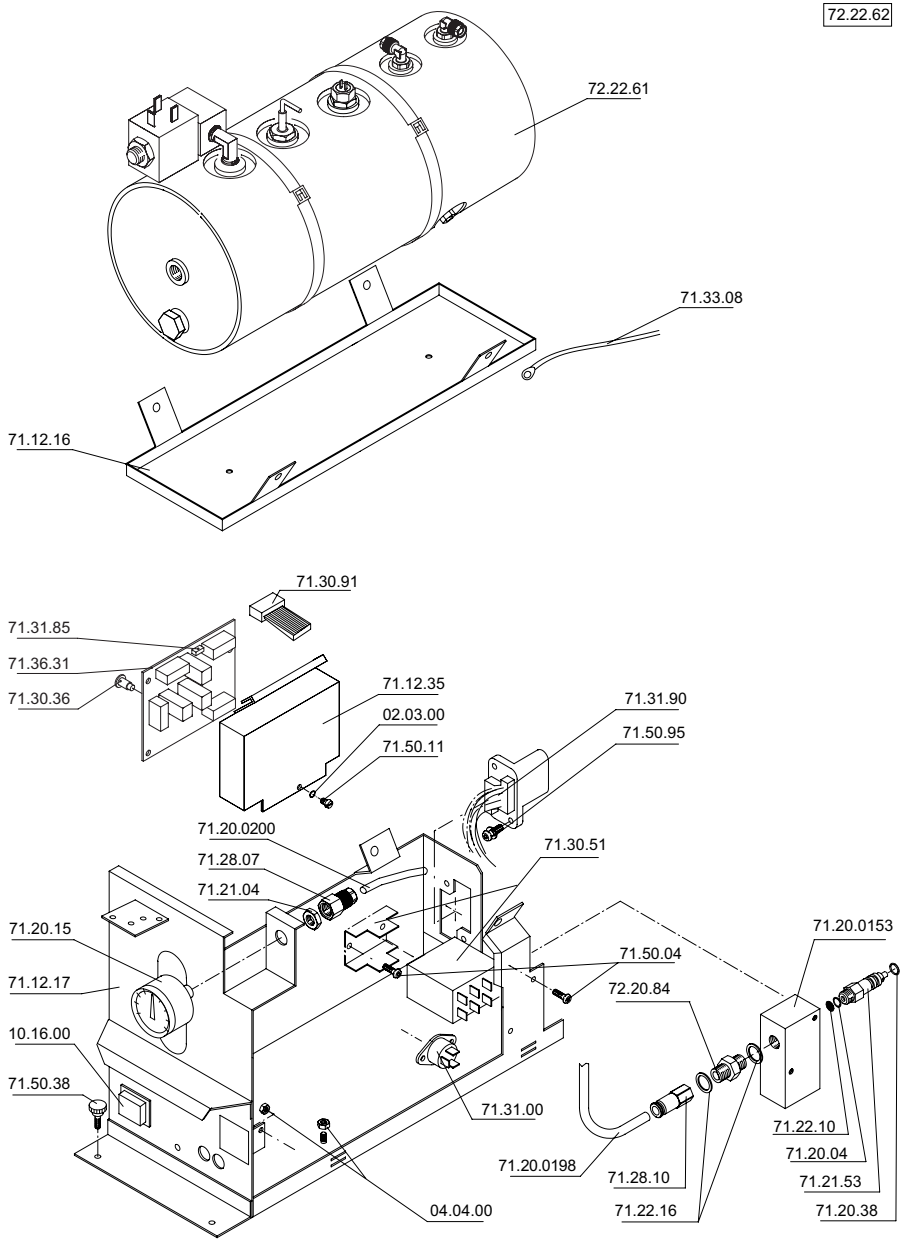

18. Tea-steam boiler

			Page	Revision	
				List	Drawing
Tea-steam boiler	3.0 kW	with and without pump	18.1.1 / 18.1.2	REV.4	REV.4
Tea-steam boiler	4.2 kW	with and without pump	18.2.1 / 18.2.2	REV.4	REV.4
Tea-steam boiler	MF5-T		18.3.1 / 18.3.2	REV.4	REV.4
T-unit boiler	3.0 kW		18.4.1 / 18.4.2	REV.4	REV.4

Part No	Description	Quantity
72.70.11	**Tea-steam boiler 3.0kW without pump, assembly**	**1**
00.06.00	U-washer M6	3
04.06.00	Nut M6	3
71.21.54	Pipe ø6/4x430	1
71.21.80	Threaded elbow connector steam valve	1
71.21.83	Boiler TS	1
71.22.13	Water inlet fitting TS	1
71.22.29	Drain plug TS 3/8'' 6pans	1
71.22.31	Seal 3/8''	1
71.22.39	Reduction TS 1/4-3/8''	1
71.22.55	Insulating tube	2
71.22.56	Seal for heater TS-boiler	2
71.23.70	Protection tube 145mm	2
71.28.12	Elbow 1/8'' ø8mm	1
71.28.01	Elbow fitting 6-1/4''K	3
71.30.58	Temperature control	2
71.31.36	Heater 1.5KW, TS	2
71.40.76	Insulation fixing band	2
71.40.79	Boiler insulation TS	1
71.50.98	Nut M6 for TS-boiler	3
72.70.09	**Steam valve ø 4, assembly**	**1**
71.22.88	Plugger for steam valve	1
71.22.91	Coil for valve	1
71.22.92	Plunger guide 3-way	1
71.22.93	Nut for valve	1
71.22.94	Base of steam valve	1
72.70.14	**Niveau probe V2, assembly**	**1**
71.22.61	Nut for Probe TS V3	1
71.22.64	Teflon pipe probe TS V3	1
71.22.87	Nut for probe TS	1
71.32.52	Level probe V3 TS	1
72.70.15	**Security probe V2, assembly**	**1**
71.22.61	Nut for probe TS, assembly	1
71.22.64	Teflon pipe probe TS V3	1
71.22.87	Nut for probe TS	1
71.32.51	Security probe V3 TS	1
72.70.54	**Security valve TS CE, assembly**	**1**
71.12.18	Security plate for security-valve TS	1
71.22.23	Security valve body	1
71.22.25	O-ring ø17.17x1.78	1
71.22.28	Nipple ø9x1/8'' security valve	1
71.25.67	Security valve base	1
72.70.44	**Spare parts kit security valve TS CE**	**1**
72.21.94	**Tea steam boiler 3.0KW with pump, assembly**	**1**
71.20.22	Threaded union 1/8''	1

The other parts correspond to those from tea-steam boiler without pump!

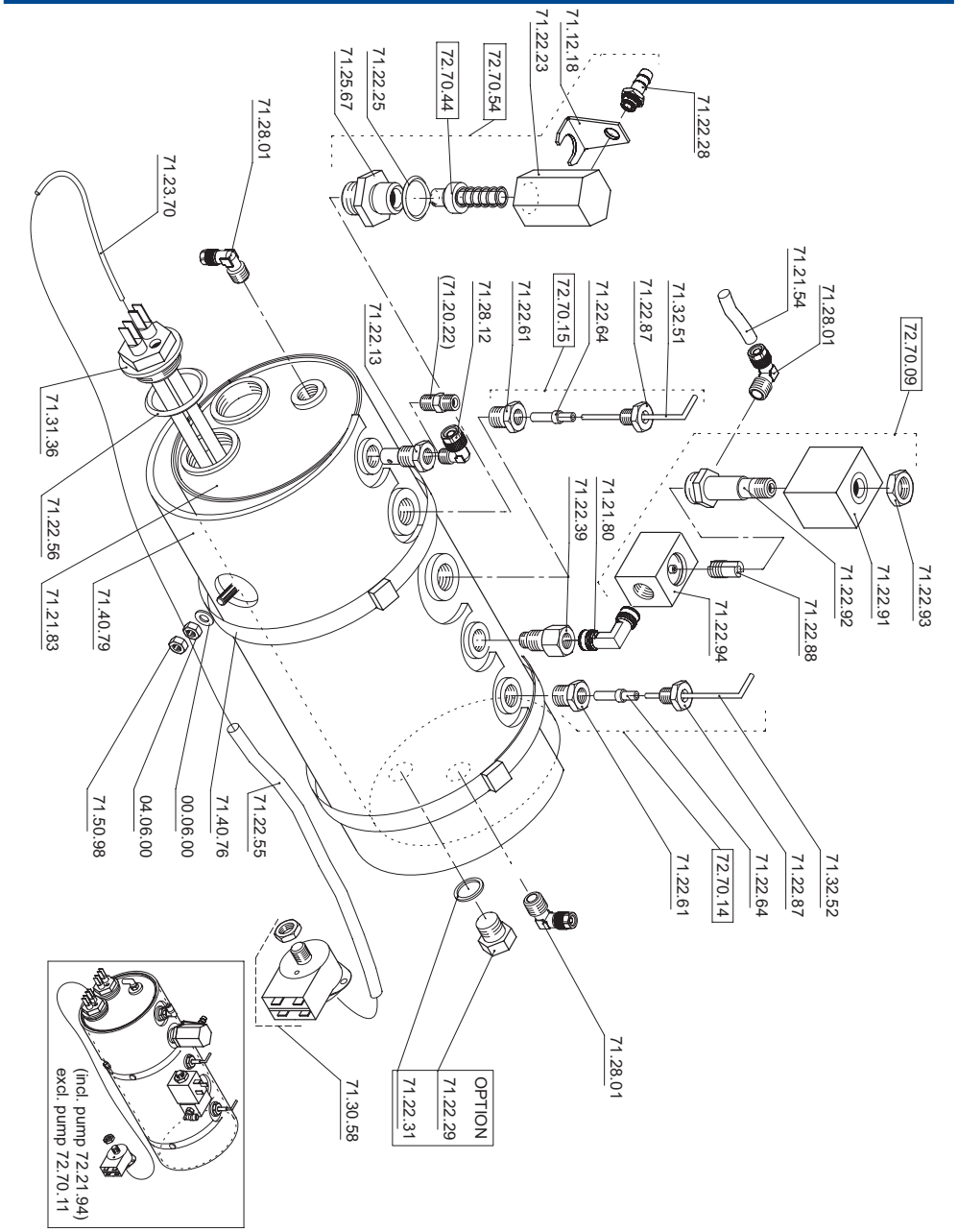

Part No	Description	Quantity
72.70.30	**Tea steam boiler 4.2KW without pump, assembly**	**1**
00.06.00	U-washer M6	3
04.06.00	Nut M6	3
71.21.80	Threaded elbow connector steam valve	1
71.21.83	Boiler TS	1
71.22.13	Water inlet fitting TS	1
71.22.29	Drain plug TS 3/8'' 6pans	1
71.22.31	Seal 3/8''	1
71.22.39	Reduction TS 1/4-3/8''	1
71.22.55	Insulating tube	2
71.22.56	Seal for heater TS-boiler	2
71.23.70	Protection tube 145mm	2
71.28.12	Elbow fitting 8-1/8"K	1
71.28.01	Elbow fitting 6-1/4"K	2
71.28.09	Elbow fitting 8-1/4"K	1
71.28.13	**Steam pipe ø8/6x450**	**1**
71.24.23	Angle protection steam pipe	1
71.30.58	Temperature control	2
71.31.36	Heater 1.5KW, TS	2
71.31.68	Heater 2.7KW, TS	2
71.40.76	Insulation fixing band	2
71.40.79	Boiler insulation TS	1
71.50.98	Nut M6 for TS-boiler	3
72.70.09	**Steam valve ø 4, assembly**	**1**
71.22.88	Plugger for steam valve	1
71.22.91	Coil for valve	1
71.22.92	Plunger guide 3-way	1
71.22.93	Nut for valve	1
71.22.94	Base of steam valve	1
72.70.14	**Niveau probe V2, assembly**	**1**
71.22.61	Nut for Probe TS V3	1
71.22.64	Teflon pipe probe TS V3	1
71.22.87	Nut for probe TS	1
71.32.52	Level probe V3 TS	1
72.70.15	**Security probe V2, assembly**	**1**
71.22.61	Nut for probe TS V3	1
71.22.64	Teflon pipe probe TS V3	1
71.22.87	Nut for probe TS	1
71.32.51	Security probe V3 TS	1
72.70.54	**Security valve TS CE, assembly**	**1**
71.12.18	Security plate for security-valve TS	1
71.22.23	Security valve body	1
71.22.25	O-ring ø17.17x1.78	1
71.22.28	Nipple ø9x1/8'' security valve	1
71.25.67	Security valve base	1
72.70.44	**Spare parts kit security valve TS CE**	**1**
72.70.28	**Tea steam boiler 4.2KW with pump, assembly**	**1**
71.20.22	Threaded union 1/8''	1

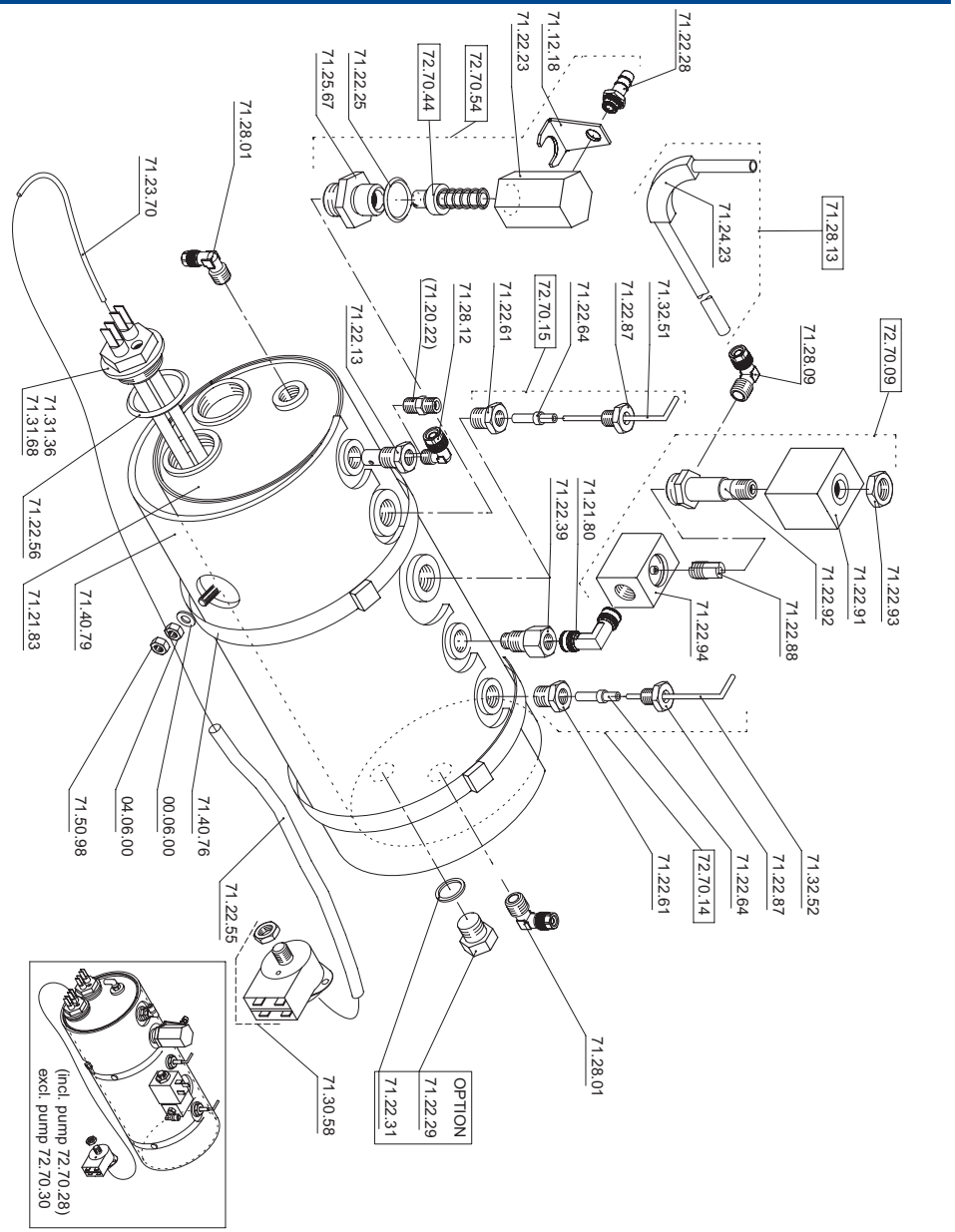

Part No	Description	Quantity
72.60.25	**Boiler MF5T, assembly**	**1**
00.06.00	U-washer M6	3
04.06.00	Nut M6	6
71.20.15	Manometer 0 to 16 bar	1
71.20.18	Reduction 3/8''-1/8''	2
71.20.22	Threaded union 1/8''	3
71.20.25	Threaded elbow joint 1/8''	2
71.21.04	Nut G1/8''	1
71.21.83	Boiler TS	1
71.22.03	Straight fitting undercounter 6-1/8''	1
71.22.29	Train plug TS 3/8'' 6pans	2
71.22.31	Seal 3/8''	1
71.22.61	Nut for probe TS, V3	1
71.22.56	Seal for heater TS-boilere	2
71.24.16	Elbow 1/8'' ø6mm	1
71.24.79	Locking pin G1/4''	1
71.25.07	O-ring ø10.82x1.78	1
71.26.80	Screw 1/4''	1
71.26.81	Heating transfer block	1
71.26.83	Pipe ø6/4x1000mm	1
71.26.84	Tube ø7/10x1150mm	1
71.26.85	Reduction 3/8''	1
71.27.27	Entrance pipe	1
71.27.81	Tube ø6/4x95mm	1
71.27.82	Tube ø6/4x100mm	1
71.28.24	T-piece 6-6-1/8''K	1
71.30.06	Sefety device for boiler	2
71.31.36	Heater 1.5kW, TS	2
71.34.14	NTC 10 kOhm	1
71.40.76	Insulation fixing band	2
71.40.79	Boiler insulation TS	1
71.42.85	Insulation TS rear	1
71.50.98	Nut M6	3
71.60.30	Support plate for boiler	1
72.20.42	**Valve 2-way, assembly**	**1**
71.22.91	Coil for valve	1
71.22.93	Nut for valve	1
71.23.17	Plunger guide 2-way	1
71.23.18	Plunger for valve	1
71.23.20	Valve base tea 2-way	1
72.21.16	**Pressure control valve 7.5bar, assembly**	**1**
72.21.32	**Drain tube, assembly**	**1**
71.40.71	Drain tube 2.5m	2
72.21.71	**T-piece CT-MF5T**	**1**
71.36.32		1

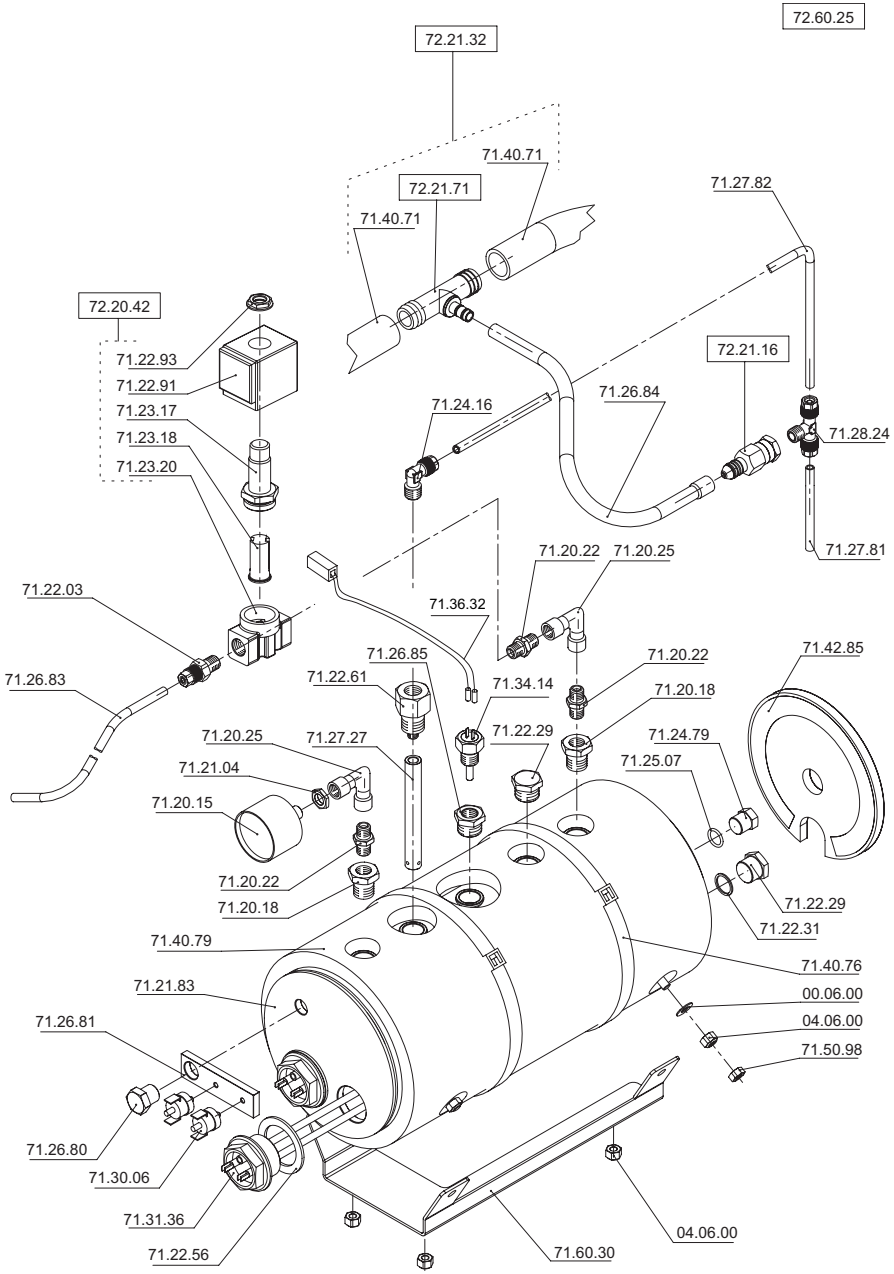

Part No	Description	Quantity
72.22.61	**T-unit boiler 3.0kW without pump, assembly**	**1**
00.06.00	U-washer M6	3
04.06.00	Nut M6	3
71.20.0192	Teflon pipe ø6/4x390	1
71.20.0198	Teflon pipe ø6/4x310	1
71.20.0199	Teflon pipe ø6/4x60	1
71.20.0200	Teflon pipe ø6/4x230	1
71.20.0201	Silicon tube ø7/10x510	1
71.20.18	Reduction 3/8 -1/8	2
71.20.22	Threaded union 1/8''	2
71.20.25	Threaded elbow joint 1/8"	1
71.21.83	Boiler TS	1
71.22.55	Insulating tube	2
71.22.56	Seal for heater TS-boiler	2
71.22.61	Nut for probe TS, V3	2
71.22.64	Teflon pipe probe TS V3	1
71.22.87	Nut for probe TS	1
71.23.70	Protection tube 145mm	2
71.24.16	Elbow fitting 1/8'' ø6mm	3
71.24.79	Closing cap G1/4"	2
71.25.07	O-ring ø10.82x1.78	2
71.26.85	Reduction 3/8	1
71.27.27	inlet pipe	1
71.28.24	T-fitting 6-6-1/8"K	1
71.30.58	Temperature control	2
71.31.36	Heater 1.5KW, TS	2
71.32.51	Security probe V3 TS	1
71.34.02	Terminal clamp	1
71.34.14	NTC 10kOhm	1
71.36.32	Cable junction NTC Sensor	1
71.40.69	Cable tie 85/22	2
71.40.76	Cable tie 550x8.9	2
71.40.79	Boiler insulation TS	1
71.42.85	Rear isolation TS	1
71.50.98	Nut M6 for TS-boiler	3
72.21.16	**Pressure valve 7.5 bar, assembly**	**1**
72.20.42	**Valve 2-way, assembly**	**1**
71.22.91	Coil for valve	1
71.22.93	Nut for valve	1
71.23.17	Plunger guide 2-way	1
71.23.18	Plunger for valve	1
71.23.20		1

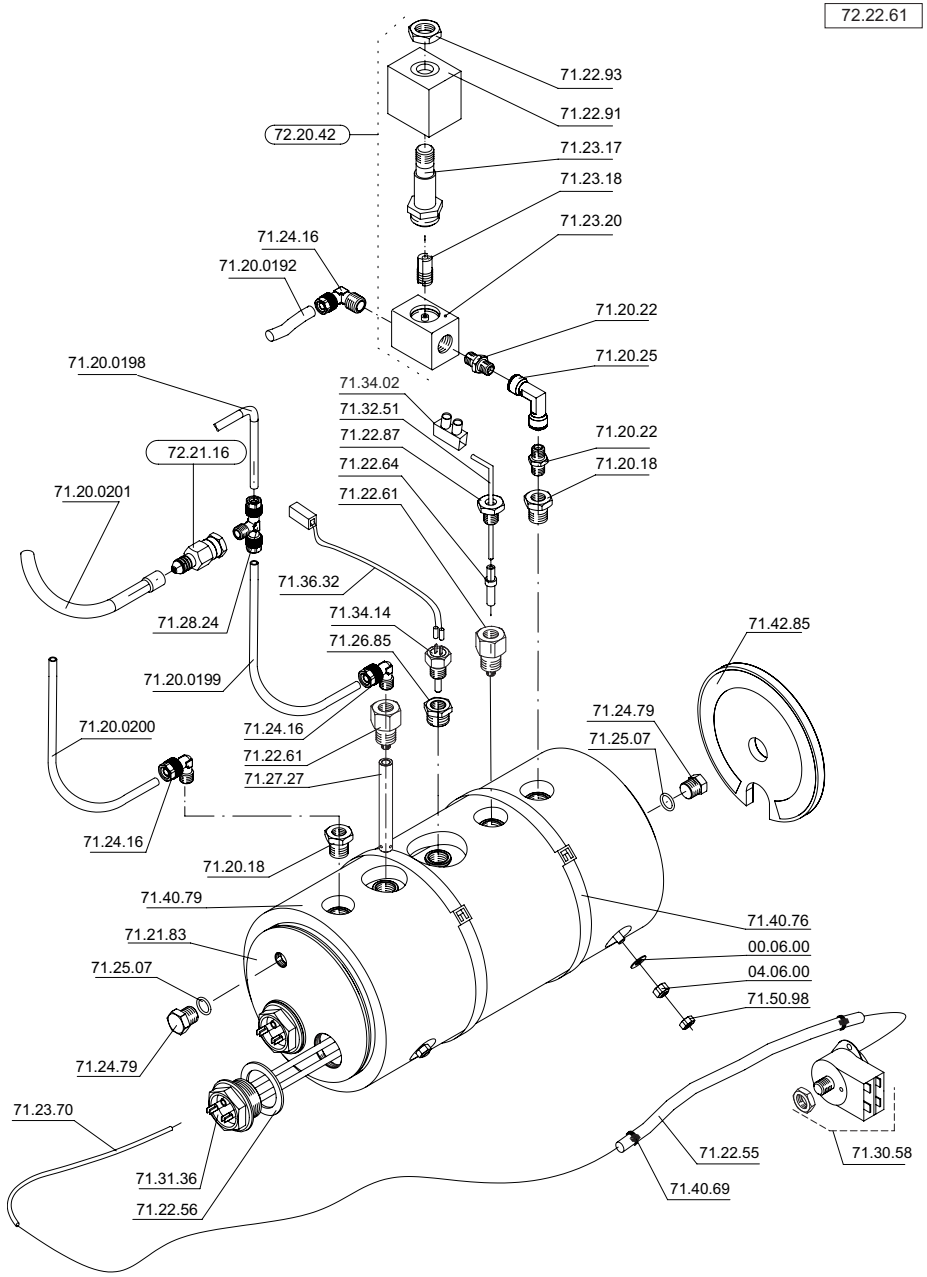

19. Foamer module

				Page	Revision	
					List	Drawing
Foamer module	Foamer module 2			19.1.1 / 19.1.2	REV.4	REV.4
Foamer module	Foamer module 2	undercounter		19.2.1 / 19.2.2	REV.4	REV.4
Foamer pumpe with socle		undercounter		19.2.3 / 19.2.4	REV.4	REV.4
Foamer module	Foamer module 5			19.3.1 / 19.3.2	REV.4	REV.4
Foamer module	Foamer module 10			19.4.1 / 19.4.2	REV.4	REV.4
Foamer module	MF5-T			19.5.1 / 19.5.2	REV.4	REV.4
Foamer module	Foamino	easyline		19.6.1 / 19.6.2	REV.4	REV.4
Foamer module	Foamino	easyline	V2	19.6.3 / 19.6.4	REV.4	REV.4

Part No	Description	Quantity
72.60.00	**Foamer module assembly**	**1**
10.51.00	Cleaning brush	1
71.10.19	Casing foamer module	1
71.30.25	Wiring harness foamer module	1
71.30.78	Faston 45°	1
71.45.67	Edge protection 160mm	1
71.50.09	Cheese head screw M4x12	1
71.50.38	Knurled screw M4x10	2
71.50.95	Tallow-drop screw with springring M4x12	1
72.60.08	**Frame B&W with heating container, assy**	1
90.42.00	Measuring cup	1
92.01.00	Cover	1
92.01.10	Level controller	1
92.02.00	**Milk container, assembly**	**1**
92.02.10	Milk container	1
92.02.20	Handle	1
91.30.00	**Tube suction F2/CTM, assembly**	**1**
10.09.10	O-ring ø5x1.5	1
71.21.02	Security clip	1
90.15.21	Connection angle	1
91.30.10	Tube ø5/8x90	1
91.31.00	Outlet tube F2/CTM, assembly	1
10.09.10	O-ring ø5x1.5	2
71.21.02	Securing-clip	2
71.40.69	Tie-wrap 85/22	2
90.15.21	Connection angle	1
91.31.10	Silicon tube ø4/8x295mm	1
91.39.00	**Milk pump with motor, assembly**	**1**
71.51.91	Socket head cap screw M3x6	3
91.39.10	Magnet motor	1
91.39.20	Milk pump	1
91.39.30	Magnet pump connectors	2
91.42.00	**Mounting set CTM for magnet pump**	**1**
71.40.15	Rubber mounting bush M5	4
71.50.16		4

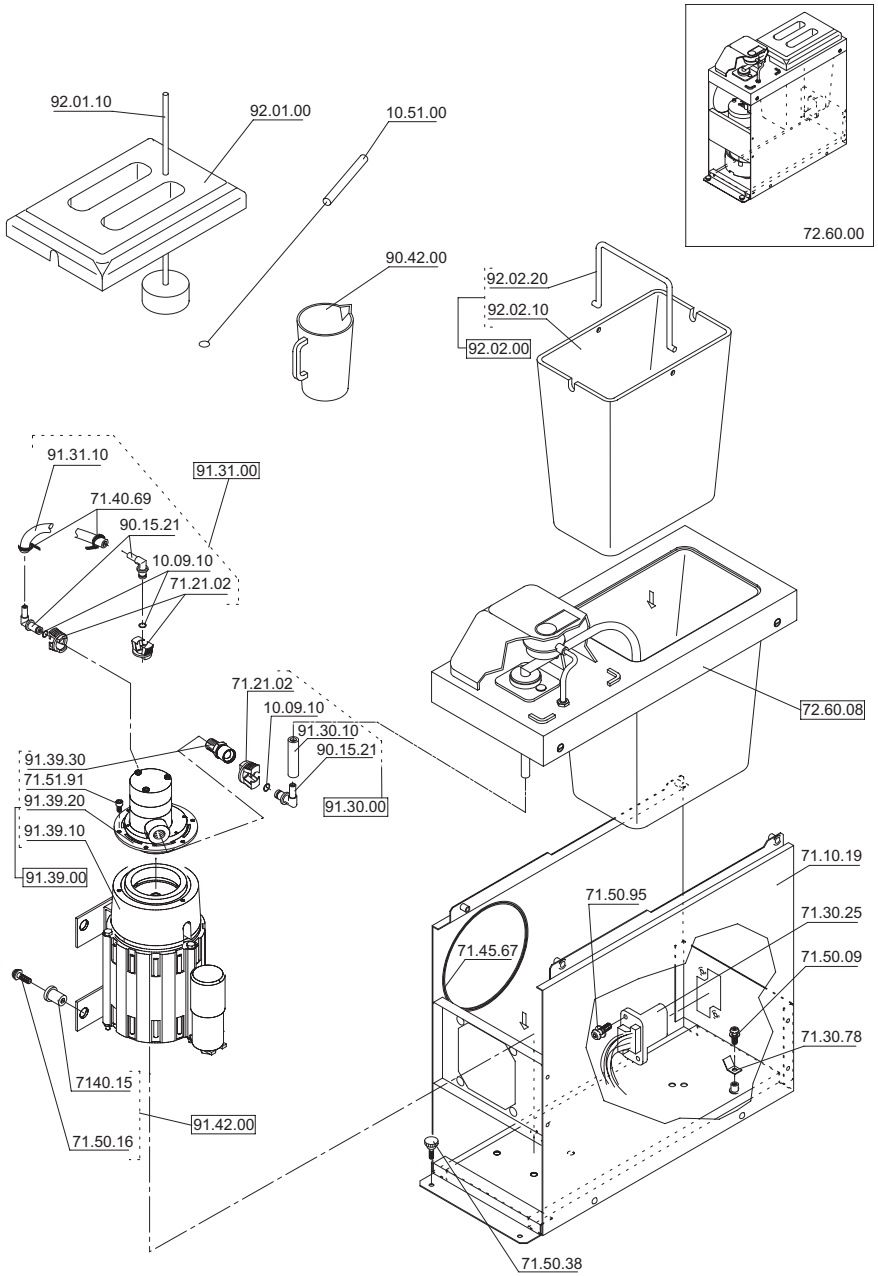

Part No	Description	Quantity
72.80.15	**Foamer module, assembly**	**1**
10.51.00	Cleaning brush	1
71.10.19	Casing foamer module	1
71.30.25	Wiring harness foamer module	1
71.30.78	Faston 45°	1
71.50.09	Cheese head cap screw M4x12	1
71.50.38	Knurled screw M4x10	2
71.50.95	Tallow-drop screw with springring M4x12	2
72.80.14	**Frame B&W with heating container, assembly**	**1**
72.60.12	**Foamer pump and base, assembly**	**1**
90.42.00	Mesuring cup	1
92.01.00	Cover	1
92.01.10	Level controller	1
92.02.00	**Milk container, assembly**	**1**
92.02.10	Milk container	1
92.02.20		1

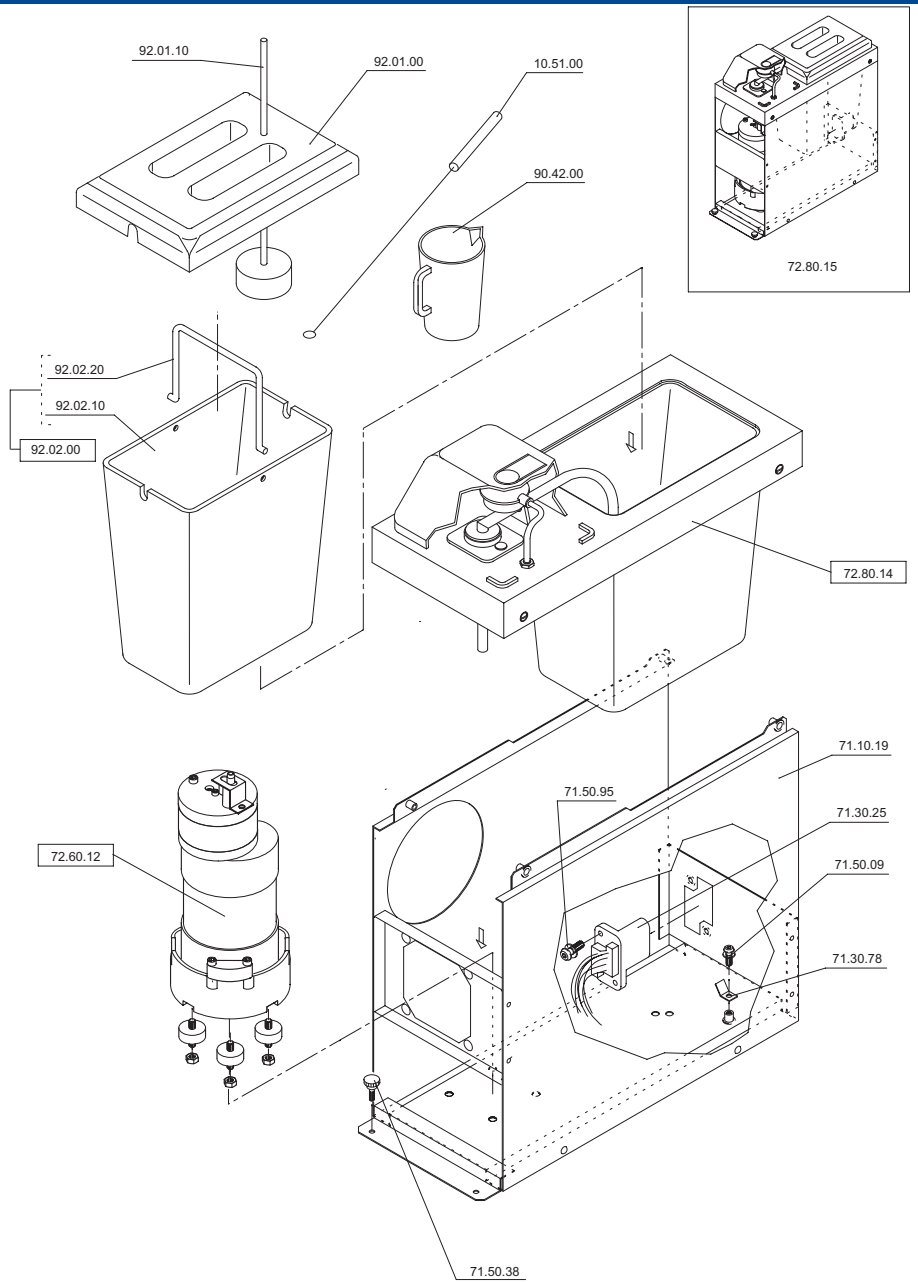

Part No	Description	Quantity
72.60.12	**Foamer pump and base, assembly**	**1**
72.60.04	**Motor with pump B&W, assembly**	**1**
50.19.00	**Motor 230V/50Hz, assembly**	**1**
05.05.12	Socked head cap screw M5x12	3
20.19.15	V-seal	1
92.21.11	Motor 230V/S2	1
72.60.03	**Pump, assembly**	**1**
05.05.50	Socked head cap screw M5x50	2
10.19.30	Insulation washer	1
20.19.21	**Pump housing, assembly**	**1**
20.19.22	Shaft packing	1
20.19.30	Pump housing	1
20.19.23	O-ring 54x2	1
72.60.02	**Pump cover B&W, assembly**	**1**
05.05.11	Socket head cap screw M5x10	1
05.05.20	Socket head cap screw M5x20	2
71.60.02	Pump cover	1
90.21.26	Security support	1
90.21.27	Distributor	1
90.39.23	Spur wheels (pair)	1
90.35.00	**Motor holder, assembly**	**1**
04.06.00	Nut M6	3
05.05.25	Socket head cap screw M5x25	4
90.35.10	Bumper	3
90.35.20	Clip (pair)	1
90.35.30		1

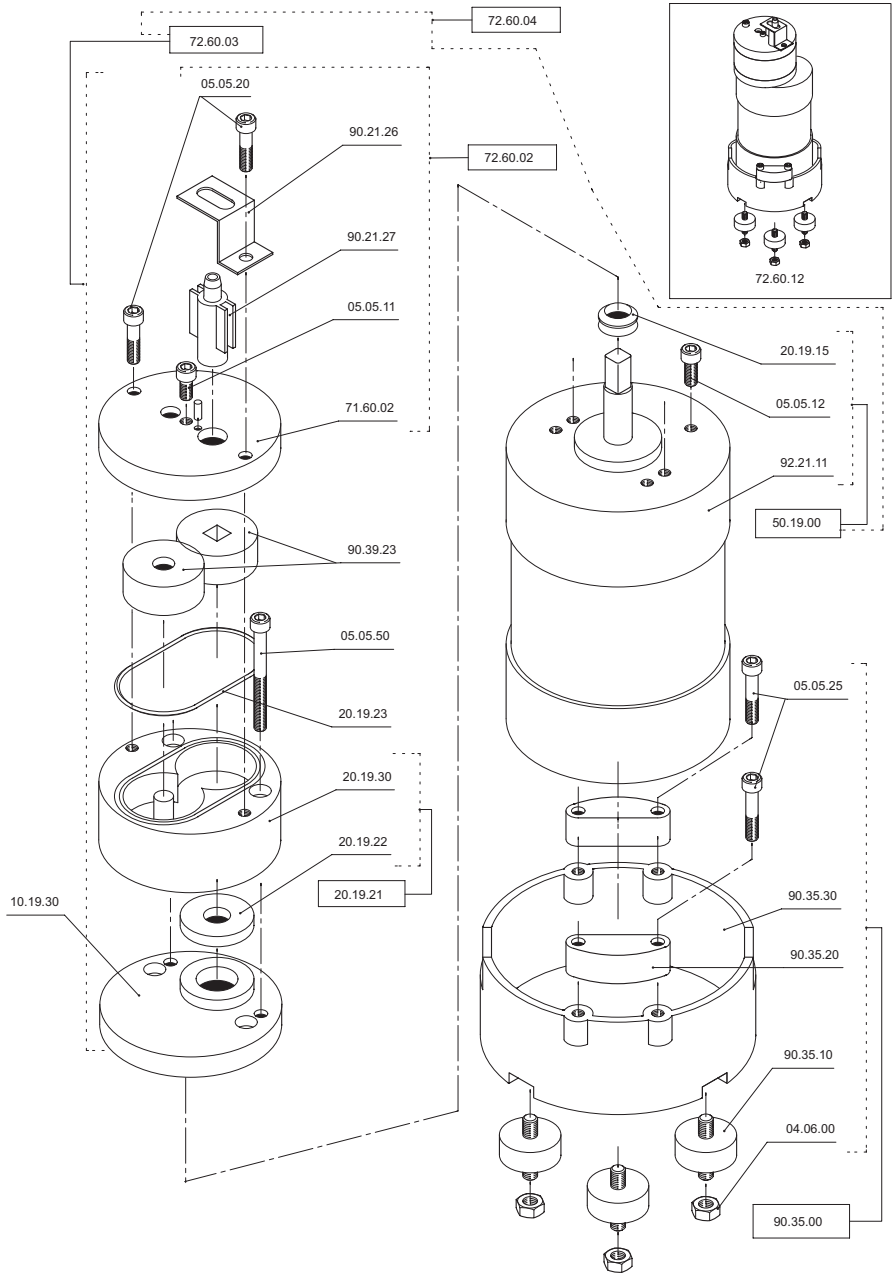

Part No	Description	Quantity
10.16.00	Main switch with lens, red	1
71.11.01	Front panel MF5	1
71.11.67	Connection, frame-front-long	1
71.11.68	Connection, frame-rear-long	1
71.30.21	Line cord coffee, Schuko	1
71.30.33	Terminal block 5P 40A	1
71.30.35	Terminal block 3P 16A	1
71.30.36	Deck support piece	13
71.31.03	Strain relief CT	1
71.31.50	Controlcable MF5-CT	1
71.32.42	Line cord UK 3x1.5x2m	1
71.33.42	Wiring harness MF5	1
71.34.40	Plug tongue 45°	1
71.34.41	Plug tongue 2x60°	1
71.40.02	Bolt M5x5	4
71.40.30	Quick snap	4
71.50.15	Oval head screw M4x8	2
71.50.38	Knurled screw M4x10	1
71.50.43	Hexagon head cap screw M5x10	6
71.50.49	Knurled nut M4	1
71.50.70	Security nut M5	4
71.60.22	Nut M4 MF5	1
71.60.23	Print protection backwall	1
71.60.24	Print protection front	1
72.10.30	**Rubber foot, assembly**	**4**
72.10.35	**Frame MF5**	**1**
72.12.14	**P.c.board FEG2/Milk, assembly**	**1**
72.60.09	**Heating basin MF5, assembly**	**1**
90.01.00	**Cover ass. (pair)**	**1**
90.01.10	Bolt	4
90.01.20	Circlips ø 3.2	8
90.01.30	Cover pair	1
90.38.00	Electrical filter NEFI 10	1
91.26.00	**Suction pipe MF5/MF10**	**1**
10.09.10	O-ring ø5x1.5	1
71.21.02	Security clip	1
90.15.21	Connection angle	1
91.26.10	Tube ø5/8x150mm	1
91.28.00	**Pressure pipe MF5/MF10 right, assembly**	**1**
10.09.10	O-ring ø5x1.5	2
71.21.02	Security clip	2
90.15.21	Connection angle	2
91.28.10	Silicon pipe ø4/8x260mm	1
91.29.00	**Pressure pipe MF5/MF10 left, assembly**	**1**
10.09.10	O-ring ø5x1.5	2
71.21.02	Security clip	2
71.40.69	Cable tie 85/22	2
90.15.21	Connection anglel	2
91.29.10	Silicon tube ø4/8x380mm	1
91.39.00	**Milk pump with motor, assembly**	**1**
71.51.91	Socket head cap screw M3x6	3
91.39.10	Magnet motor	1
91.39.20	Milk pump	1
91.39.30	Magnet pump connectors	2

Part No	Description	Quantity
91.40.00	**Motor support angle, assembly**	**1**
04.06.00	Nut M6	4
71.40.15	Rubber mounting bush M5	4
71.51.77	Hexagon head cap screw M5x20	4
90.35.10	Bumper	4
91.40.10	Motor support angle	1
95.02.00	Milk container 5l.	1
95.26.10	Power deck 5l.	1

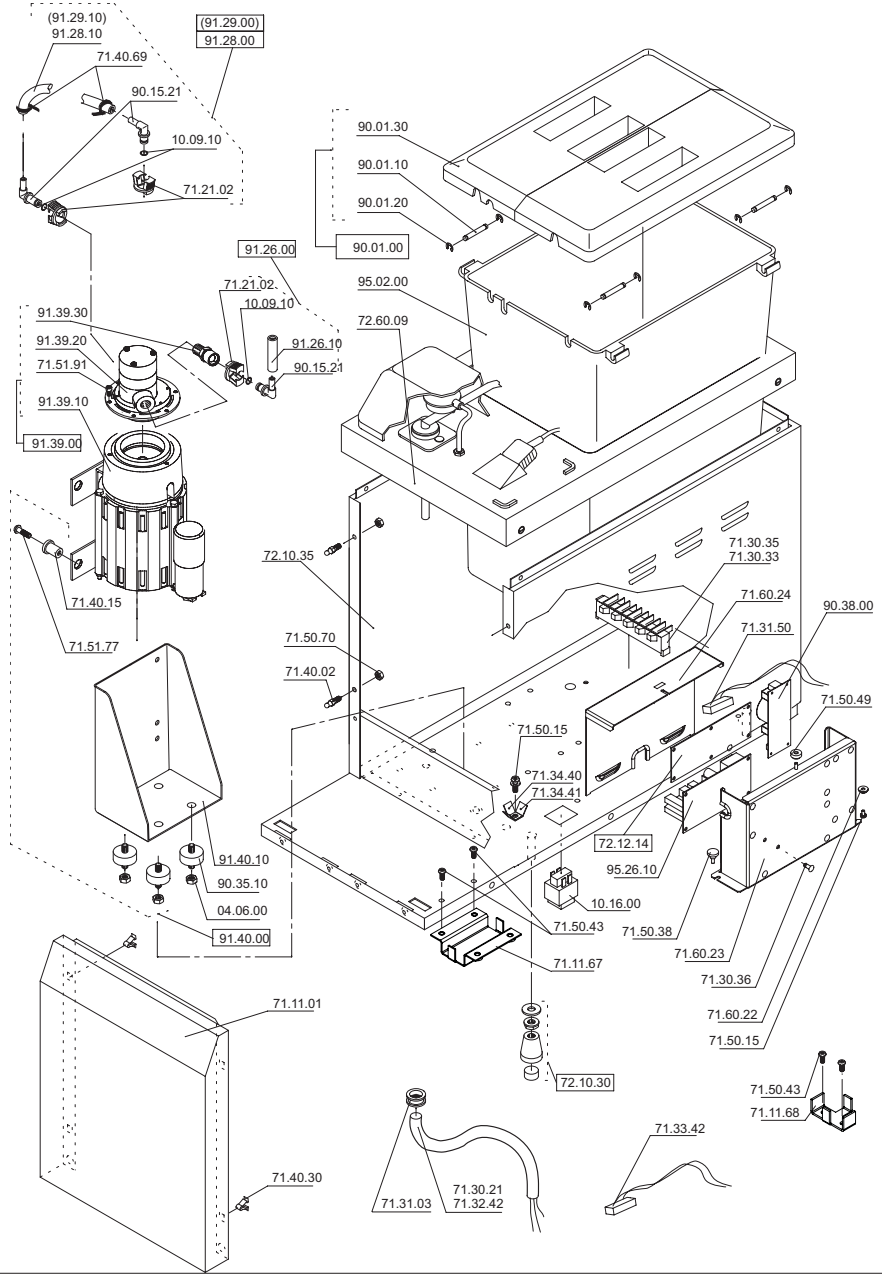

Part No	Description	Quantity
10.16.00	Main switch with lens, red	1
50.31.00	Foot	1
71.11.01	Front panel MF5	1
71.11.67	Connection, frame-front-long	1
71.11.68	Connection, frame-rear-long	1
71.30.20	Net filter print 16A	1
71.30.33	Terminal block 5P 40A	1
71.30.35	Terminal block 3P 16A	1
71.30.36	Deck support piece	13
71.31.03	Strain relief CT	1
71.31.50	Controlcable MF5-CT	1
71.33.44	Wiring harness MF10	1
71.33.47	mains cable AWG 12/3 without plug 2m	1
71.34.40	Plug tongue 45°	1
71.34.41	Plug tongue 2x60°	1
71.40.02	Bolt M5x5	4
71.40.30	Quick snap	4
71.50.15	Oval head screw M4x8	1
71.50.43	Hexagon head cap screw M5x10	6
71.50.70	Security nut M5	4
72.10.30	**Rubber foot, assembly**	**4**
72.10.35	**Frame MF5**	**1**
72.12.14	**P.c.board FEG2/Milk, assembly**	**1**
90.01.00	**Cover ass. (pair)**	**1**
90.01.10	Bolt	4
90.01.20	Circlips ø3.2	8
90.01.30	Cover pair	1
91.26.00	**Suction pipe MF5/MF10**	**1**
10.09.10	O-ring ø5x1.5	1
71.21.02	Security clip	1
90.15.21	Connection angle	1
91.26.10	Tube 5/8x150mm	1
91.28.00	**Pressure pipe MF5/MF10 right, assembly**	**1**
10.09.10	O-ring ø5x1.5	2
71.21.02	Security clip	2
90.15.21	Connection angle	2
91.28.10	Silicon pipe ø4/8x260mm	1
91.29.00	**Pressure pipe MF5/MF10 left, assembly**	**1**
10.09.10	O-ring ø5x1.5	2
71.21.02	Security clip	2
71.40.69	Cable tie 85/22	2
90.15.21	Connection angle	2
91.29.10	Silicon tube ø4/8x380mm	1
91.39.00	**Milk pump with motor, assembly**	**1**
71.51.91	Socket head cap screw M3x6	3
91.39.10	Magnet motor	1
91.39.20	Milk pump	1
91.39.30	Magnet pump connectors	2
91.40.00	**Motor support angle, assembly**	**1**
04.06.00	Nut M6	4
71.40.15	Rubber mounting bush M5	4
71.51.77	Hexagon head cap screw M5x20	4
90.35.10	Bumper	4
91.40.10	Motor support angle	1
99.02.00	Milk container 10l.	1
99.26.10	Power deck 5l	1

Part No	Description	Quantity
99.60.09	**Heating basin MF10, assembly**	**1**
99.70.00	Bowl	1
99.70.10	Support	1

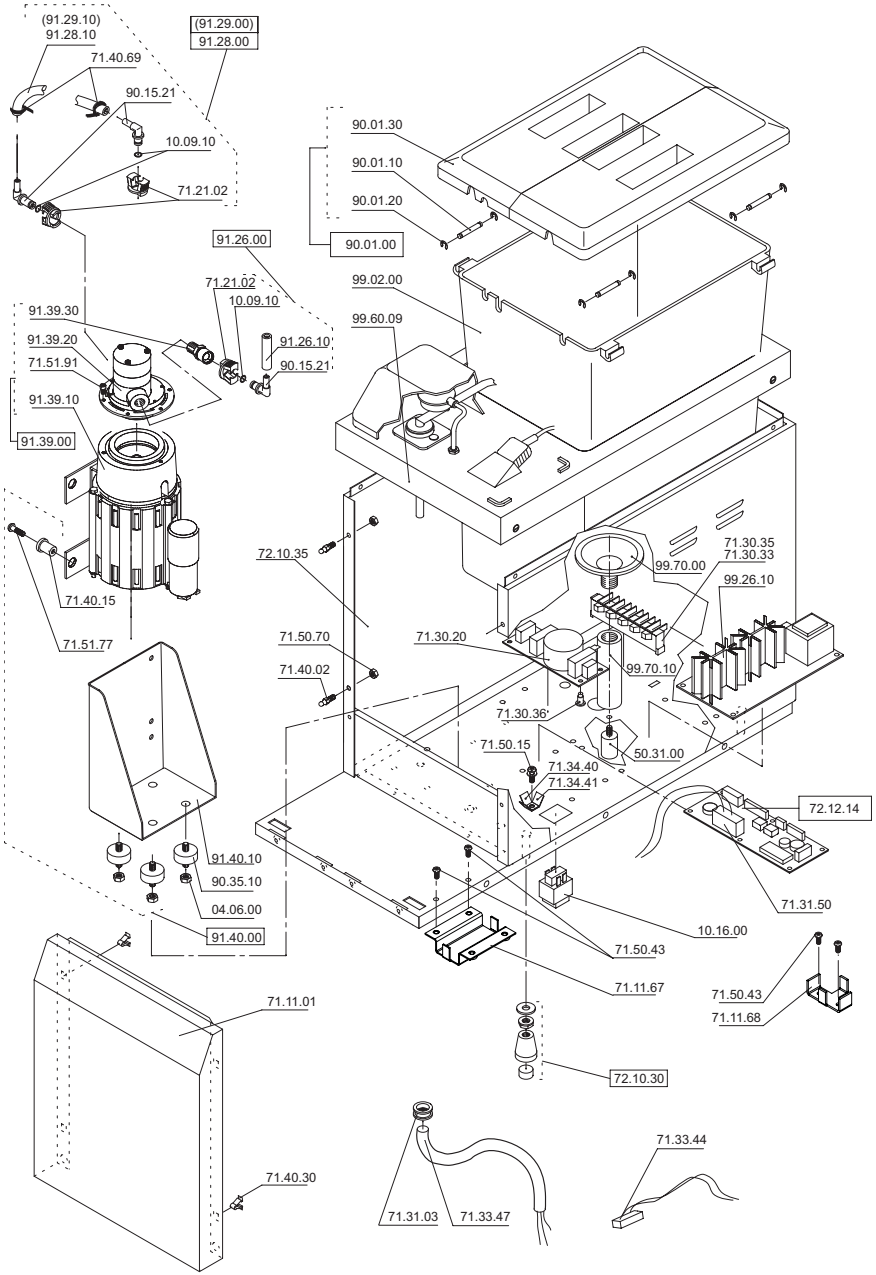

Part No	Description	Quantity
72.60.27	**MF5T module, assembly**	**1**
10.16.00	Main switch with lens, red	1
71.30.33	Terminal block 5P 40A	1
71.30.36	Deck support piece	20
71.30.51	Relay for tea-steam module	1
71.31.03	Strain relief CT	1
71.31.24	Line cord USA without connector	1
71.32.42	Line cord UK 3x1.5mmx2m	2
71.34.16	Controlcable CT-MF5T	1
71.34.40	Plug tongue 45°	1
71.34.41	Plug tongue 2x60°	1
71.45.93	Spacer for front panel	4
71.45.98	Pipe clamp	1
71.50.03	Countersunk screw M4x12	4
71.50.15	Oval head screw M4x8	1
71.60.26	Front panel MF5T	1
71.60.29	Deck support	1
72.10.30	**Rubber foot, assembly**	**4**
72.11.99	**P.c.board FEG2/tea, assembly**	**1**
72.12.14	**P.c.board FEG2/milk, assembly**	**1**
72.40.42	**Connection set CT-MF5T, assembly**	**1**
71.15.24	Short connection	1
71.15.25	Long connection	1
71.50.43	Hexagon head cap screw M5x10	6
72.60.09	**Heating basin MF5, assembly**	**1**
72.60.22	**Frame MF5T, assembly**	**1**
72.60.24	**Elbow for water connector, assembly**	**1**
71.22.03	Straight fitting undercounter 6-1/8''	1
71.22.16	Seal 1/8''	2
71.22.39	Reduction TS 1/4-1/8''	1
71.26.38	Insert 1/8''	1
71.28.25	Ellbow connection G1/4''	1
71.28.26	Reduction 1/4-1/8''	1
72.20.84	**Not return valve G1/8'', assembly**	**1**
72.60.25	**Boiler MF5T, assembly**	**1**
72.60.26	**Milk pump with bracket, assembly**	**1**
72.60.23	**Milk pump bracket, assembly**	**1**
04.06.00	Nut M6	4
71.60.27	Bracket	1
90.35.10	Bumper	4
91.39.00	**Milk pump with motor, assembly**	**1**
90.39.10	Magnet motor	1
90.39.20	Milk pump	1
72.60.28	**Pressure pipe MF5/MF10 right, assembly**	**1**
10.09.10	O-ring ø5x1.5	2
71.21.02	Securing clip	2
71.40.69	Tie-wrap 85/22	2
71.60.32	Tube ø4/8x1100mm	1
90.15.21	Connection angle	2
90.01.00	**Cover, assembly (pair)**	**1**
90.01.10	Bolt	4
90.01.20	Circlips ø3.2	8
90.38.00	Electrical filter NEFI 10A	1

Part No	Description	Quantity
91.26.00	**Suction pipe MF5/MF10**	**1**
10.09.10	O-ring ø5x1.5	1
71.21.02	Securing clip	1
90.15.21	Connection angle	1
91.26.10	Tube ø5/8x150mm	1
95.02.00	Milk container 5l.	1
95.26.10	Power deck 5l.	2

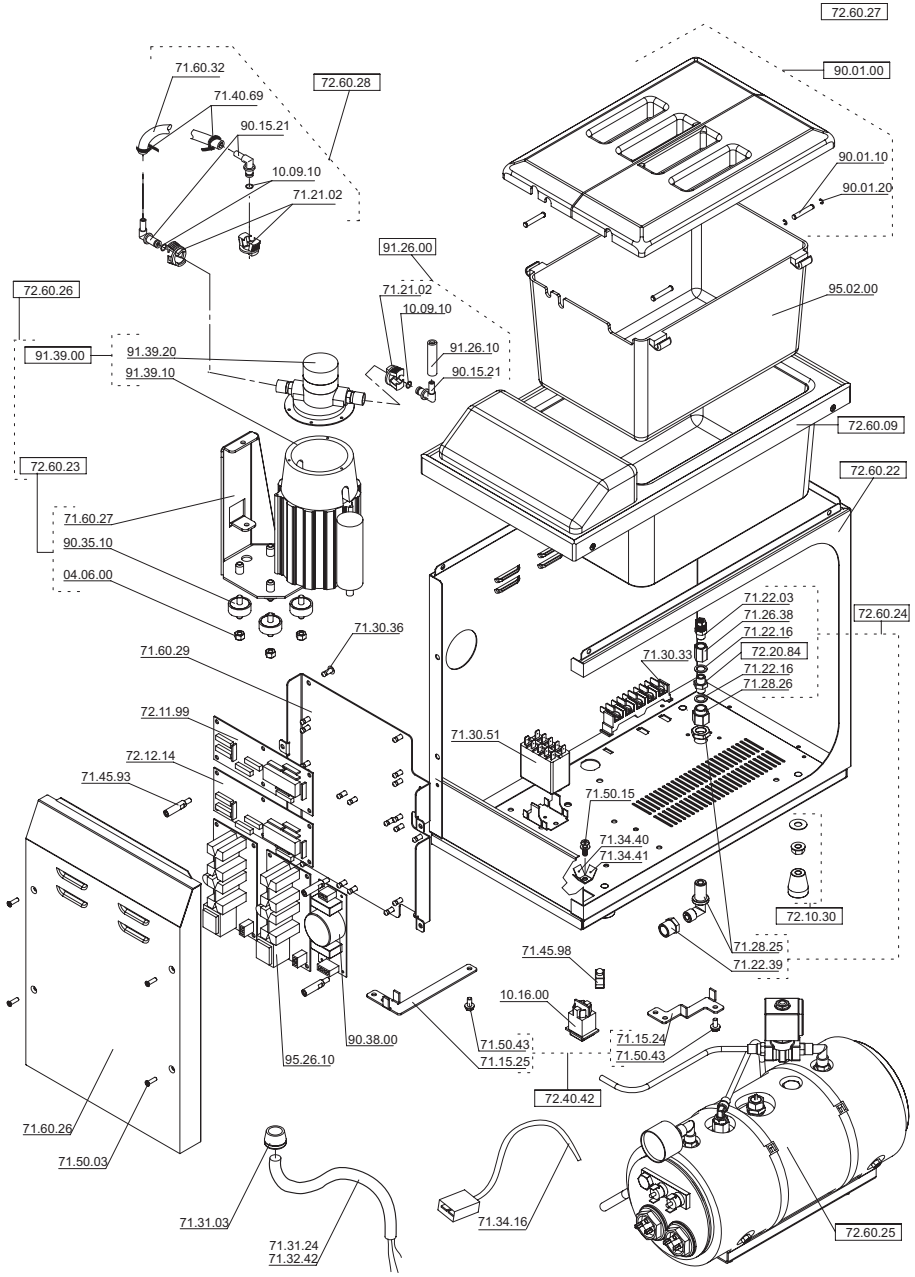

Part No	Description	Quantity
72.60.16	**Foamino easy, assembly**	**1**
10.51.00	Cleaning brush	1
71.12.23	Hoasing Foamino easy	1
71.31.69	Wiring hiter foamino easy	1
71.31.70	Wiring harness foamino easy	1
71.31.71	Wiring harness foamino-in easy	1
71.31.73	Wiring harness foamino easy	1
71.31.74	Wiring harness foamino-in easy	1
71.50.04	Cheese head screw M4x8	1
71.50.27	Washer M4	1
90.42.00	Measuring cup	1
92.01.00	Cover	1
92.01.10	Level control	1
72.60.17	**Pumpe foamino with support easy**	**1**
71.21.88	Tube ø4/8x230mm	1
71.31.55	Relay 25A	1
71.50.15	Oval head screw M4x8	2
94.16.20	Pumpe support plate	1
72.60.18	**Pumpe foamino easy, assembly**	**1**
71.21.63	Nut for pumpe foamino easy	2
71.22.74	Rubber mounting bush for vibrapump	4
71.60.17	Milk pump easy 24V	1
72.60.19	**Frame with heating container foamino easy**	**1**
92.02.00	**Milk container, assembly**	**1**
92.02.10	Milk container	1
92.02.20	Handle	1

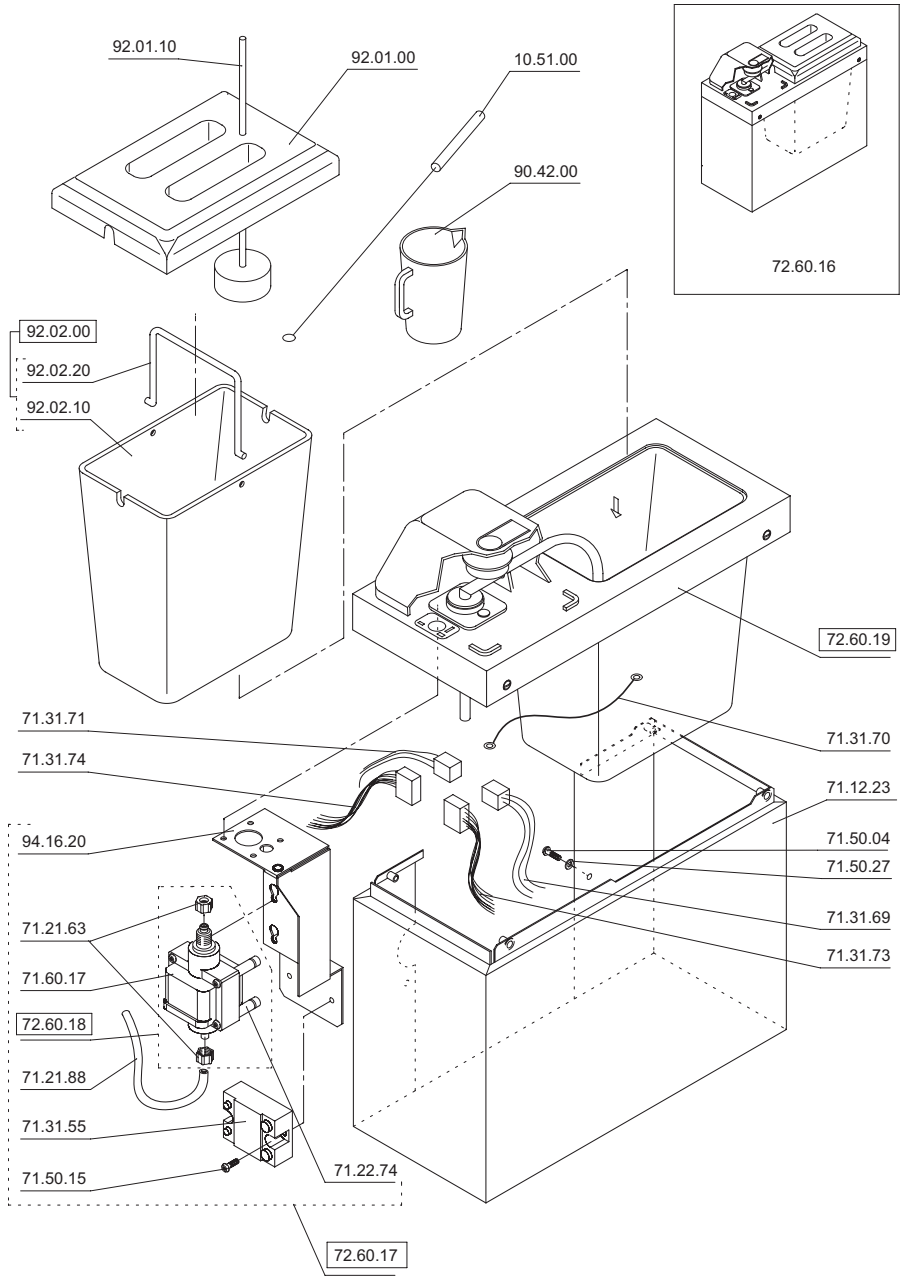

Part No	Description	Quantity
72.60.16	**Foamino easy, assembly**	**1**
10.51.00	Cleaning brush	1
71.12.23	Hoasing Foamino easy	1
71.21.88	Tube ø4/8x230mm	1
71.31.55	Relay 25A	1
71.31.69	Wiring hiter foamino easy	1
71.31.70	Wiring harness foamino easy	1
71.31.71	Wiring harness foamino-in easy	1
71.31.73	Wiring harness foamino easy	1
71.31.74	Wiring harness foamino-in easy	1
71.50.04	Cheese head screw M4x8	1
71.50.15	Oval head screw M4x8	2
71.50.27	Washer M4	1
90.42.00	Measuring cup	1
92.01.00	Cover	1
92.01.10	Level control	1
72.60.19	**Frame with heating container foamino easy**	**1**
72.60.30	**Pump foamino easy, assembly**	**1**
71.21.63	Nut for pump foamino easy	2
71.41.91	V-ring for pump holder	2
94.16.30	**Pump holder, assembly**	**1**
71.40.93	Rubber mounting bush M4	4
71.43.16	Mounting plate to pump	1
71.50.12	Oval head screw M4x16	4
94.16.20	Pump support plate	1
92.02.00	**Milk container, assembly**	**1**
92.02.10	Milk container	1
92.02.20	Handle	1

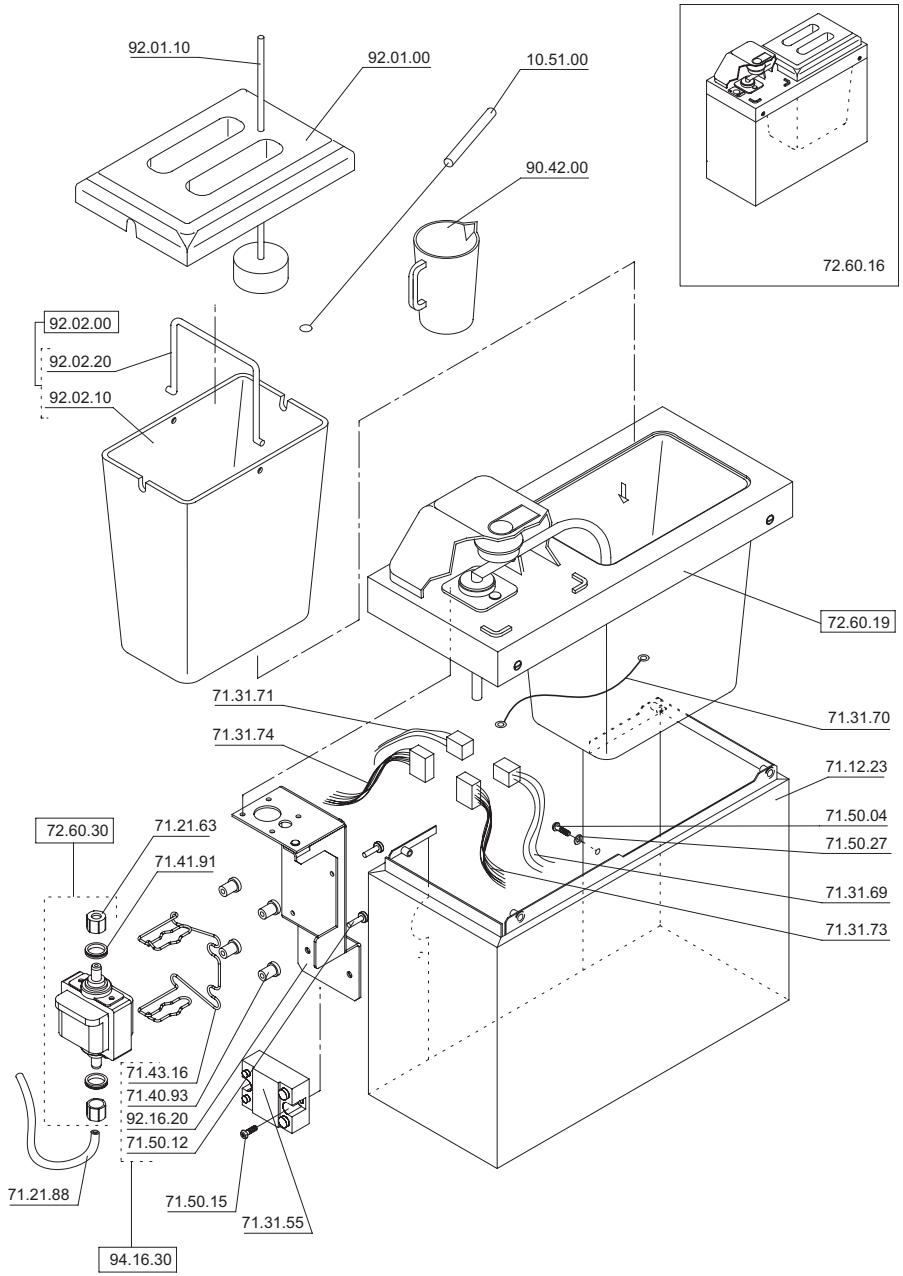

20. Heating container

			Page	Revision	
				List	Drawing
Heating container	Foamer 2L		20.1.1 / 20.1.2	REV.4	REV.4
Heating container	Foamer 2L	undercounter	20.2.1 / 20.2.2	REV.4	REV.4
Heating container	MF5 / MF5-T	5 L	20.3.1 / 20.3.2	REV.4	REV.4
Heating container	MF10	10 L	20.4.1 / 20.4.2	REV.4	REV.4
Heating container	Foamino	easyline	20.5.1 / 20.5.2	REV.4	REV.4

Part No	Description	Quantity
72.60.08	**Frame B&W with heating container, assembly**	**1**
08.04.16	Countersunk screw M4x16	4
50.23.40	**Valve with spring, assembly**	**1**
50.23.41	Spring	1
50.23.42	Valve red	1
50.23.50	**Valve screw, assembly**	**1**
20.20.31	O-ring ø11x1.5	1
50.23.51	Valve screw	1
72.60.07	**Frame B&W with heating container, assembly**	**1**
72.60.06	**Frame B&W and seal, assembly**	**1**
72.60.05	**Frame B&W, assembly**	**1**
71.60.01	Frame B&W	1
90.16.30	**Frame insert, assembly**	**1**
00.35.00	Washer ø3.5	2
07.35.12	Recessed head screw ø3.5x12	2
90.16.31	Frame insert	1
90.16.33	Plug ø8	1
92.16.11	Seal 2 l	1
92.16.30	**Heating container with heater CTM, assembly**	**1**
02.03.00	Security washer M3	3
05.05.11	Socket head cap screw M5x10	4
71.51.38	Cross recess screw M3x6	3
71.34.40	Faston 45°	1
90.16.24	Fuse with cable 4p. CTM	1
92.16.22	Heating container with heater	1
92.16.23	Temperature sensor	1
92.16.24	Insulation	1
90.19.10	**Solenoid valve, assembly**	**1**
04.06.05	Nut M6	1
90.19.20	Solenoid valve	1
92.03.20	Hood	1
92.08.00	**Milk air supply and suctioner, assembly**	**1**
90.08.30	Suctioner	1
92.08.20	Tube ø5/8x250	1
95.08.10	**Milk air supply II, assembly**	**1**
10.09.10	O-ring ø5x1.5	1
90.08.11	Milk air supply	1
95.08.13	**Air supply cover II, assembly**	**1**
90.08.12	O-ring ø26x2	1
95.08.14	Air supply cover II	1
72.60.01	**Air tube 0.45, assembly**	**1**
72.60.32	**Fitting ø0.45, assembly**	**1**
71.60.16	Fitting ø0.45	1
95.08.19	O-ring ø3x1.5	1
95.22.10	Tube ø2/4x55	1
71.40.73		1

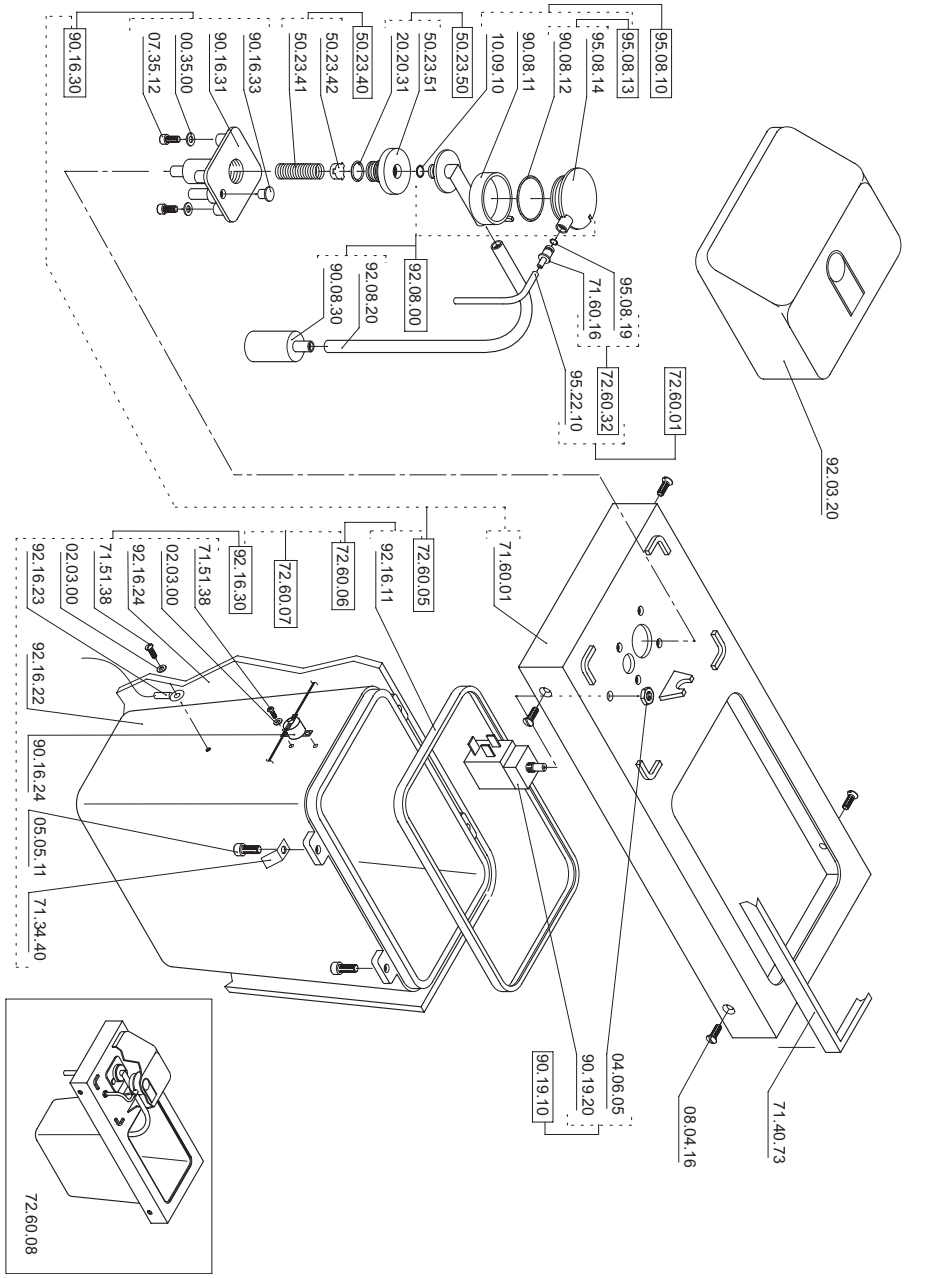

Part No	Description	Quantity
72.80.14	**Frame B&W wtih heating container, assembly**	**1**
08.04.16	Countersunk screw M4x16	4
10.09.10	O-ring ø5x1.5	2
20.20.30	O-ring ø8x2	1
50.23.40	**Valve with spring, assembly**	**1**
50.23.41	Spring	1
50.23.42	Valve reed	1
50.23.50	**Valve screw, assembly**	**1**
20.20.31	O-ring ø11x1.5	1
50.23.51	Valve screw	1
71.22.08	O-ring ø8x1.5	1
71.40.73	Seal for frame	1
71.50.80	U-tie-clip 250	1
71.60.04	Flang for restistor pipe undercounter	1
71.60.05	Resistor pipe undercounter	1
71.60.06	Closure socle	1
71.60.07	Closure restistor pipe	1
71.60.08	Connection for flask	1
72.60.07	**Frame with heating container**	**1**
72.60.06	**Frame B&W and seal, assembly**	**1**
72.60.05	**Frame B&W, assembly**	**1**
71.60.01	Frame B&W	1
90.16.30	**Frame insert, assembly**	**1**
00.35.00	Washer ø3.5	2
07.35.12	Recessed head screw ø3.5x12	2
90.16.31	Frame insert	1
90.16.33	Plug ø8	1
92.16.11	Seal 2l	1
92.16.30	**Heating container with heater CTM, assembly**	**1**
02.03.00	Security washer M3	3
05.05.11	Socket head cap screw M5x10	4
71.51.38	Cross recess screw M3x6	3
71.34.40	Faston 45°	1
90.16.24	Fuse with cable CTM 4-pol	1
92.16.22	Heating container with heater	1
92.16.23	Temperature sensor	1
92.16.24	Insulation	1
90.14.00	**Resistor long, assembly**	**1**
90.19.10	**Solenoid air valve, assembly**	**1**
04.06.05	Nut M6	1
90.19.20	Solenoid air valvel	1
90.20.00	Foam tube 115mm	1
90.36.20	O-ring ø17x1.5	1
91.30.10	Tube ø5/8x90	1
92.03.20	Hood	1
92.08.00	**Milk air supply and suctioner, assembly**	**1**
90.08.30	Suctioner	1
92.08.20	Tube ø5/8x250	1
95.08.10	**Milk air supply II, assembly**	**1**
10.09.10	O-ring ø5x1.5	1
90.08.11	Milk air supply	1
95.08.13	**Air supply cover II, assembly**	**1**
90.08.12	O-ring ø26x2	1
95.08.14	Air supply coverl	1
95.22.00	**Air tube, assembly**	**1**
95.08.30	**Fitting 0.6, assembly**	**1**
95.08.18	Fitting ø0.6	1
95.08.19	O-ring ø3x1.5	1
95.22.10		1

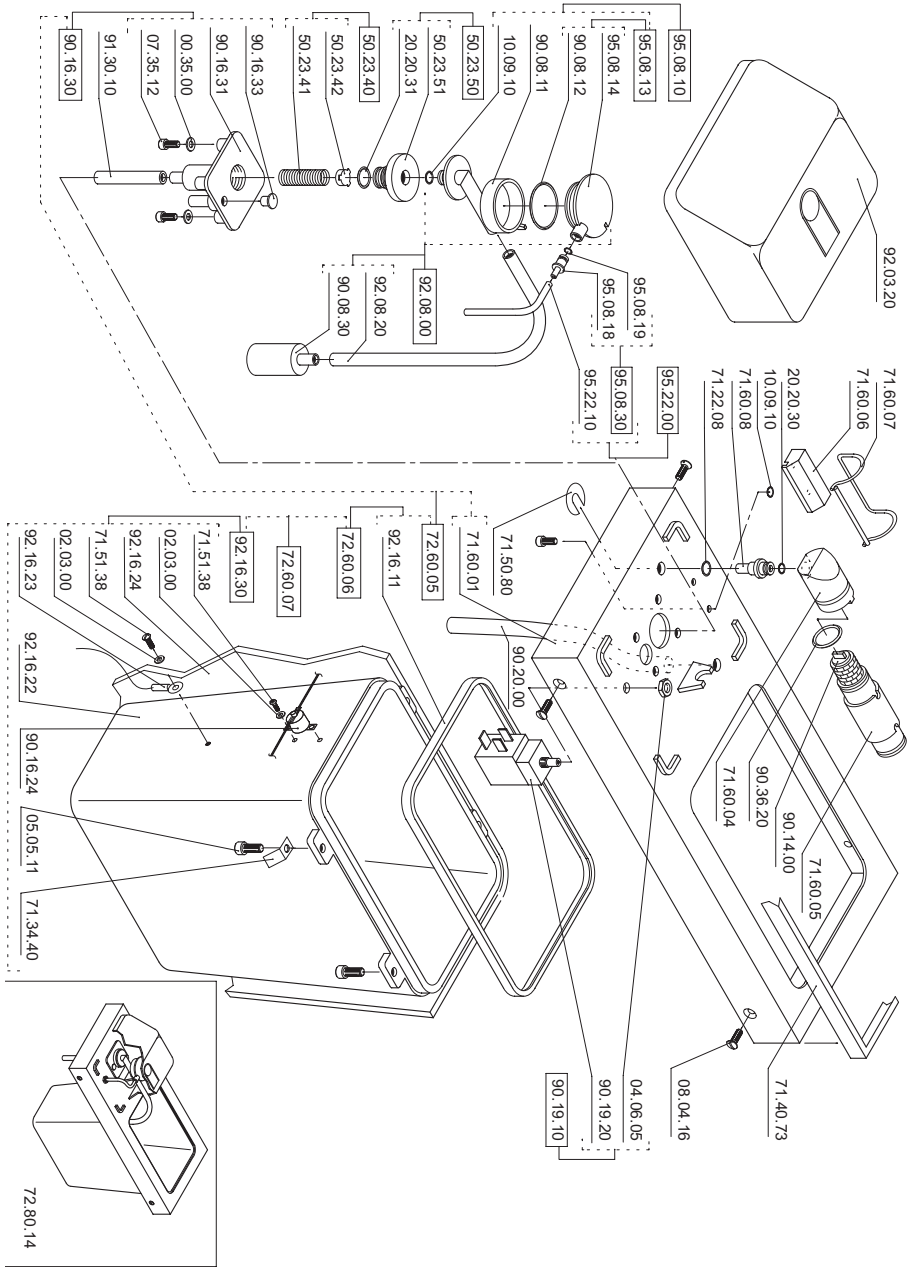

Part No	Description	Quantity
72.60.09	**Heating baisn MF5, assembly**	**1**
08.04.16	Countersunk screw M4x16	4
90.03.00	Air supply cover	1
91.30.10	Tube ø5/8x90	1
50.23.40	**Valve with spring, assembly**	**1**
50.23.41	Spring	1
50.23.42	Valve red	1
50.23.50	**Valve screw, assembly**	**1**
20.20.31	O-ring ø11x1.5	1
50.23.51	Valve screw	1
90.19.10	**Solenoid air valve, assembly**	**1**
04.06.05	Nut M6	1
90.19.20	Solenoid air valve	1
72.60.01	**Air-tube black, assembly**	**1**
72.60.32	**Fitting black 0.45, assembly**	**1**
71.60.16	Fitting black ø0.45	1
95.08.19	O-ring ø3x1.5	1
95.22.10	Tube ø2/4x55	1
95.08.01	**Milk-foamer-tube B&W, assembly**	**1**
90.08.30	Suctioner	1
95.08.20	Tube 180mm	1
95.08.10	**Milk air supply II, assembly**	**1**
10.09.10	O-ring ø5x1.5	1
90.08.11	Milk air supply	1
95.08.13	Air supply cover II, assembly	1
90.08.12	O-ring ø26x2	1
95.08.14	Air supply cover II	1
95.16.00	**Frame with heating basin, assembly**	**1**
95.16.20	**Heating basin with heater, assembly**	**1**
02.03.00	Security washer M3	2
05.05.14	Socket head cap screw M5x20	10
71.51.38	Cross recess screw M3x6	4
71.34.40	Faston 45°	1
95.16.22	Heating basin with heater F5	1
95.16.23	Temperature sensor	2
95.16.24	Insulation 5l	1
95.16.25	Fuse	1
95.16.26	**Reed contact**	**1**
90.18.10	**Frame wtih seal, assembly**	**1**
90.18.11	Seal 5l	1
95.16.12	**Frame 5l, assembly**	**1**
90.16.30	**Frame employment, assembly**	**1**
00.35.00	Washer ø3.5	4
07.35.12	Recessed head screw ø3.5x12	4
90.16.31	Frame insert	1
90.16.33	Plug ø8	1
95.16.13	Framework	1
95.16.27	Pin housing	2
95.16.28	Pin sleeve	2
95.60.00		1

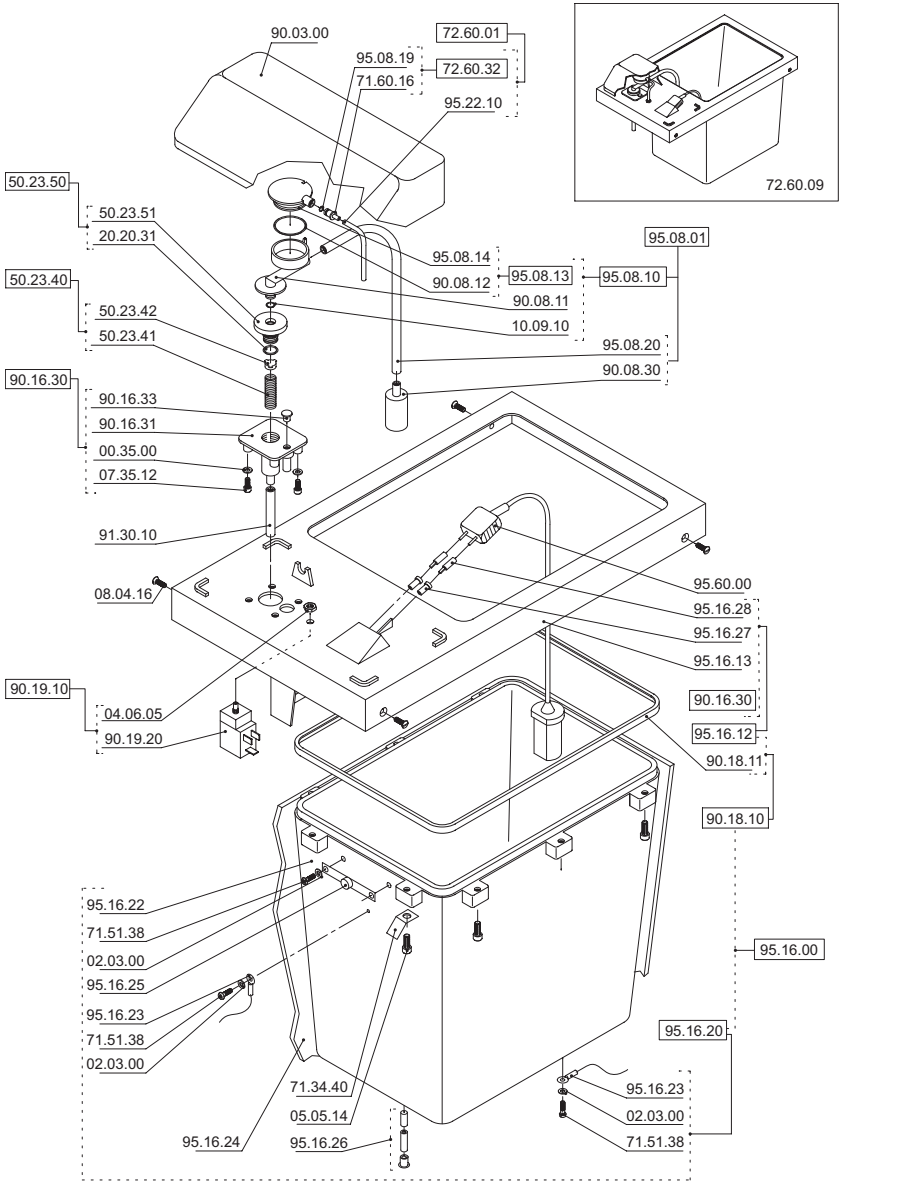

Heating container B&W	MF10 10L	Spare parts list

Part No	Description	Quantity
99.60.09	**Heating basin MF10, assembly**	**1**
08.04.16	Countersunk screw M4x16	4
90.03.00	Air supply cover	1
91.30.10	Tube ø5/8x90	1
50.23.40	**Valve with spring, assembly**	**1**
50.23.41	Spring	1
50.23.42	Valve red	1
50.23.50	**Valve screw, assembly**	**1**
20.20.31	O-ring ø11x1.5	1
50.23.51	Valve screw	1
90.19.10	**Solenoid air valve, assembly**	**1**
04.06.05	Nut M6	1
90.19.20	Solenoid air valve	1
72.60.01	**Air-tube, assembly**	**1**
72.60.32	**Fitting 0.45, assembly**	**1**
71.60.16	Fitting ø0.45	1
95.08.19	O-ring ø3x1.5	1
95.22.10	Tube ø2/4x55	1
99.08.01	**Milk-foamer-tube 10l, assembly**	**1**
90.08.30	Suctioner	1
99.08.20	Tube 310mm	1
95.08.10	**Milk air supply II, assembly**	**1**
10.09.10	O-ring ø5x1.5	1
90.08.11	Milk air supply	1
95.08.13	**Air supply cover II, assembly**	**1**
90.08.12	O-ring ø26x2	1
95.08.14	Air supply cover II	1
99.18.00	**Heating basin with frame**	**1**
90.18.10	**Frame with seal, assembly**	**1**
90.18.11	Seal 5l	1
95.16.12	**Frame 5l, assembly**	**1**
90.16.30	**Frame employment, assembly**	**1**
00.35.00	Washer ø3.5	4
07.35.12	Recessed head screw ø3.5x12	4
90.16.31	Frame insert	1
90.16.33	Plug ø8	1
95.16.13	Framework	1
95.16.27	Pin housing	2
95.16.28	Pin sleeve	2
99.18.20	**Heating basin 10l with heater, assembly**	**1**
02.03.00	Security washer M3	5
05.05.14	Socket head cap screw M5x20	10
71.51.38	Cross recess screw M3x6	4
71.34.40	Faston 45°	1
95.16.25	Fuse	1
95.16.26	**Reed contact**	**1**
99.16.23	Temperature sensor 10l	2
99.18.22	Heating basin with heater F10	1
99.18.24	Insulation 10l	1
99.60.00		1

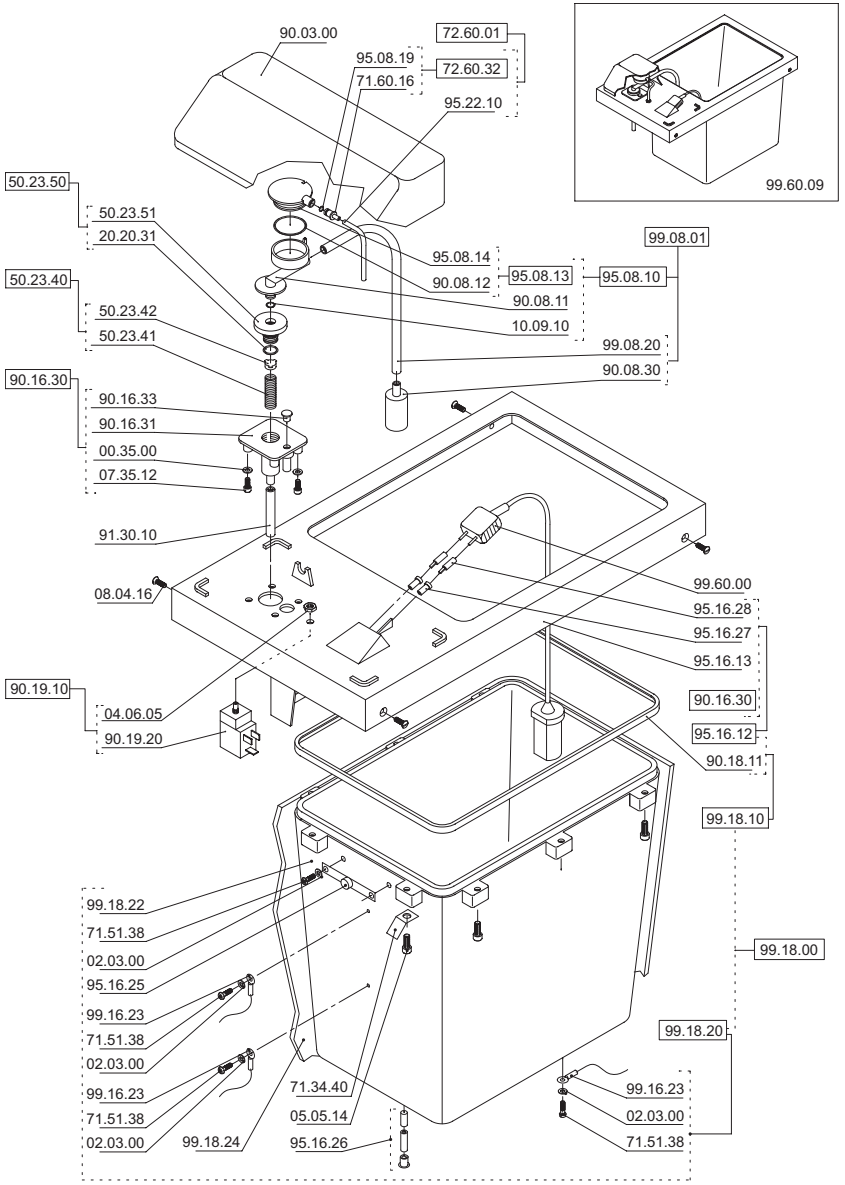

Part No	Description	Quantity
72.60.19	**Frame with heating container foamino, assembly**	**1**
08.04.16	Countersunk screw M4x16	4
50.23.50	**Valve screw, assembly**	**1**
20.20.31	O-ring ø11x1.5	1
50.23.51	Valve screw	1
72.60.07	**Frame B&W with heating container, assembly**	**1**
72.60.06	**Frame B&W and seal, assembly**	**1**
72.60.05	**Frame B&W, assembly**	**1**
71.60.01	Frame B&W	1
90.16.30	**Frame insert, assembly**	**1**
00.35.00	Washer ø3.5	2
07.35.12	Recessed head screw ø3.5x12	2
90.16.31	Frame insert	1
90.16.33	Plug ø8	1
92.16.11	Seal 2l	1
92.16.20	**Heating container with heater, assembly**	**1**
02.03.00	Security Washer M3	3
05.05.11	Socket head cap screw M5x10	4
71.31.70	Wiring harness Foamino easyline grounding	1
71.51.38	Cross recess screw M3x6	3
92.16.22	Heating container with heater	1
92.16.23	Temperature sensor	1
92.16.24	Insulation	1
92.16.26	Fuse with cable 6p foamino	1
72.60.15	**Air valve 24V foamino easy, assembly**	**1**
04.06.05	Nut M6	1
71.60.15	Air valve foamino easy	1
92.03.20	Hood	1
92.08.00	**Milk air supply and suctioner, assembly**	**1**
90.08.30	Suctioner	1
92.08.20	Tube ø5/7x250	1
95.08.10	**Milk air supply II, assembly**	**1**
10.09.10	O-ring ø5x1.5	1
90.08.11	Milk air supply	1
95.08.13	**Air supply cover II, assembly**	**1**
90.08.12	O-ring ø26x2	1
95.08.14	Air supply cover II	1
72.60.01	**Air tube, assembly**	**1**
72.60.32	**Fitting 0.45, assembly**	**1**
71.60.16	Fitting ø0.45	1
95.08.19	O-ring ø3x1.5	1
95.22.10		1

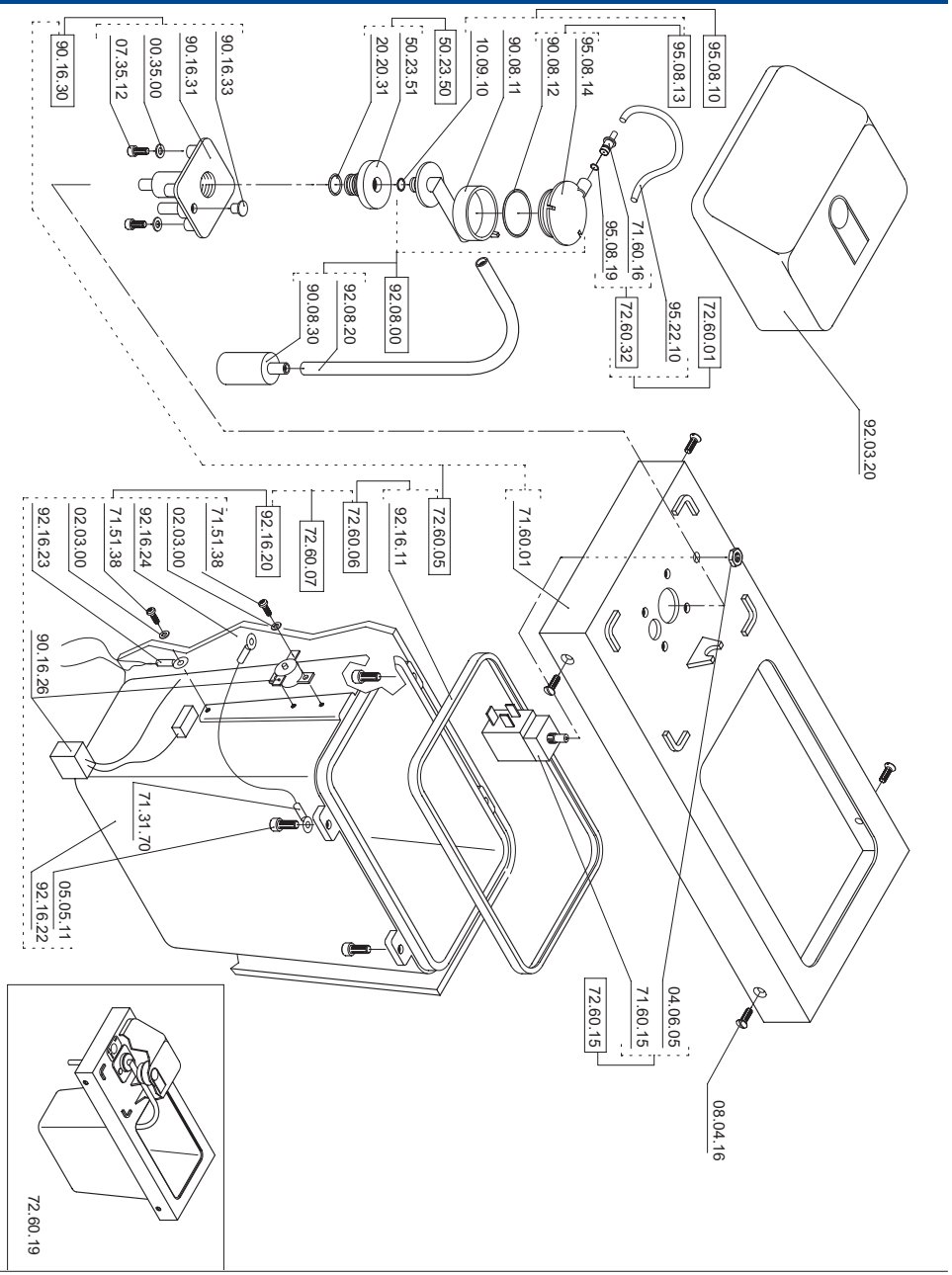

21. Brew module

		Page	Revision	
			List	Drawing
Brew module	CB	21.1.1 / 21.1.2	REV.4	REV.4
Receptacle	CB	21.2.1 / 21.2.2	REV.4	REV.4
Pump with motor	CB	21.3.1 / 21.3.2	REV.4	REV.4

Part No	Description	Quantity
72.45.09	Brew module, assembly	1
71.33.70	Wiring harness brew module	1
71.50.38	Knurled screw M4x10	2
71.50.95	Tallow-drop screw with springring M4x12	2
72.40.44	Pressure tube for mechanical, assembly	1
72.45.04	Drain tube, assembly	1
72.45.05	Pump tube, assembly	1
72.45.06	Pressure tube for valve, assembly	1
72.45.07	Pressure tube for drain, assembly	1
72.45.08	Slidegate valve with non return valve, assembly	1
72.45.12	Container, assembly	1
72.45.13	Brew unit housing	1
72.45.14	Pressure probe, assembly	1
91.39.00		1

OPTION

72.22.91		1
72.22.90		1
71.20.0312		1
71.20.39		1
72.22.92		1
71.20.0314		1
71.20.0317		1
72.22.93		1
71.20.0313		1
71.28.29		1

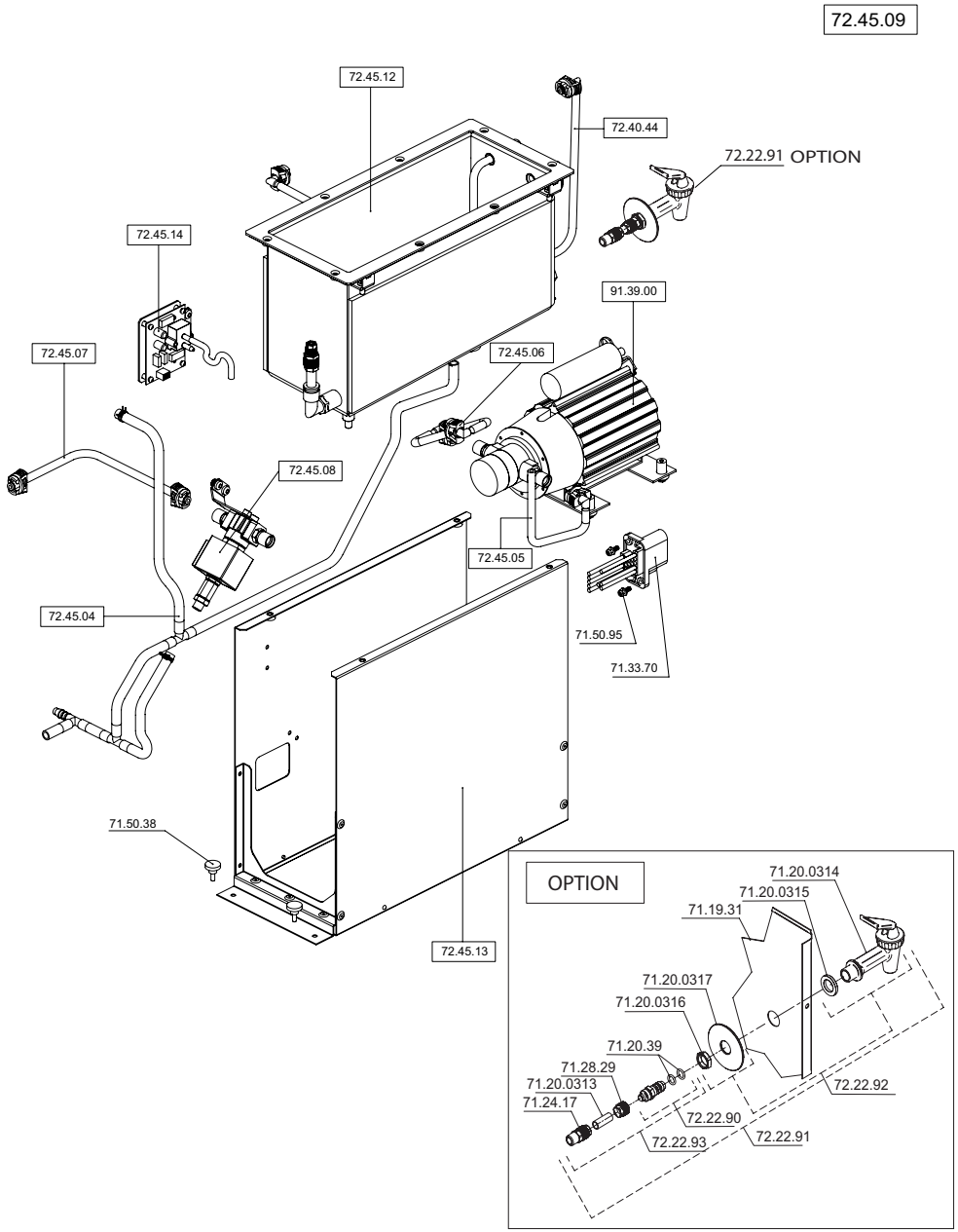

Part No	Description	Quantity
71.22.40	Ellbow connection 10-1/4“	**1**
71.24.25	Seal 1/4“	1
71.24.79	Locking pin G1/4“	1
71.25.07	O-ring 10.28x1.78	1
71.26.29	Connection container	1
71.26.32	Receptacle seal	1
71.26.35	Ellbow connection 10-1/4“	1
72.24.00	Connection pressure sensor	1
71.26.34	Tube ø4/6x120mm	1
71.26.36	Ellbow connection 10/8-6/4	1
71.26.37	Pipe ø7/10x40mm	1
71.28.37	Suction employment	1
71.33.71	Heating element 100W	1
71.40.35	Insulation	1
71.50.94	Oval head screw M5x12	4
72.21.62	Inlet pipe, assembly	**1**
10.09.10	O-ring ø5x1.5	1
72.40.44	Pressure tube for receptacle, assembly	**1**
10.09.10	O-ring ø5x1.5	2
71.21.02	Securing clip	2
71.27.52	Pressure tube ø8/4x850mm	1
90.15.21	Connection angle	2
72.45.02	Receptacle	**1**
72.45.04	Drain tube, assembly	**1**
71.21.56	T-connection	3
71.26.33	Tube ø7/10x580mm	1
71.26.42	Tube ø7/10x95mm	1
71.26.52	Tube ø7/10x165mm	1
71.26.53	Tube ø7/10x45mm	1
71.27.69	Tube ø7/10x50mm	1
71.27.70	Tube ø7/10x260mm	1
71.40.24	Pipe clamp	2
72.45.14	Pressure probe print, assembly	**1**
71.14.95	Support plate	1
71.30.36	Deck support piece	4
71.33.66	Pressure probe print	1
71.50.15	Oval head screw M4x8	2

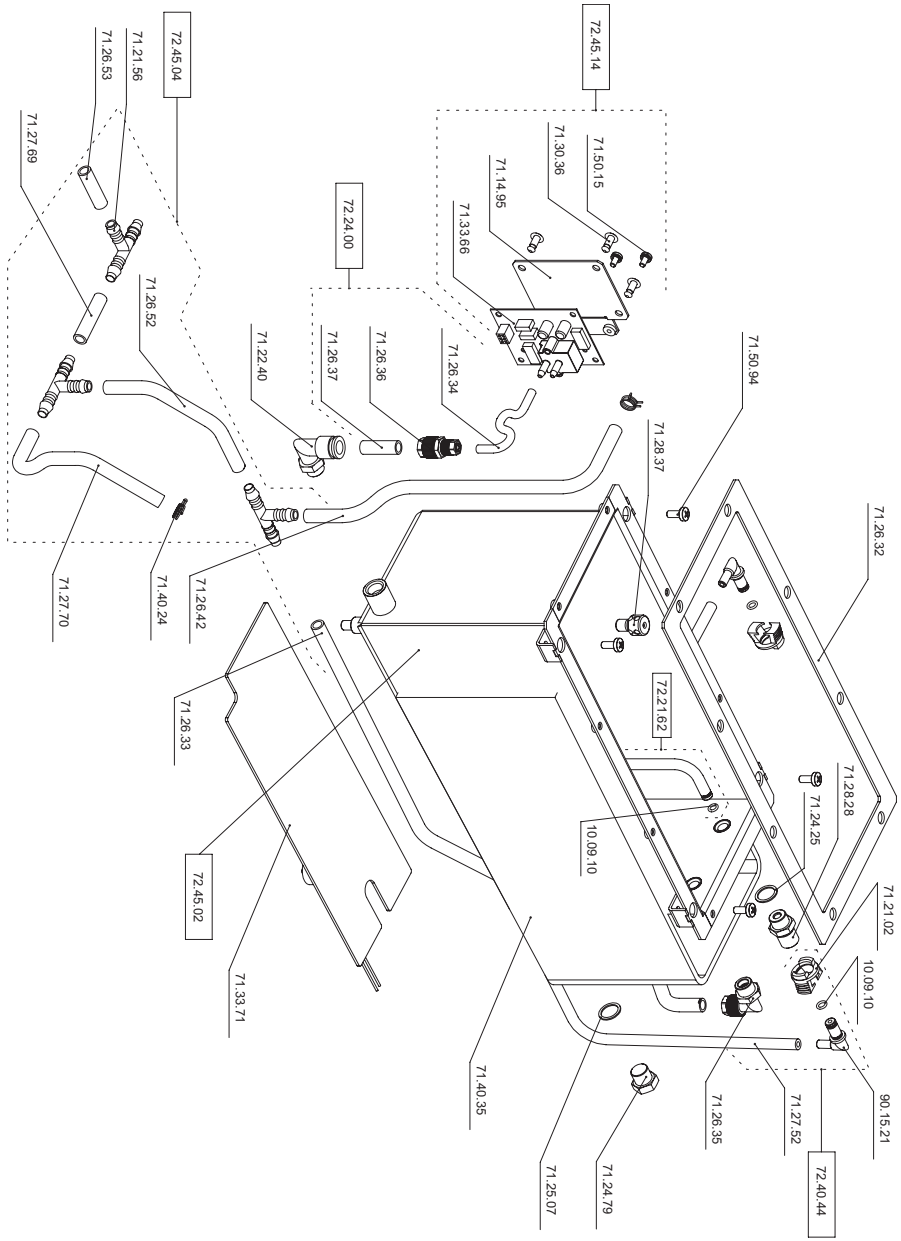

Part No	Description	Quantity
72.45.05	Pressure tube for pump, assembly	**1**
10.09.10	O-ring ø5x1.5	1
71.21.02	Security clip	1
71.26.41	Tube ø4/8x110mm	1
90.15.21	Connection angle	1
72.45.06	Pressure tube for valve, assembly	**1**
10.09.10	O-ring ø5x1.5	2
71.21.02	Security clip	2
71.26.39	Tube ø4/8x150mm	1
90.15.21	Connection angle	2
72.45.07	Pressure tube for drain, assembly	**1**
10.09.10	O-ring ø5x1.5	2
71.21.02	Security clip	2
71.26.40	Tube ø4/8x255mm	1
91.21.30	Connection nipple straight	2
72.45.08	Valve 3/2, assembly	**1**
71.14.94	Support plate	1
71.22.16	Seal 1/8“	2
71.26.38	Threaded bush 1/8“	1
71.50.15	Oval head screw M4x8	2
72.20.84	Non return valve G1/8“	1
71.50.91	Hexagon head cap screw M6x8	2
72.70.09	Steam valve ø4, assembly	**1**
71.22.88	Plugger for steam valve	1
71.22.91	Coil for valve	1
71.22.92	Plunger guide 3-way	1
71.22.93	Nut for valve	1
71.22.94	Base of steam valve	1
91.39.30	Magnet-pump connectors	2
91.39.00	Motor with pump, assembly	**1**
91.39.10	Magnet-motor	1
91.39.20	Magnet-pump	1
91.42.00	Mounting set CTM for magnet pump, assembly	**1**
71.40.15	Rubber mounting bush M5	4
71.51.77		4

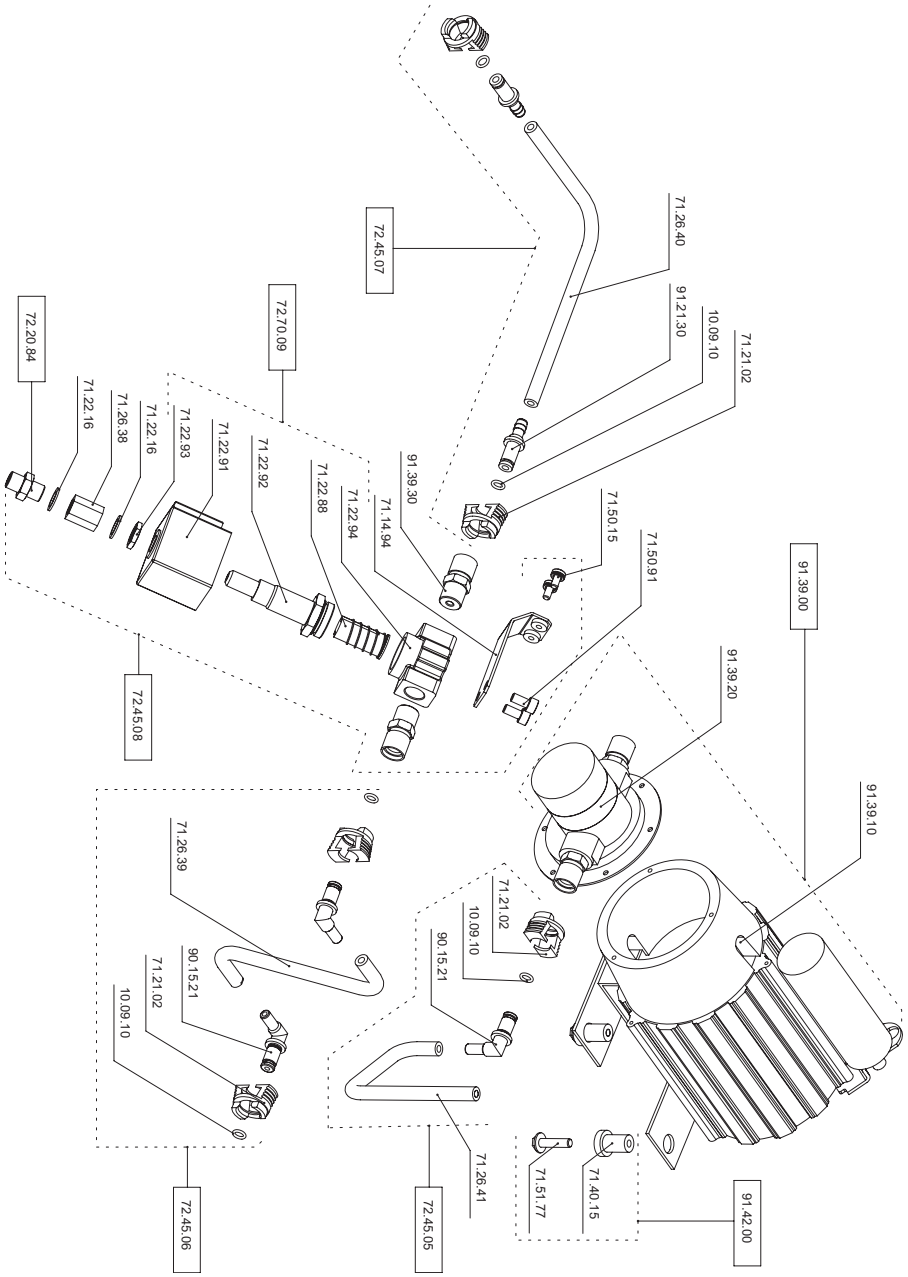

22. Various

		Page	Revision	
			List	Drawing
Drain system	easyline	22.1.1 / 22.1.2	REV.4	REV.4

Part No.	Description	Quantity
72.20.56	Drain system easy CTS/CTMS	1
71.21.62	Tube ø7/10x300mm	1
71.21.72	Tube ø7/10x380mm	1
71.21.76	Tube ø7/10x180mm	1
71.21.79	Tube ø7/10x150mm	2
71.22.59	Tube ø7/10x80mm	2
71.23.12	Tube ø7/10x240mm	1
71.23.33	Y-connector	1
71.40.24	Pipe clamp	4
71.21.56		1

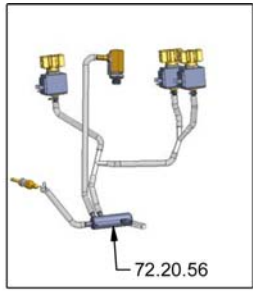

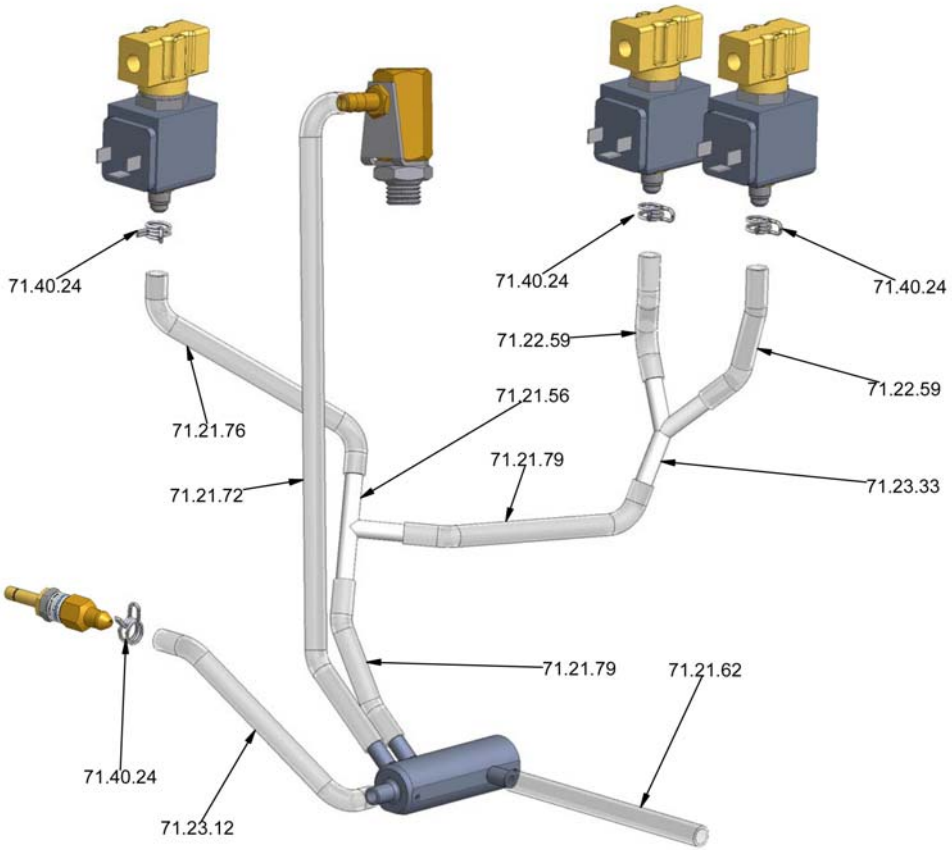

23. Choko

		Page	Revision	
			List	Drawing
Choko	Overview	23.1.1 / 23.1.2	REV.4	REV.4
Choko	Chassis	23.2.1 / 23.2.2	REV.4	REV.4

Part No	Description	Quantity
01.10.78	Gear motor 112 Rpm	1
01.13.00	Main switch	1
01.13.20	Outlet for mix chamber	1
01.13.30	Flange (Serv-O-matic)	1
01.13.31	Flange (Mix motor)	1
01.13.32	O-ring for Serv-O-matic	1
01.13.34	Mounting bushing for flange	1
01.13.40	PT truss head screw ø4x18	2
01.13.50	Cover for mix chamber	1
01.13.77	Mix chamber	1
01.13.81	Seal for mix chamber	1
01.13.85	Quirl	1
01.14.80	Mixing motor	1
01.15.50	Dosage valve 230V	1
01.16.23	Screw conveyor clutch	1
01.16.25	Product container	1
01.16.26	Screw conveyor	1
01.16.27	Mixer produkt cntainer	1
01.16.30	Oval head screw M5x20	1
01.16.37	Flange srew conveyor outlet, assembly	1
01.16.38	Flange srew conveyor drive, assembly	1
01.16.40	PT truss head screw ø3.5x10	4
01.16.50	Cover for product container	1
01.16.80	Output bow	1
01.17.75	Inlet valve 1/2''	1
01.18.02	Support level probe (short)	1
01.18.03	Level probe (short)	1
01.18.04	Level probe (long)	1
01.18.25	Plug	1
01.19.00	Temperature sensor	1
01.20.05	Powerboard	1
01.20.27	Print housing	1
01.20.51	Keyboard print	1
01.20.81	Counters	1
01.21.00	Thermostat switch	1
01.21.25	Water pipe ø1/2''-3/8''	1
01.21.27	Water pipe ø1/2''-3/4''	1
01.22.00	Plug	1
01.22.10	Security switch	1
01.22.11	Oval head screw M4x35	2
01.22.20	Wiring harness	1
01.81.16	Heater 1600 W	1
01.81.20	Nut M10	2
01.81.30	Washer M10	2
01.82.00	T-connection ø10	1
01.82.04	Silicon tube ø4/7x150	1
01.82.06	Silicon tube ø7/10x200	1
01.82.07	Silicon tube ø7/10x340	1
01.82.08	Silicon tube ø7/10x110	1
01.82.10	Silicon tube ø7/10x920	1
01.85.65	Boiler	1
01.85.70	Boiler cover	1
01.85.80	Boiler seal	1
01.93.22	Oval head self-tapping screw phillips ø2.9x25	4
01.94.08	Oval head screw M4x8	6
01.94.10	Countersunk screw M5x8	2

Part No	Description	Quantity
01.95.02	Spring ring B5	1
01.95.12	Hex socked head cap screw M5x12	1
01.99.99	Srewdriver Lilliput	1
02.04.00	Lockwasher M4	2
04.03.00	Nut M3	5
04.04.00	Nut M4	1
04.05.00	Nut M5	1
55.70.03	Recessed pan head screw phillips M4x25	4
71.45.00	Cover for keyboard	1
71.45.03	Front body panel	1
71.52.86	Distance pin M3	4

Additional version V2

Part No	Description	Quantity
01.21.10	Reset switch 105°C	2
01.21.11	Flange (Reset switch)	1
04.03.00	Nut M3	3

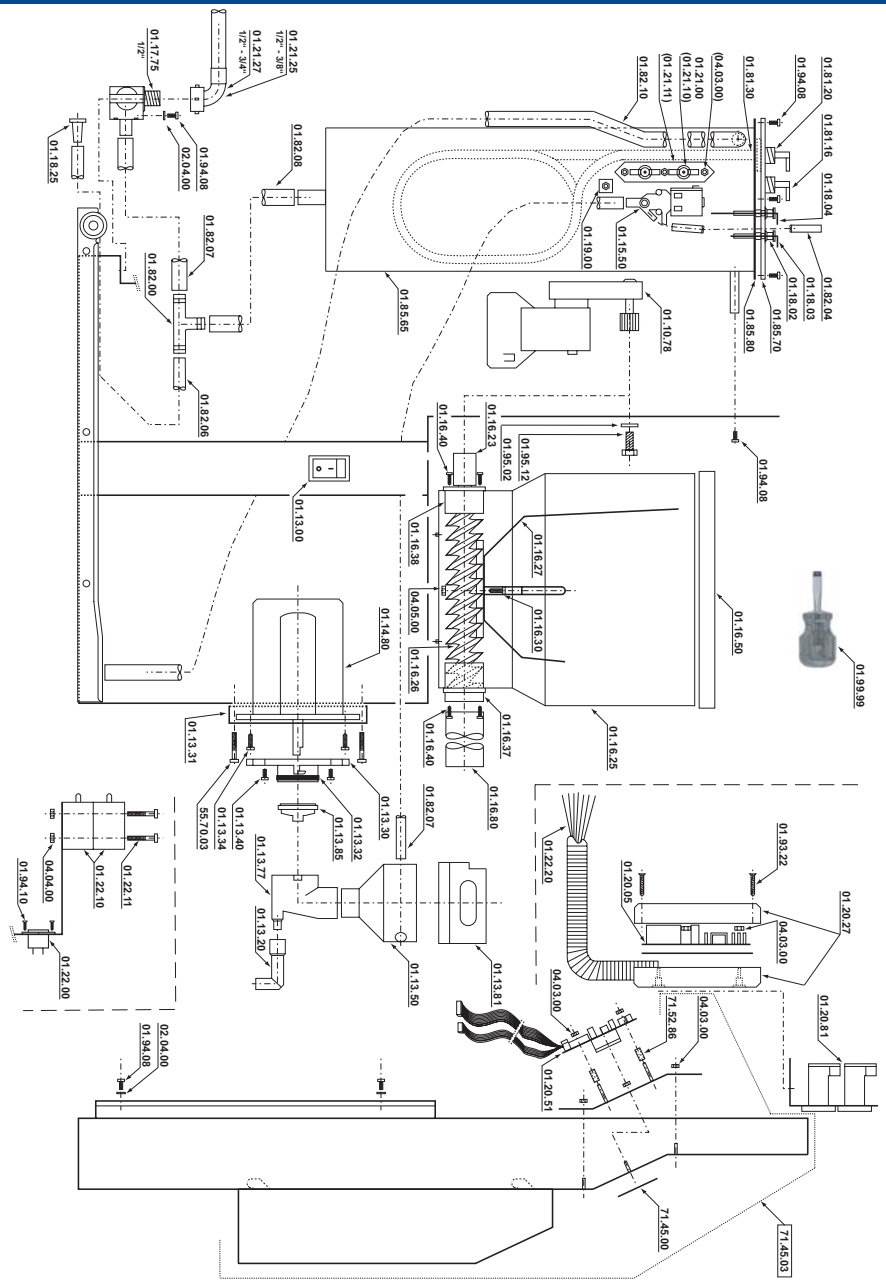

Part No	Description	Quantity
72.45.00	**Chassis Choko dispencer, assembly**	1
01.90.00	Guide rail track	2
71.10.92	Drainage tray grill MF/TS/CH	1
71.10.97	Backwall TS/CH	1
71.10.99	Cup support TS, top side	1
71.20.58	O-Ring 14x1.78	1
71.40.02	Bolt M5x5	4
71.40.30	Quick snap	4
71.40.60	Lock	1
71.40.71	Pipe 2.5m	1
71.40.89	Cup-basket	1
71.40.90	Key-lock	1
71.45.01	Socket D6.7	1
71.45.02	Socket D17.1	1
71.45.03	Front panel Choko dispenser	1
71.45.09	Cap Ø 30	1
71.45.10	Locking bar for choko dispenser	1
71.50.05	Countersunk screw M4x8	4
71.50.95	Tallow-drop screw with springring M4x12	4
72.10.16	**Drain connection, assembly**	**1**
71.20.44	Drain connection	1
71.40.61	Washer ø 16x5	2
71.50.42	Tallow top screw ø 4x16	2
72.10.30	**Rubber foot, assembly**	4
72.10.37	**Drainage tray MF/TS/CH**	1

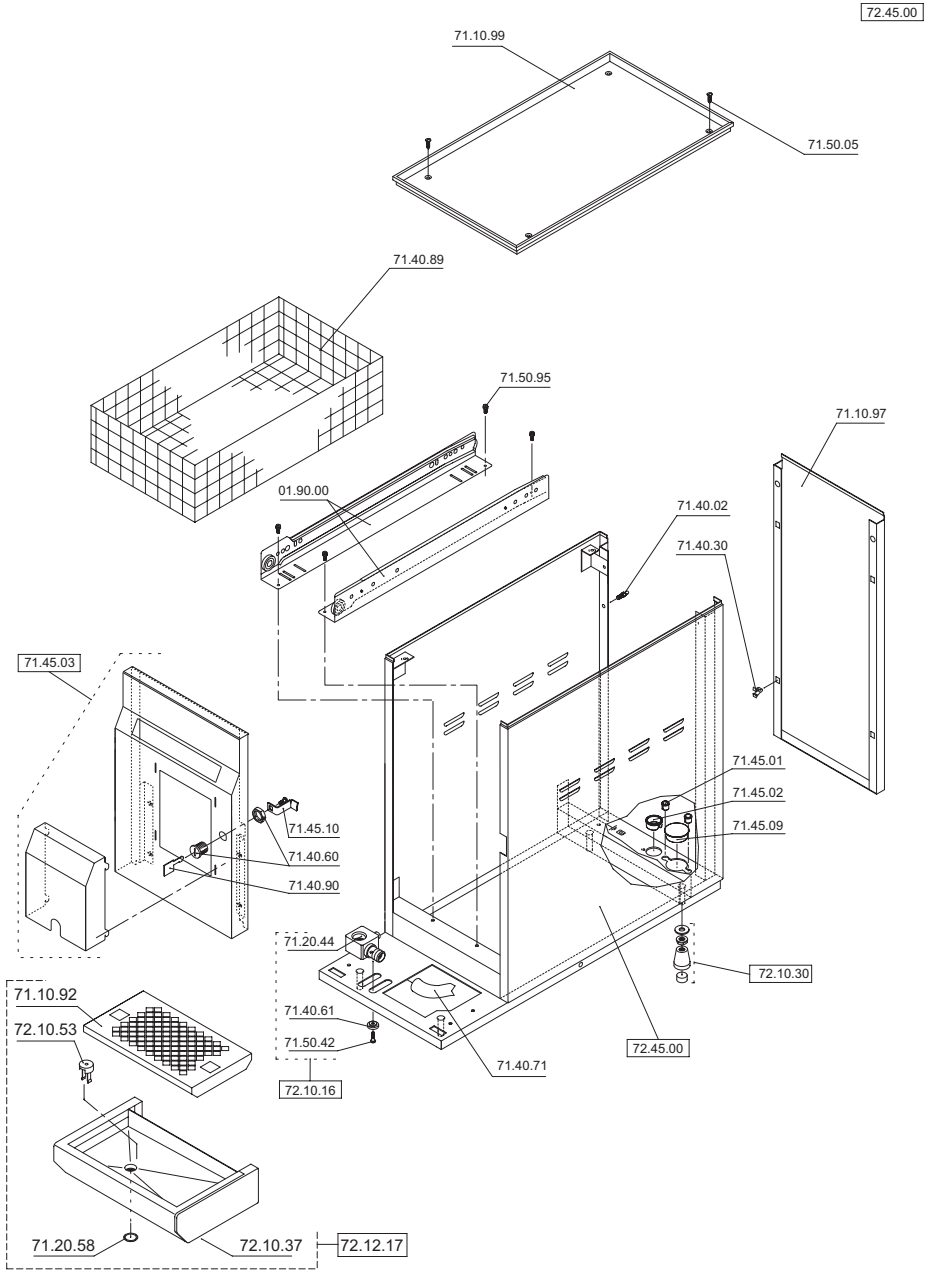

24. Accessories

	Page	Revision	
		List	Drawing
Steamwand adjustable	24.1.1 / 24.1.2	REV.4	REV.4
Milk replenishment unit	24.2.1 / 24.2.2	REV.4	REV.4

Part No.	Description	Quantity
72.70.50	**Steam pipe adjustable**	**1**
72.70.57	**Steam regulator, assembly**	**1**
71.20.39	O-ring ø9x2	2
71.24.48	Elbow fitting	1
71.25.11	Rotary knob	1
71.25.14	Regulator shaft	1
71.50.33	Circlips ø8	1
72.70.58	**Tube with ball, assembly**	1
71.21.06	Steam outlet	1
71.23.76	Steam pipe, long	1
71.22.32	Nut for holder	1
71.22.33	Holder for steam pipe TS	1
71.33.14	Grounding ring steam pipe	1

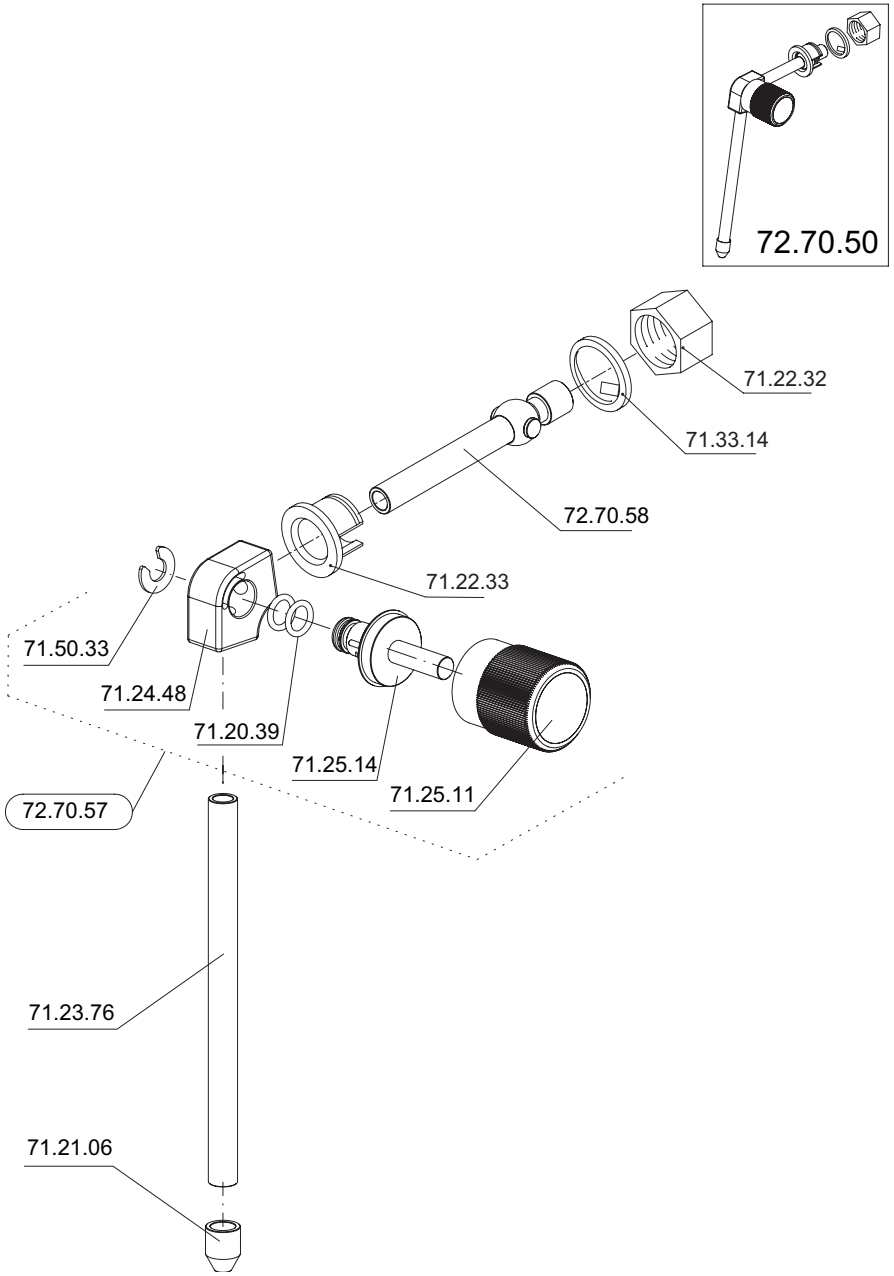

25. Milk Replenishment Unit

	Page	Revision	
		List	Drawing
MRU Standart	25.2.1/2	REV.4	REV.4

Part No.	Description	Quantity
95.75.00	**Milk Replenishment Unit B&W Standart**	**1**
95.70.00	**Liquid level/temperatur sensor, assembly**	**1**
95.70.10	Liquid level/temperatur sensor	1
95.70.20	Float	1
95.70.30	**Pump with support MRU, assembly**	**1**
MM.71.02	Tie-wrap with ball	1
04.05.00	Prevailing torque hex nut M5	2
71.31.95	SSR cover	1
71.40.31	Bolt M5x10	2
71.40.69	Cable tie	1
71.40.93	Rubber mounting bush M4	4
71.43.16	Support to vibration pump	1
71.50.12	Oval head screw Phillips M4x16	4
71.50.15	Oval head Phillips combi screw M4x8	2
94.21.50	**Pump Foamino with V-ring**	**1**
71.41.91	V-ring for pump support easyline	2
94.21.10	pump	1
95.70.31	**Support to vip-pump**	**1**
95.70.32	Wiring harness filling system	1
95.70.33	Semiconductor relay 25A without filter	1
95.70.34	Hose ø4/8x240mm	1
95.70.35	Hose ø4/8x2500mm	1
96.08.30	Suctioner C100	1
95.70.50	**Inflating tube, assembly**	**1**
10.09.10	O-ring ø5x1.5	1
80.05.10	milk connection	1
95.70.16	Support metal sheet angles suctioner	1
95.70.51	Hose ø5/8x320mm	1
96.08.30	Suctioner C100	1

95.75.00

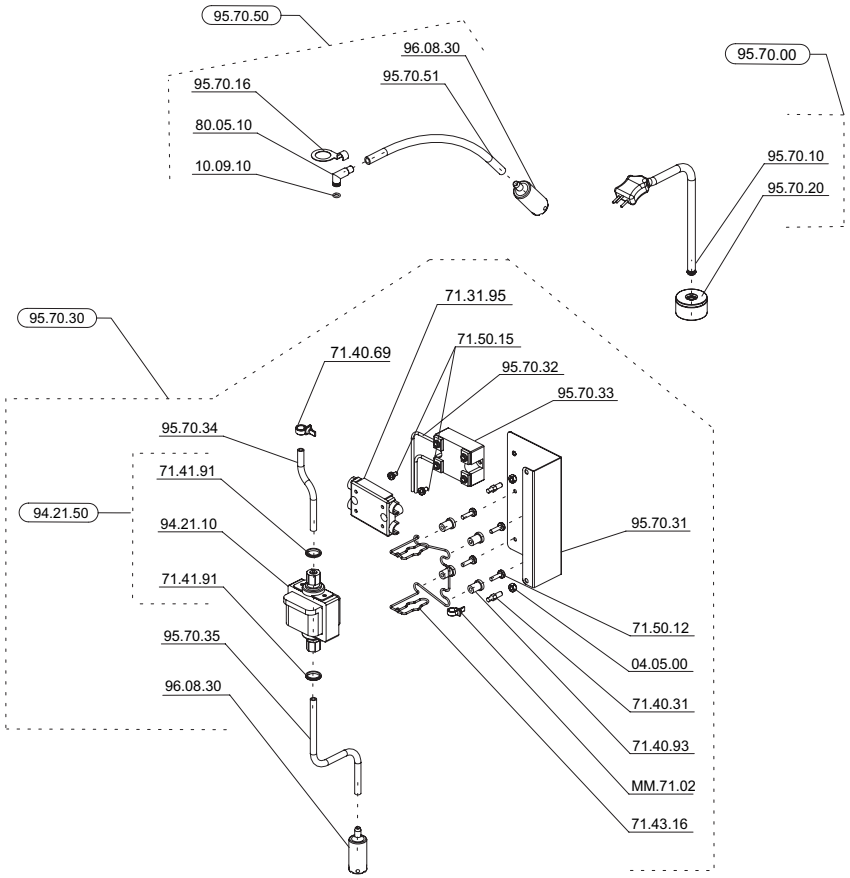

26. Coin changer

	Page	Revision	
		List	Drawing
Coin changer right	26.1.1/2	REV.0	REV.0
Coin changer left	26.2.1/2	REV.0	REV.0

Part No	Description	Quantity
1099--	coin changer right	1
04.04.00	Prevailing torque hex nut M4	2
04.05.00	Prevailing torque hex nut M5	3
70.30.05	Sidewall right for coin changer	1
70.30.09	Cover cap 4.8x6.4mm	4
70.30.11	Bottom with nut	1
70.30.12	Coin slot	1
70.30.13	Return tray	1
71.10.64	Latch	1
71.13.89	Coin peel for coin changer	1
71.14.64	Money support case	1
71.17.16	Sheet metal print fixation	1
71.31.19	Interface-Print MDB2	1
71.31.37	Interface-cord B&W, 1.8m	1
71.33.10	Cable MDB2 - coin changer	1
71.40.30	Quick snap	4
71.40.31	Bolt M5x10	1
71.40.60	Lock	1
71.40.69	Cable tie 85/22	6
71.42.01	Tie-wrap socle selfadhesive	6
71.45.67	Seal drip tray 160mm	1
71.49.08	Cover cap ø12.7-14.3	1
71.50.09	Cheese head screw Phillips M4x12	3
71.50.28	Flat washer M5	2
71.50.45	Hexagonal head cap screw M6x16	4
72.13.22	Front cover coin changer housing	1
72.13.23	Housing coin changer	1

1099

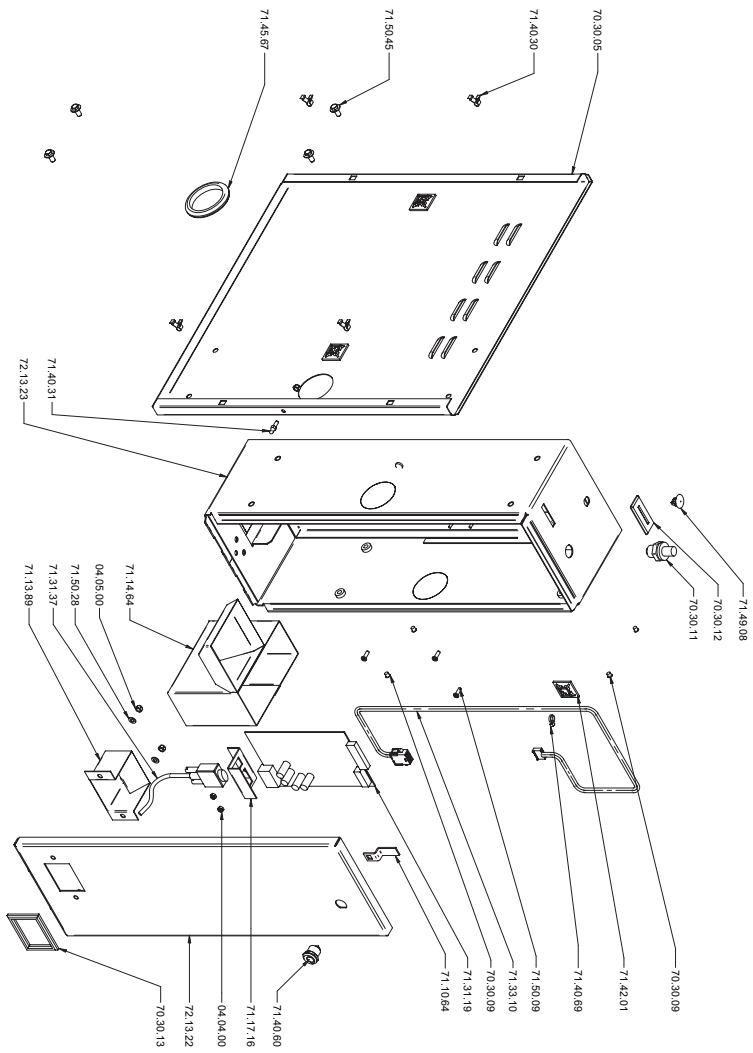

Part No	Description	Quantity
1094--	coin changer left	1
04.04.00	Prevailing torque hex nut M4	2
04.05.00	Prevailing torque hex nut M5	3
70.30.06	Sidewall left for coin changer	1
70.30.09	Cover cap 4.8x6.4mm	4
70.30.11	Bottom with nut	1
70.30.12	Coin slot	1
70.30.13	Return tray	1
71.10.64	Latch	1
71.13.89	Coin peel for coin changer	1
71.14.64	Money support case	1
71.17.16	Sheet metal print fixation	1
71.31.19	Interface-Print MDB2	1
71.31.37	Interface-cord B&W, 1.8m	1
71.33.10	Cable MDB2 - coin changer	1
71.40.30	Quick snap	4
71.40.31	Bolt M5x10	1
71.40.60	Lock	1
71.40.69	Cable tie 85/22	6
71.42.01	Tie-wrap socle selfadhesive	6
71.45.67	Seal drip tray 160mm	1
71.49.08	Cover cap ø12.7-14.3	1
71.50.09	Cheese head screw Phillips M4x12	3
71.50.28	Flat washer M5	2
71.50.45	Hexagonal head cap screw M6x16	4
72.13.22	Front cover coin changer housing	1
72.13.23	Housing coin changer	1
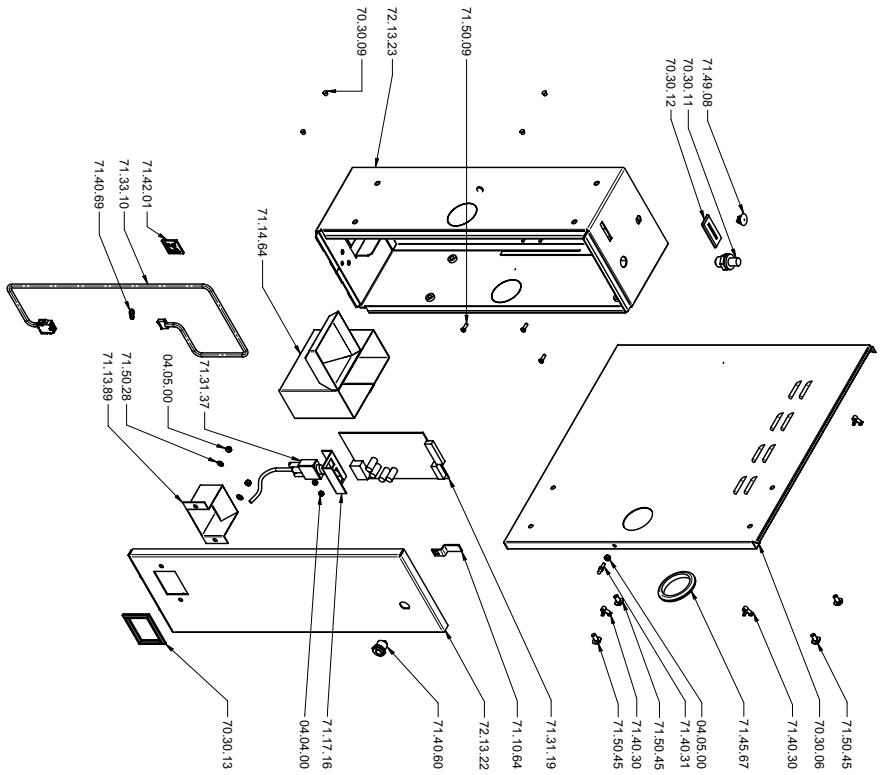
1094