IC COMPRESSOR SWITCH
IL COLDROOM LIGHT SWITCH
UC CONDENSING UNIT
LC COLDROOM LIGHT
EV EVAPORATOR
VE EVAPORATOR FAN
VS SOLENOID VALVE
L FUSE F20 20A
HPV FAN PRESSURE SWITCH
HPC HP PRESSURE SWITCH (OPTIONAL)
VSG HOT GAS SOLENOID VALVE
MSP DOOR MICROSWITCH (OPTIONAL)
RC COMPRESSOR CARTER RESISTANCE (OPTIONAL)
REA WATER EVAPORATOR RESISTANCE
K1 CARTER RESISTANCE RELAY (OPTIONAL)
K2 DEFROST RELAY

MICROSWITCH : If the door microswitch is installed remove bridges 9-9 and 10-10

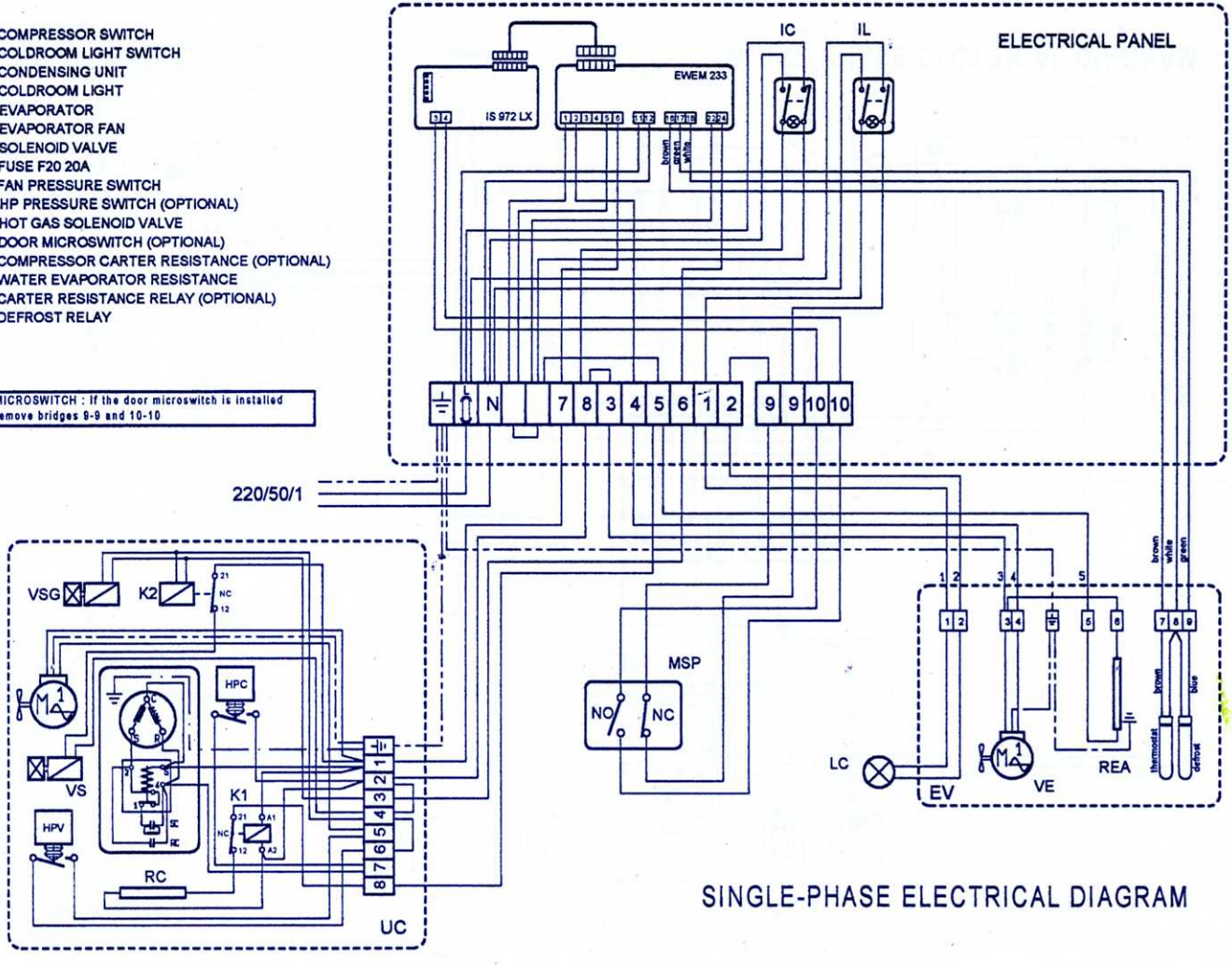

SINGLE-PHASE ELECTRICAL DIAGRAM