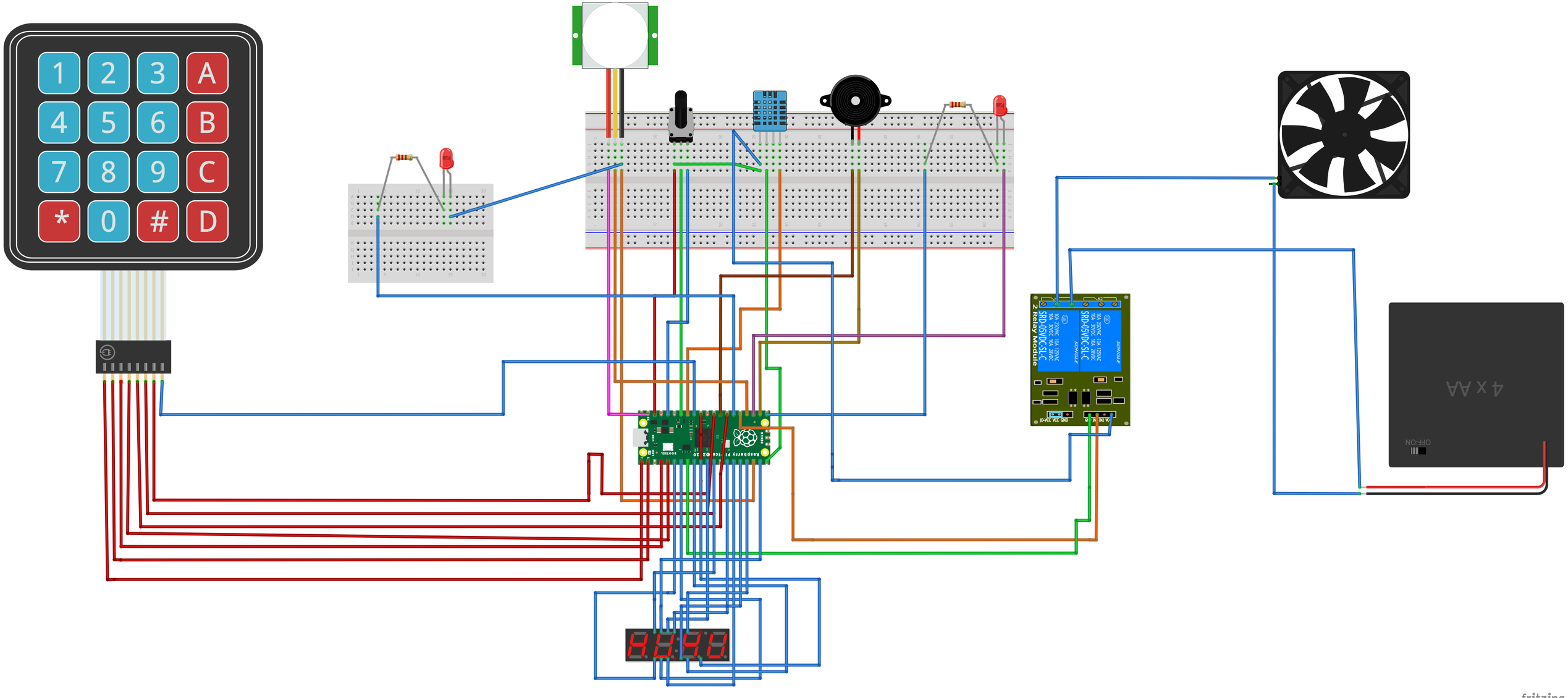
1 2 3 A
4 5 6 B
7 8 9 C
* 0 # D
2 Relay Module
SRD-05VDC-SL-C
4 x AA
OFF-ON
fritzing