NexaCity: Real-Time Smart Urban Monitoring System

Team ID -

Problem Statement: SmartScape 5G: Powering Intelligent Cities of the Future

Urban infrastructure is under pressure from rapid growth, while current smart systems lack real-time efficiency. 5G can enable faster, smarter, and more connected city management.

Objectives:

- Build real-time smart city solutions using 5G network infrastructure.
- Improve resource management (traffic, waste, energy)
- Enhance public safety and governance systems

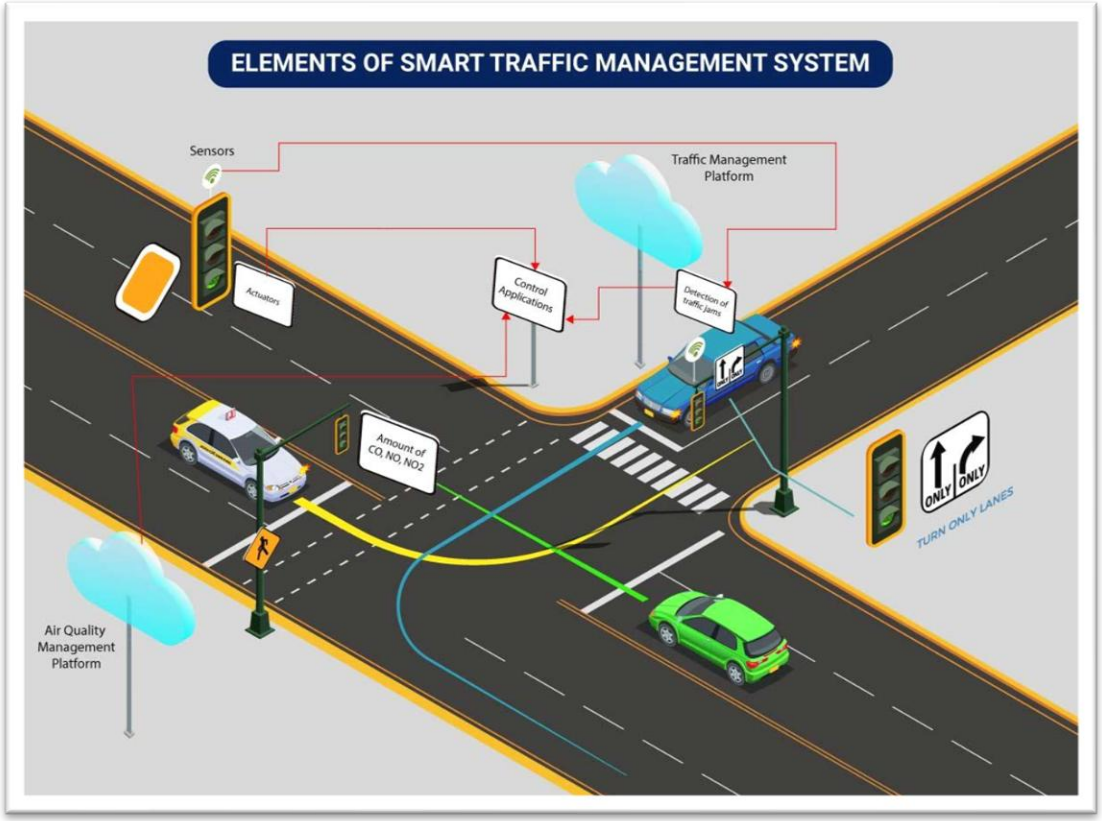

Methodology:

Hardware:

- Components list:
  - ESP32
  - Ultrasonic Sensor (HC-SR04)
  - PIR Module(HC-SR501)
- Tools Used:
  - Jumper Wires
  - Buck Converter
  - Battery

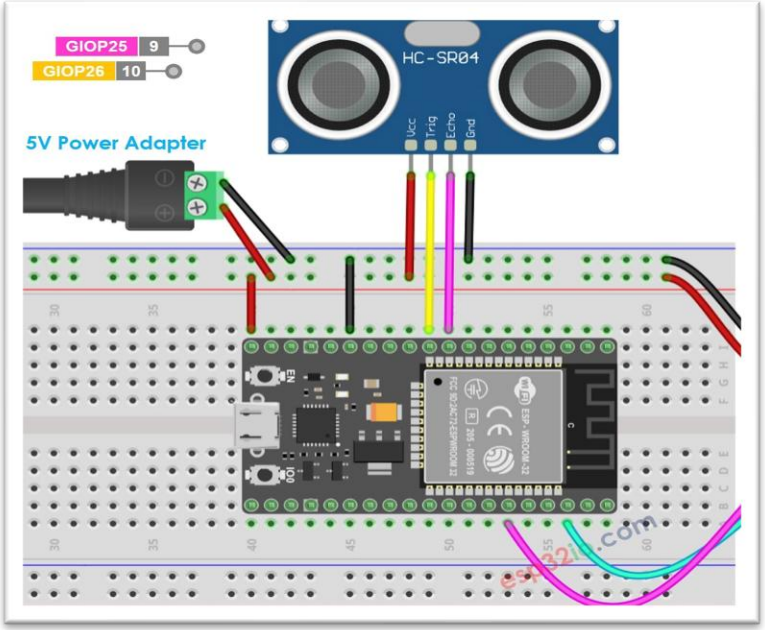

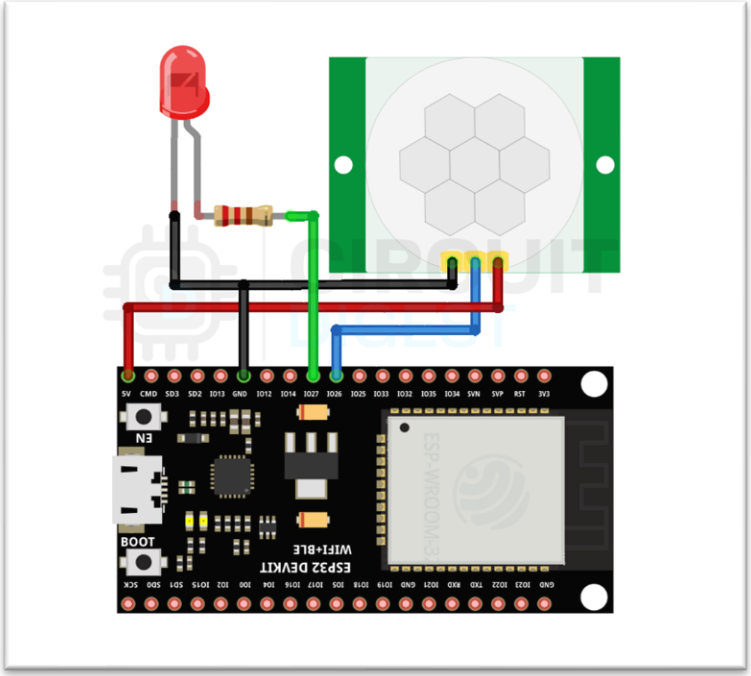

Methodology:

Tech Stack:

Containerization: Docker, Docker Compose,

Frontend & Auth: React (Vite, WebSockets), React Native, Firebase Auth (RBAC).

Backend: Node.js (APIs), Python (Edge Processing), MQTT (Mosquitto).

Data Layer: PostgreSQL (PostGIS), Redis (Cache & Realtime)

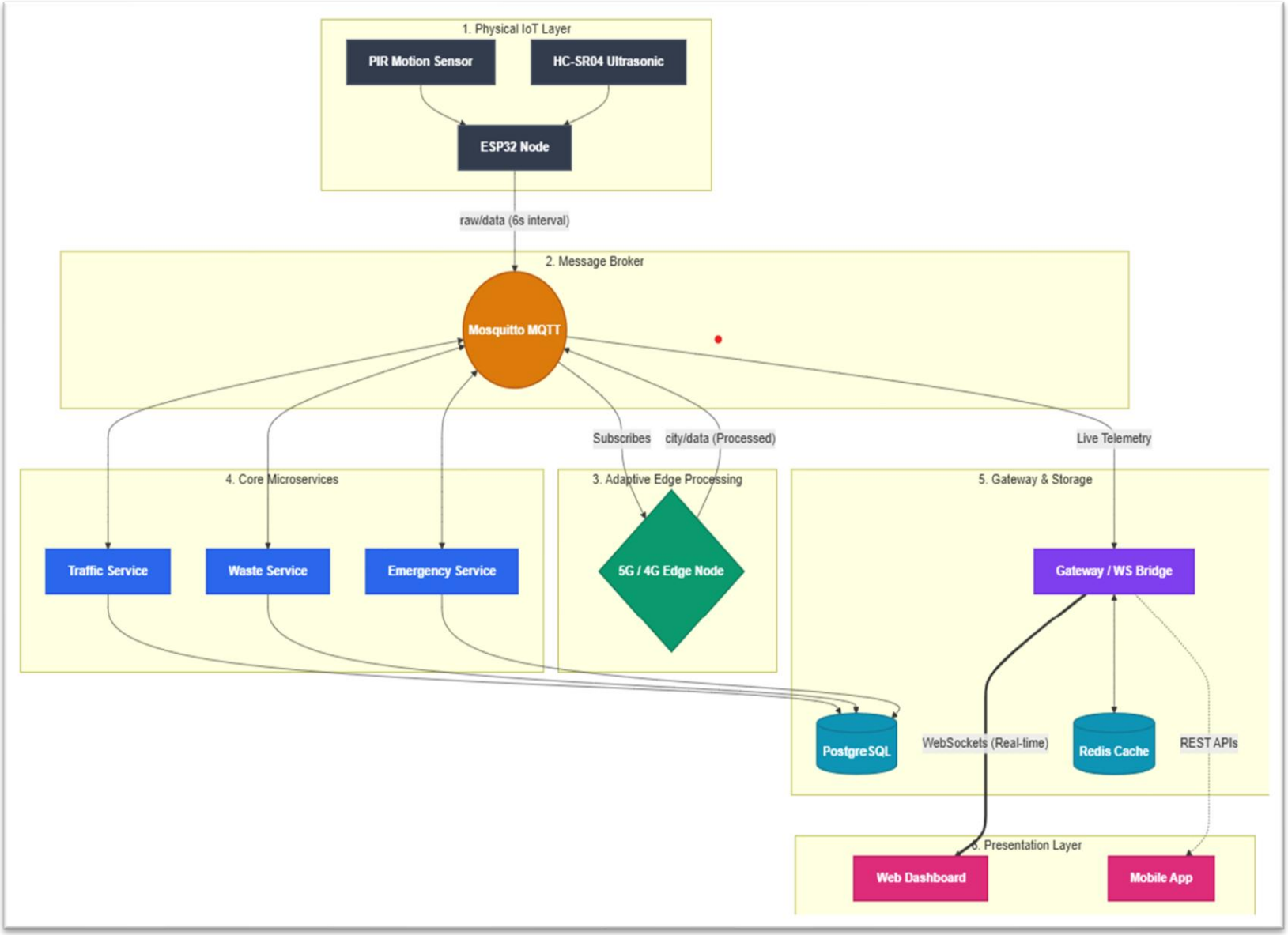

Unique Value Proposition (UVP):

AI-driven signal control via 5G edge nodes. Real-time rerouting & congestion alerts.

Panic SOS routing, auto-dispatch to nearest unit, incident command dashboard.

Smart bin sensors,
IoT fill-level alerts, AI-optimized collection route planning.

Smart meter analytics, demand forecasting, renewable integration, grid anomaly alerts.

- **Real-Time Intelligence:** 5G + edge computing for sub-10ms city decisions.
- **Modular Architecture:** Plug-and-play subsystems per city's needs.
- **AI Predictive Analytics:** Proactive alerts — not just reactive dashboards.
- **Scalable Deployment:** Microservices design supports multi-city rollout.
- **Hybrid Connectivity:** 4G/5G fallback ensures 24x7 uptime reliability.
- **Citizen-First Interface:** Multilingual React Native app with voice support.

Key Steps

- Sensor Integration: ESP32 with HC-SR04 and PIR for motion/proximity data
- Data Transmission: MQTT to Mosquitto (6s interval)
- Visualization: WebSockets to React dashboard and mobile app

Challenges & Fixes

- Noisy Sensors: Rolling average + debouncing
- Network Lag: Replaced HTTP with MQTT + WebSockets
- Power Drain: Optimized with 6s polling cycle

Key Innovations

- Adaptive Edge Node: Local processing on weak networks
- Auto Emergency Detection: 30s data triggers traffic response automatically

Comparative Study

Feature	Legacy Traffic Systems (SCATS / SCOOT)	Enterprise Platforms (e.g., Cisco Kinetic)	NexaCity (Our System)
Real-time Processing	Limited *(Polling Loop Delays)*	Medium *(Cloud Data-trip Latency)*	**Yes** *(Sub-millisecond WebSockets)*
Infrastructure Cost	High *(Expensive Road-embedded Loops)*	High *(Proprietary Gateways & Licensing)*	**Low** *(ESP32 Edge + Open-Source Stack)*
Scalability	Low *(Rigid Sub-systems)*	Medium *(Proprietary Network Lock-in)*	**High** *(Adaptive Edge + Microservices)*

Conclusion, Impact & Future Work

NexaCity uses low-cost ESP32 + WebSockets to replace rigid systems with a real-time, reactive smart network.

Impact

Smarter Cities: Affordable, vendor-independent urban upgrades

Traffic Reduction: Early bottleneck detection reduces congestion

Future Work

AI Integration: Predict traffic using ML (Random Forest)

Scaling: Expand to multi-zone, city-wide system

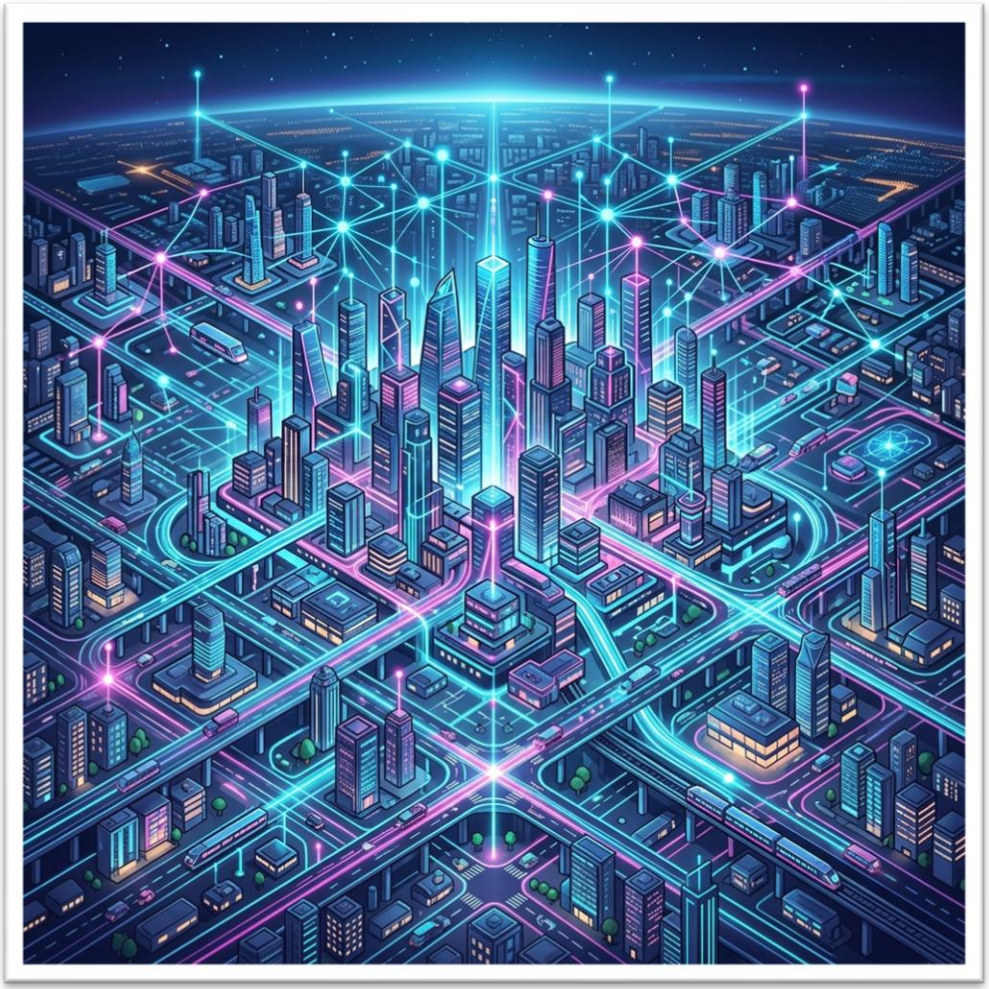

RESEARCH AND REFERENCES

RESEARCH:
•IEEE Xplore (2023): Smart City IoT architectures using 5G MEC for real-time urban traffic and emergency management
•Cisco Smart City Report (2022): Edge computing strategies for low-latency civic IoT applications
•NITI Aayog Smart Cities (2023): India's Smart Cities Mission outcomes, tech adoption, and lessons

REFERENCES:
•ITU Smart City KPIs Report, 2022
•MoHUA Smart Cities Mission Reports — smartcities.gov.in
•MQTT Protocol Specification v5.0 — mqtt.org
•5G MEC Architecture — ETSI EN 302 217
•TensorFlow Lite — tensorflow.org/lite