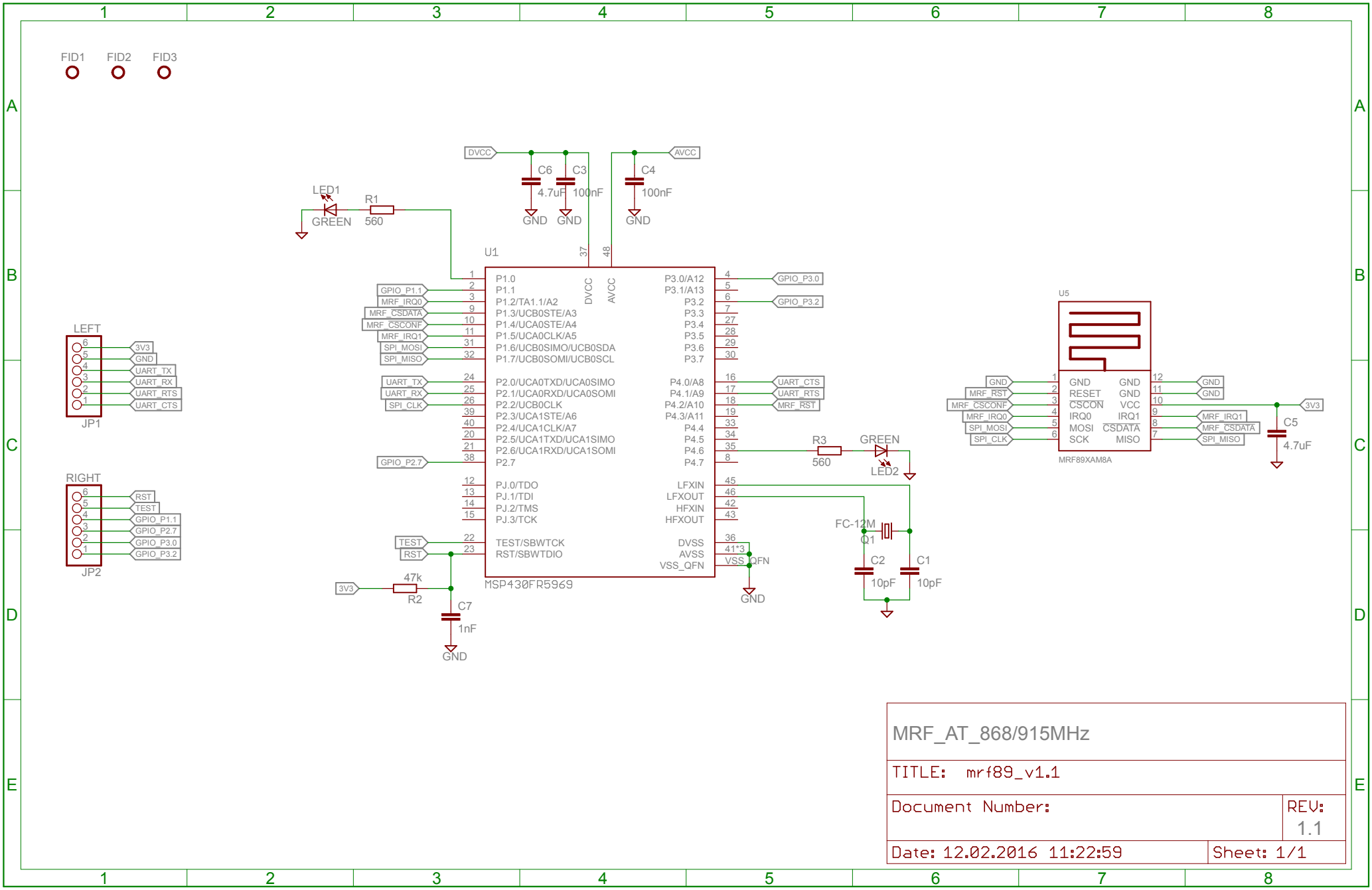

MRF_AT_868/915MHz

TITLE: mrf89_v1.1

Document Number:

REV: 1.1

Date: 12.02.2016 11:22:59

Sheet: 1/1