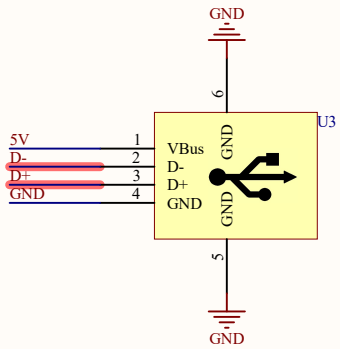

USB_TO_DEVICE

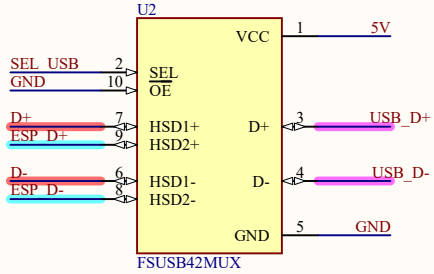

SWITCH IC

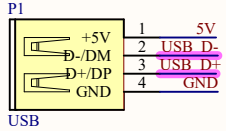

DISK_TO_USB

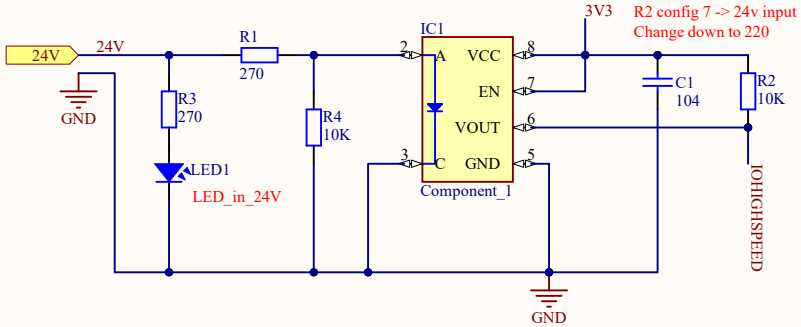

HIGH SPEED IO

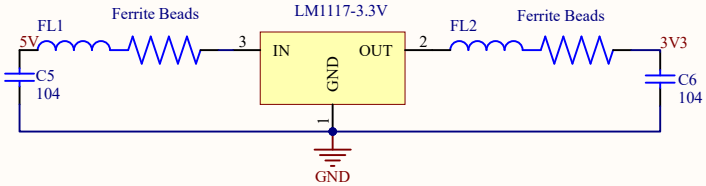

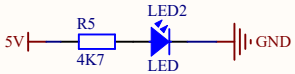

POWER

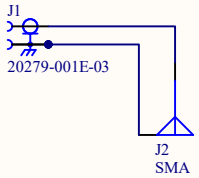

ANTENA_CONNECT

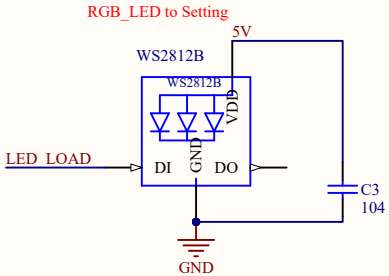

LED_SETTING

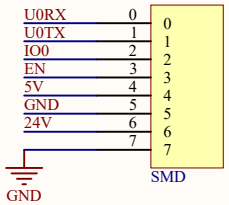

CONNECTOR

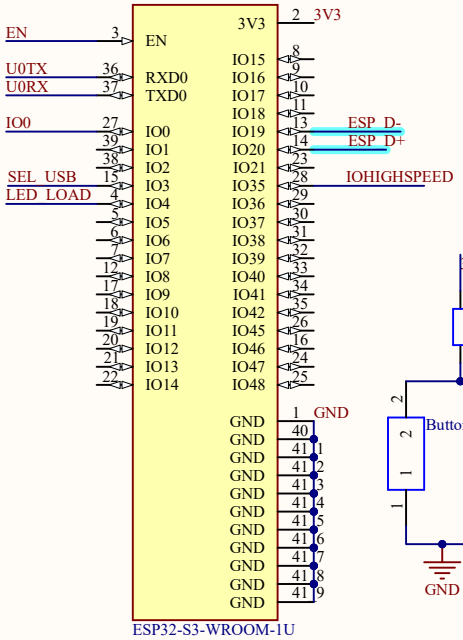

ESP32-S3

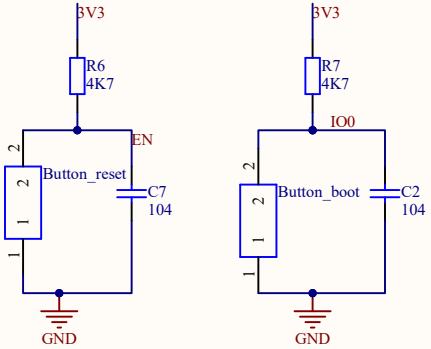

BUTTON