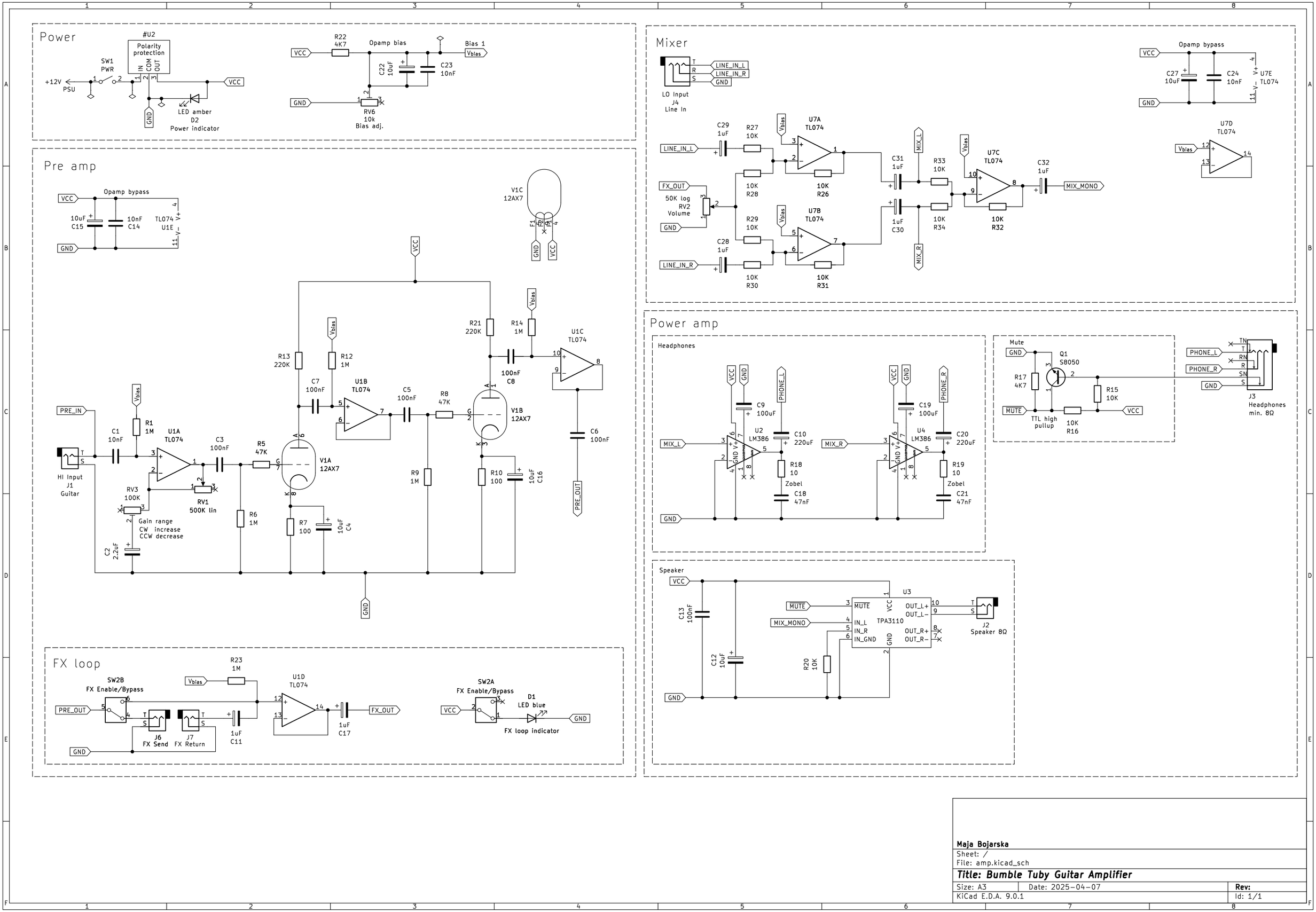


Maja Bojarska

Sheet: /

File: amp.kicad_sch

**Title: Bumble Tuby Guitar Amplifier**

| | | |
|---|---|---|
| Size: A3 | Date: 2025-04-07 | Rev: |
| KiCad E.D.A. 9.0.1 | | Id: 1/1 |