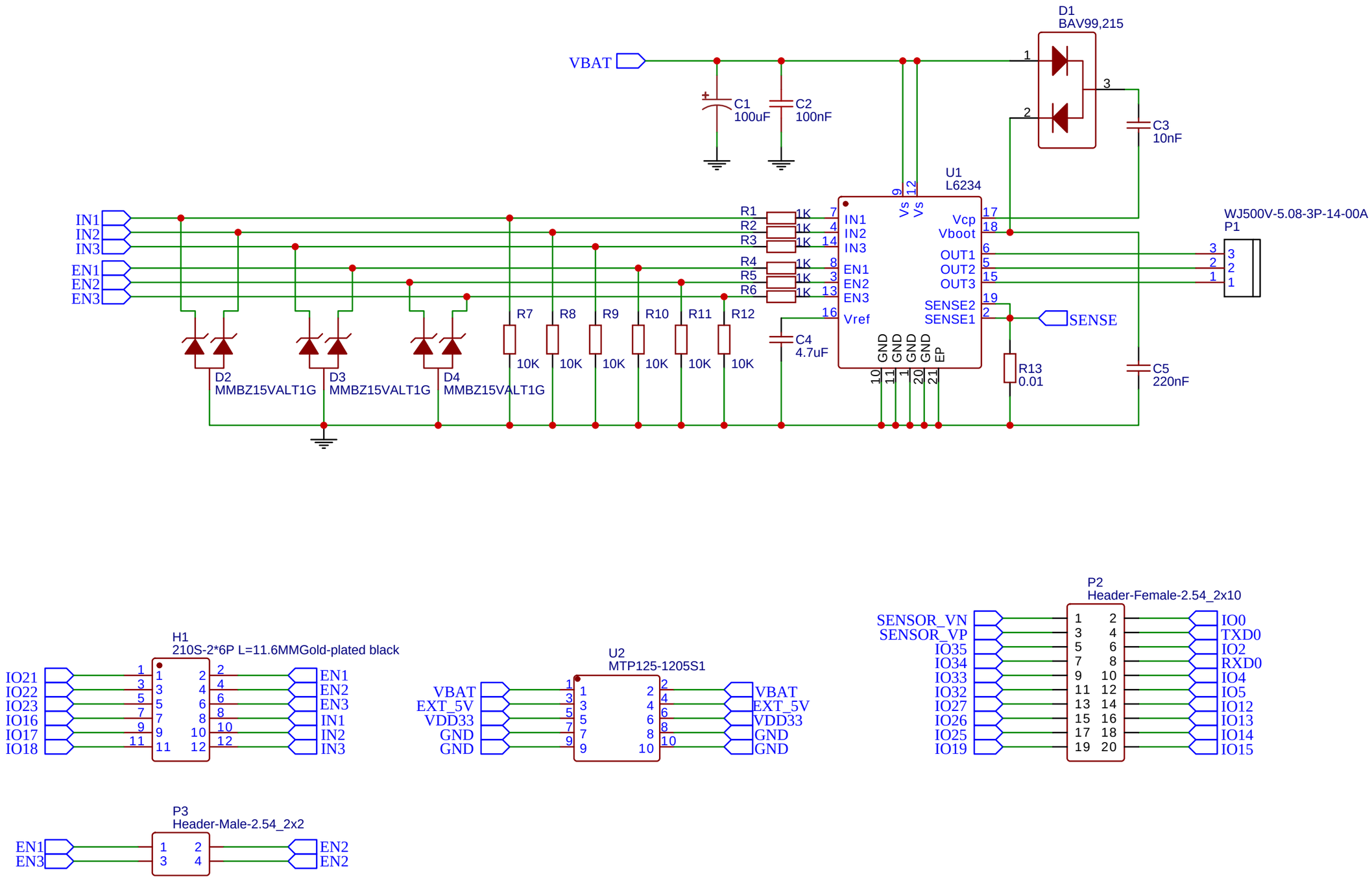

TITLE: ESP-MCB (Motor Driver/Pin-Headers)		REV: 1.0
EasyEDA	Company: Your Company	Sheet: 1/1
	Date: 2020-05-23 Drawn By: ploegmma	

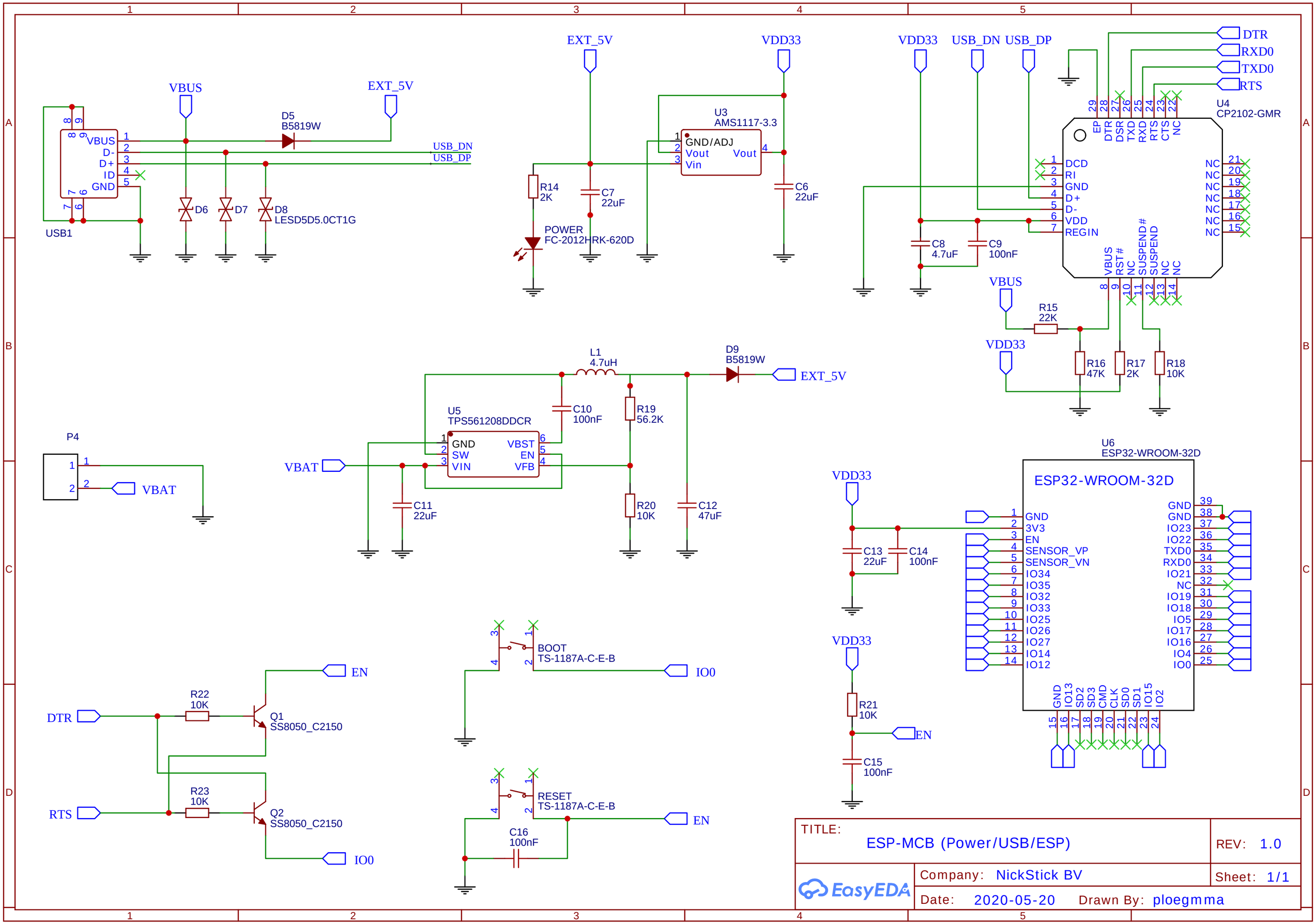
USB1
VBUS
D-
D+
ID
GND
D5
B5819W
D6
D7
D8
LESD5D5.0CT1G
EXT_5V
USB_DN
USB_DP
U3
AMS1117-3.3
GND/ADJ
Vout
Vin
R14
2K
C7
22uF
C6
22uF
POWER
FC-2012HRK-620D
VDD33
U4
CP2102-GMR
DTR
RXD0
TXD0
RTS
EP
DSR
RXD
CTS
NC
DCD
RI
REGIN
VBUS
RST#
SUSPEND#
SUSPEND
C8
4.7uF
C9
100nF
R15
22K
R16
47K
R17
2K
R18
10K
L1
4.7uH
D9
B5819W
U5
TPS561208DDCR
GND
SW
VIN
VBST
EN
VFB
C10
100nF
R19
56.2K
R20
10K
C11
22uF
C12
47uF
VBAT
P4
U6
ESP32-WROOM-32D
GND
3V3
EN
SENSOR_VP
SENSOR_VN
IO34
IO35
IO32
IO33
IO25
IO26
IO27
IO14
IO12
IO23
IO22
TXD0
RXD0
IO21
IO19
IO18
IO5
IO17
IO16
IO4
IO0
IO13
SD2
SD3
CMD
CLK
SD0
SD1
IO15
IO2
C13
22uF
C14
100nF
R21
10K
C15
100nF
BOOT
TS-1187A-C-E-B
IO0
RESET
TS-1187A-C-E-B
C16
100nF
R22
10K
R23
10K
Q1
SS8050_C2150
Q2
SS8050_C2150
DTR
RTS
EN
IO0
TITLE:
ESP-MCB (Power/USB/ESP)
REV: 1.0
Company: NickStick BV
Sheet: 1/1
Date: 2020-05-20
Drawn By: ploegmma
EasyEDA