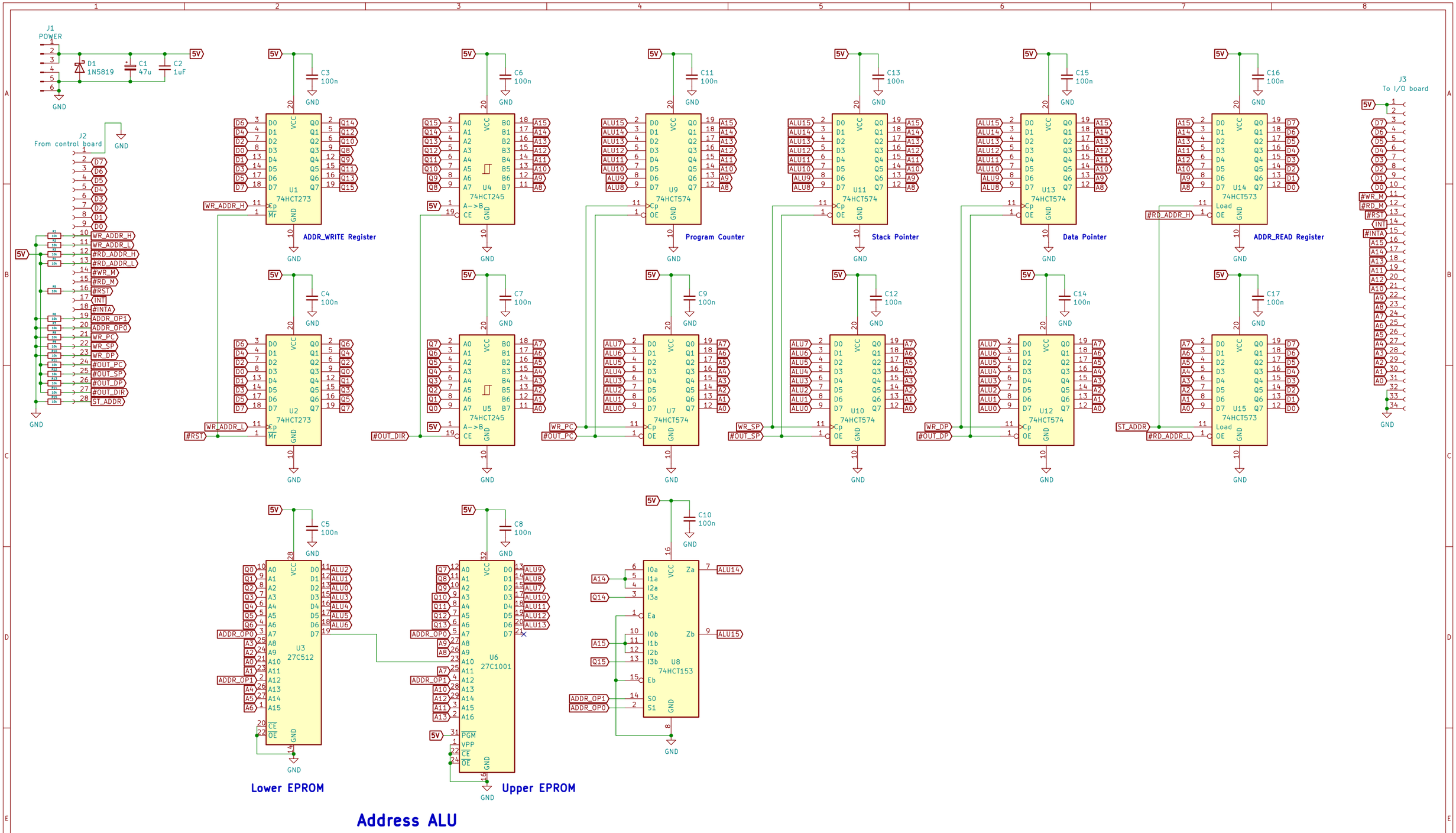

MINT

Sheet: /

File: Address_board.sch

Title: Address bus driver for 8-bit CPU

Size: A3	Date: 2025-06-23	Rev: 2
KiCad E.D.A. kicad (5.1.12)-1		Id: 1/1