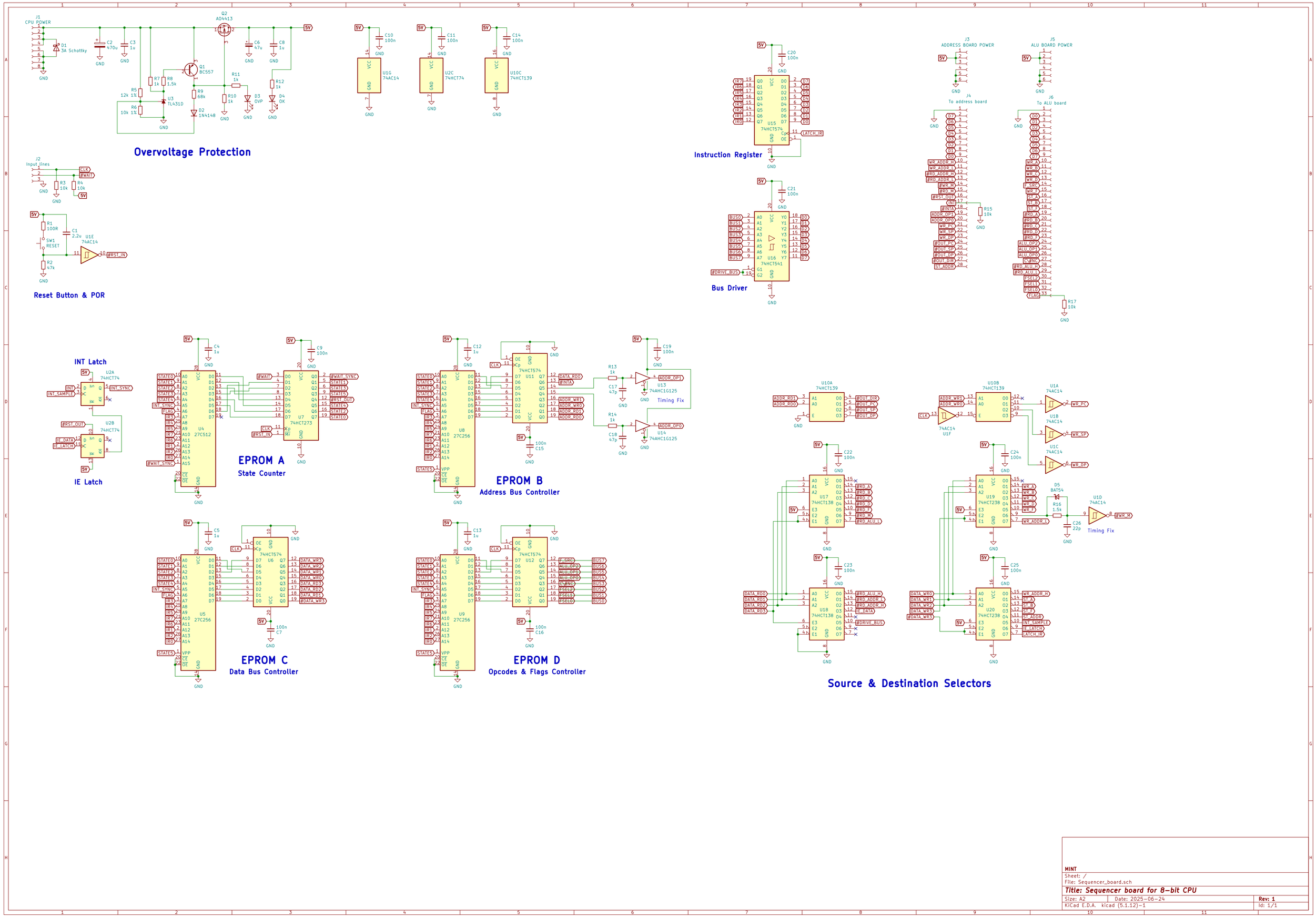
Overvoltage Protection
Reset Button & POR
Instruction Register
Bus Driver
INT Latch
IE Latch
EPROM A
State Counter
EPROM B
Address Bus Controller
EPROM C
Data Bus Controller
EPROM D
Opcodes & Flags Controller
Source & Destination Selectors
Timing Fix
MINT
Sheet: /
File: Sequencer_board.sch
Title: Sequencer board for 8-bit CPU
Size: A2
Date: 2025-06-24
Rev: 1
KiCad E.D.A. kicad (5.1.12)-1
Id: 1/1

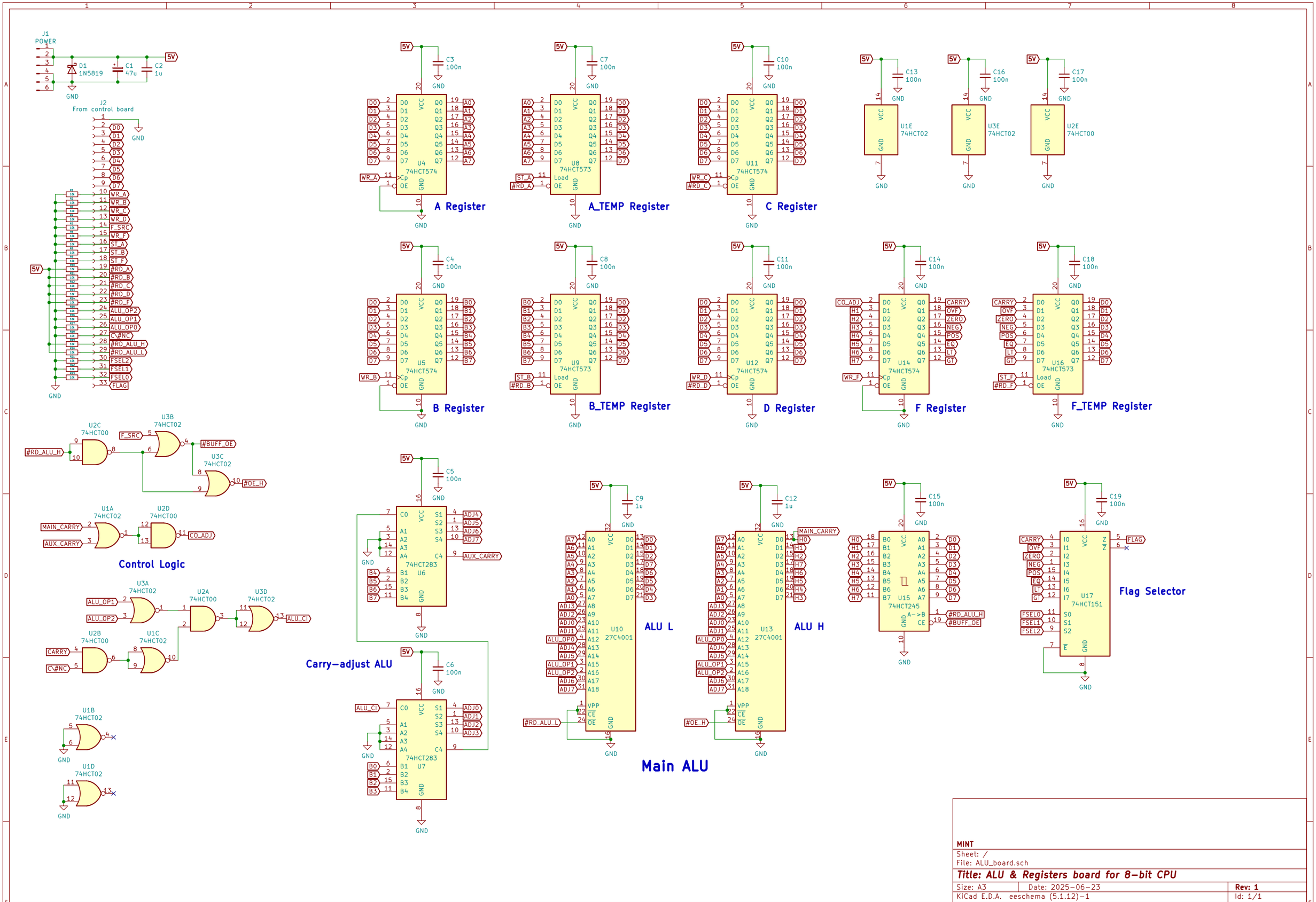
J1
POWER
D1
1N5819
C1
47u
C2
1u
5V
GND
J2
From control board
WR_A
WR_B
WR_C
WR_D
F_SRC
WR_F
ST_A
ST_B
ST_F
#RD_A
#RD_B
#RD_C
#RD_D
#RD_F
ALU_OP2
ALU_OP1
ALU_OP0
C\#NC
#RD_ALU_H
#RD_ALU_L
FSEL2
FSEL1
FSEL0
FLAG
A Register
U4
74HCT574
A_TEMP Register
U8
74HCT573
C Register
U11
74HCT574
U1E
74HCT02
U3E
74HCT02
U2E
74HCT00
B Register
U5
74HCT574
B_TEMP Register
U9
74HCT573
D Register
U12
74HCT574
F Register
U14
74HCT574
F_TEMP Register
U16
74HCT573
U2C
74HCT00
U3B
74HCT02
U3C
74HCT02
#BUFF_OE
#OE_H
U1A
74HCT02
U2D
74HCT00
MAIN_CARRY
AUX_CARRY
CO_ADJ
Control Logic
U3A
74HCT02
U2A
74HCT00
U3D
74HCT02
ALU_OP1
ALU_OP2
ALU_CI
U2B
74HCT00
U1C
74HCT02
CARRY
C\#NC
U1B
74HCT02
U1D
74HCT02
U6
74HCT283
U7
74HCT283
Carry-adjust ALU
ALU L
U10
27C4001
ALU H
U13
27C4001
Main ALU
U15
74HCT245
Flag Selector
U17
74HCT151
FLAG
MINT
Sheet: /
File: ALU_board.sch
Title: ALU & Registers board for 8-bit CPU
Size: A3
Date: 2025-06-23
Rev: 1
KiCad E.D.A. eeschema (5.1.12)-1
Id: 1/1

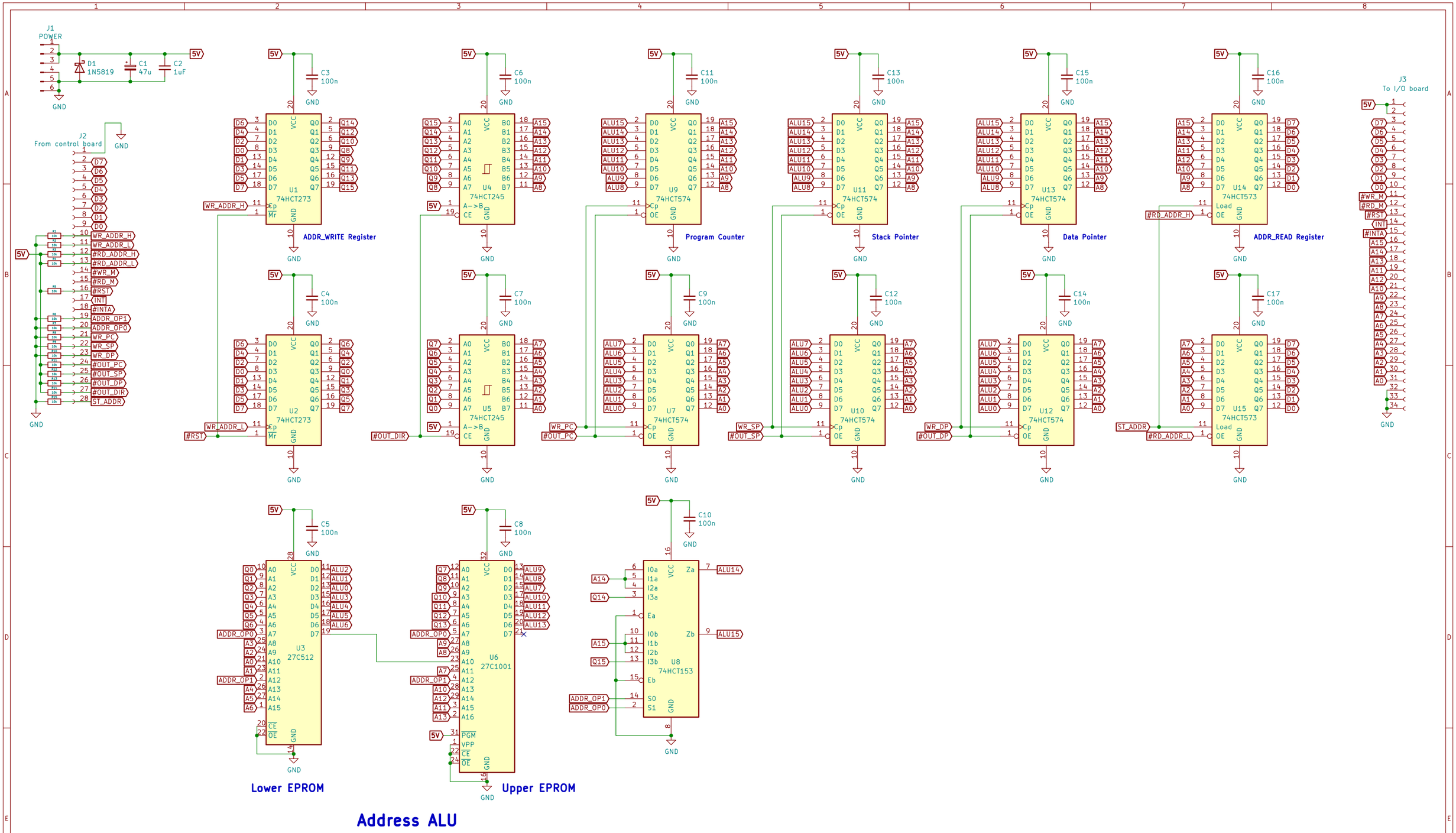

MINT

Sheet: /

File: Address_board.sch

Title: Address bus driver for 8-bit CPU

Size: A3	Date: 2025-06-23	Rev: 2
KiCad E.D.A. kicad (5.1.12)-1		Id: 1/1

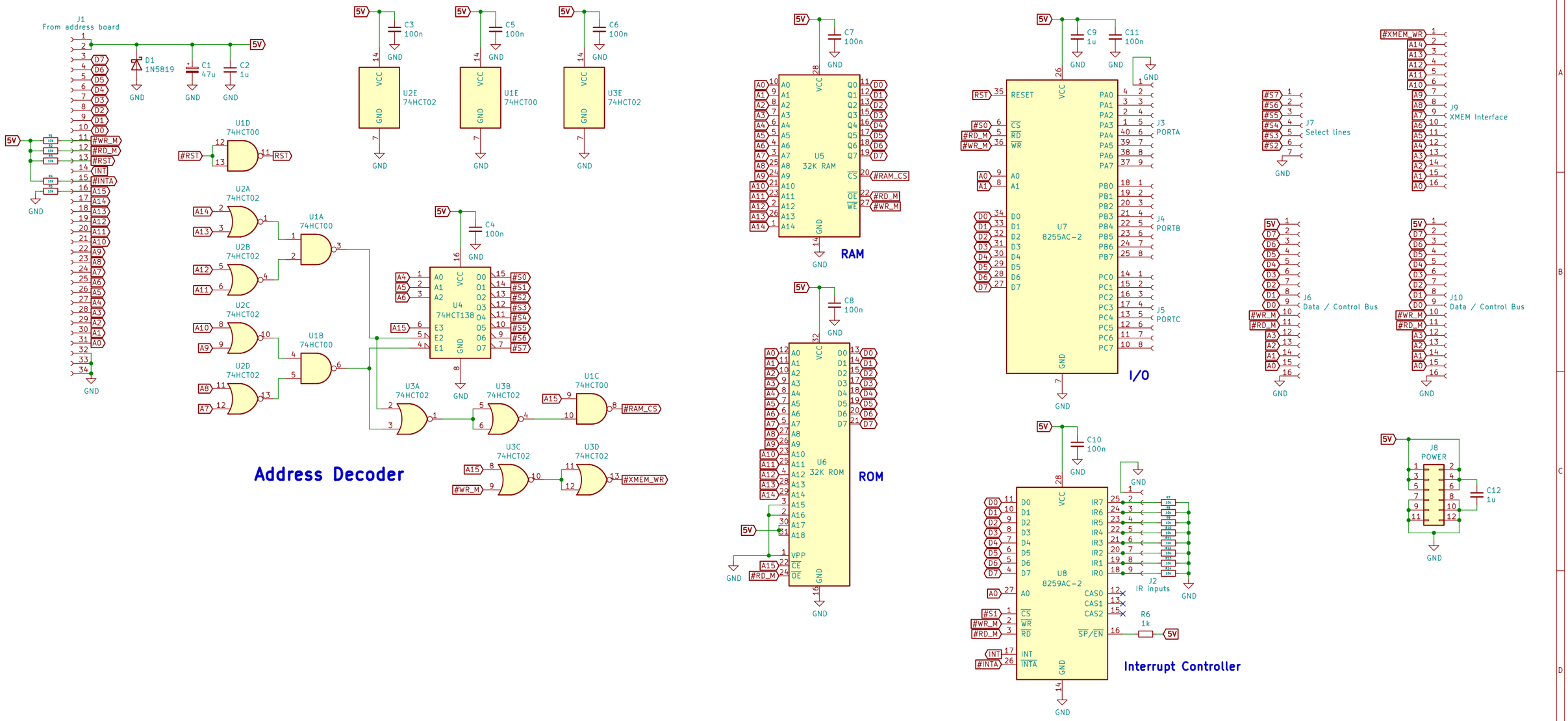

MINT

Sheet: /

File: Mem_IO_board.sch

Title: Memory & I/O board for 8-bit CPU

Size: A3	Date: 2025-06-23	Rev: 2
KiCad E.D.A. eeschema (5.1.12)-1		Id: 1/1