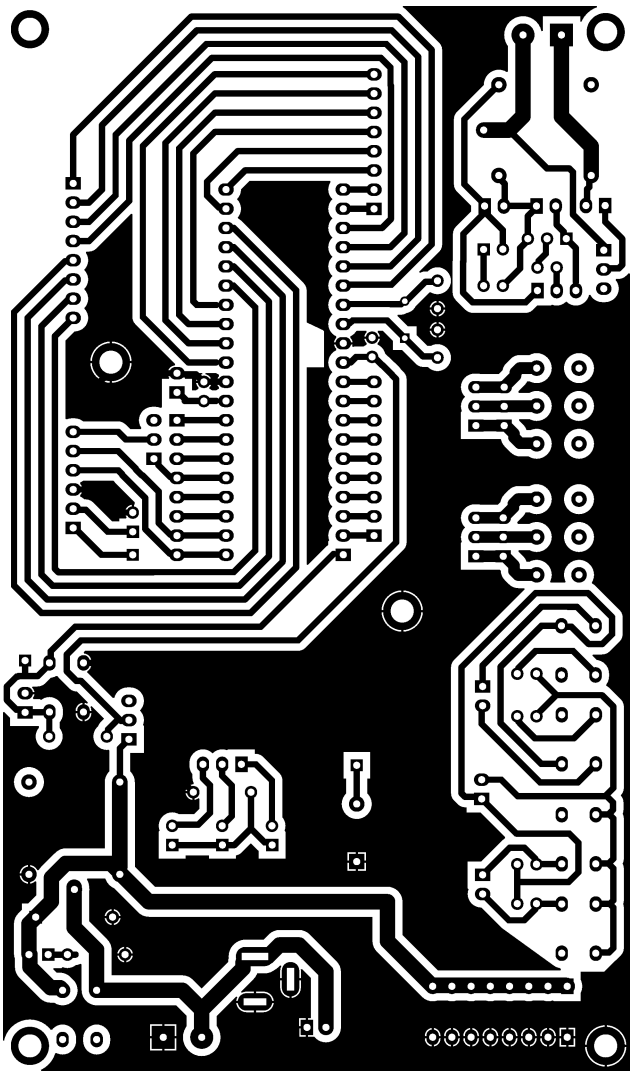

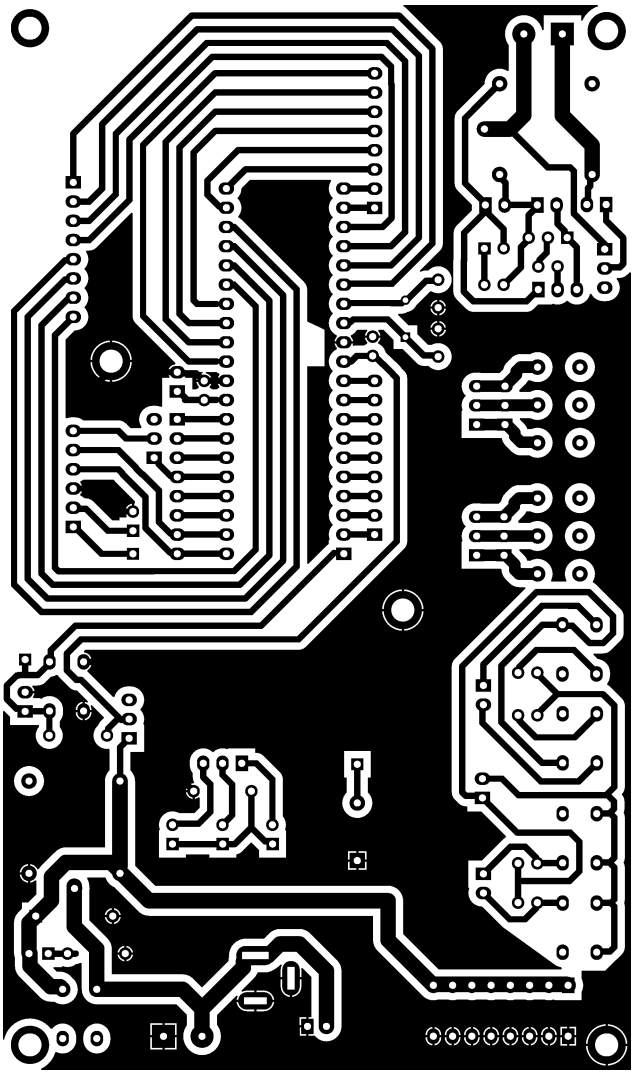

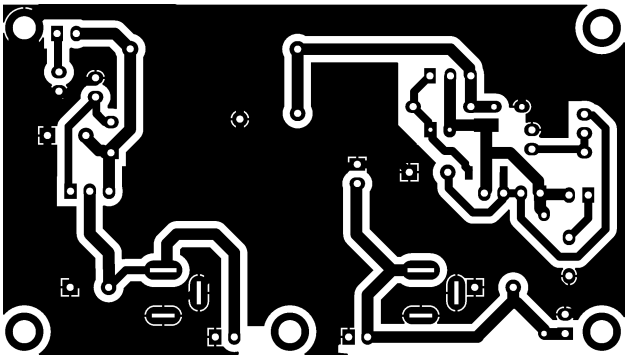

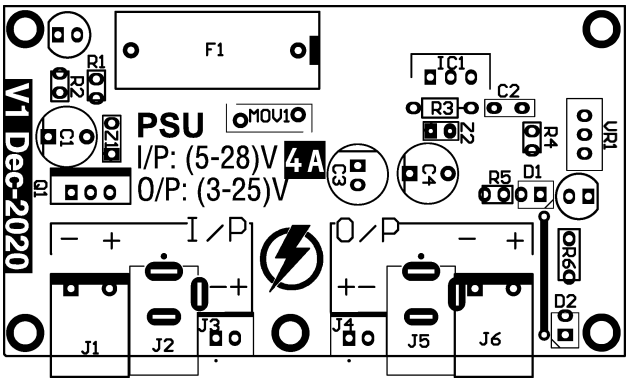
F1
R1
R2
C1
ZD
Q1
MOV1
PSU
I/P: (5-28)V
O/P: (3-25)V
4A
IC1
R3
C2
ZZ
R4
VR1
C3
C4
R5
D1
R6
D2
I/P
O/P
J1
J2
J3
J4
J5
J6
V1 Dec-2020

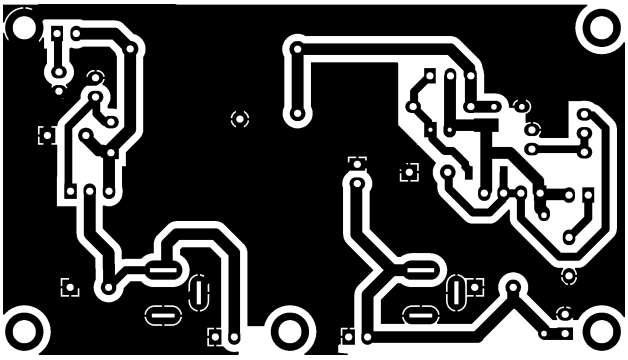

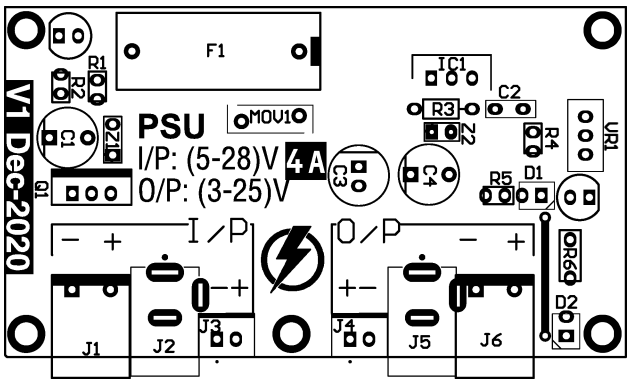
F1
R1
R2
C1
ZD
Q1
MOV1
PSU
I/P: (5-28)V
O/P: (3-25)V
4A
IC1
R3
C2
ZZ
R4
VR1
C3
C4
R5
D1
R6
D2
I/P
O/P
J1
J2
J3
J4
J5
J6
V1 Dec-2020

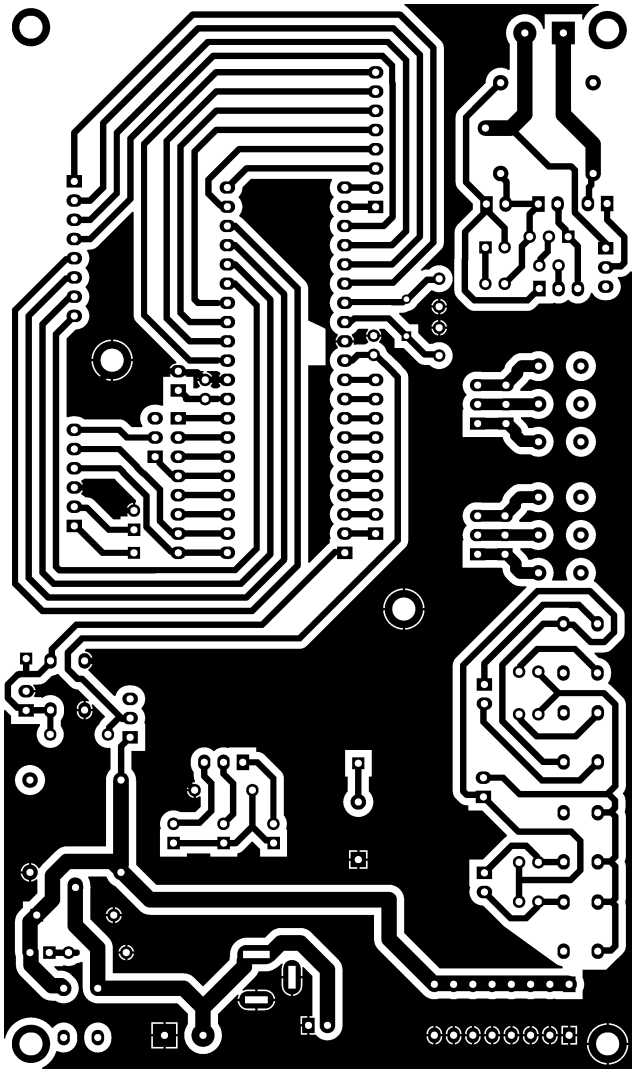

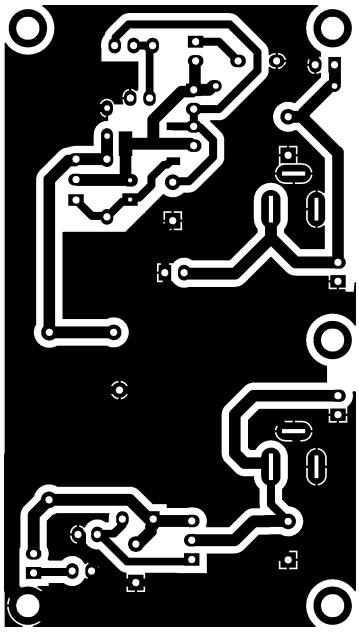

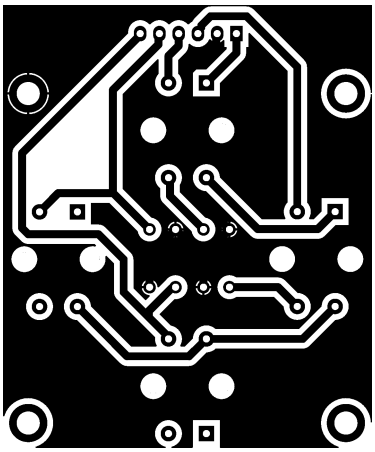

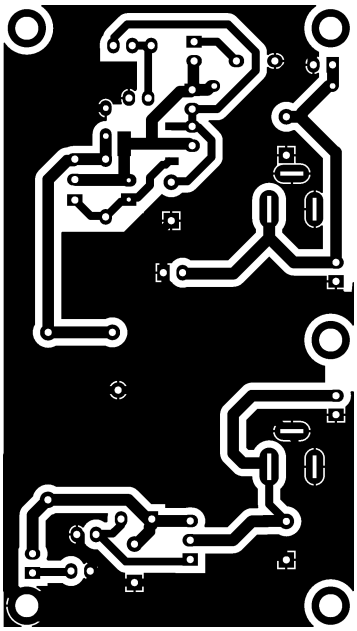

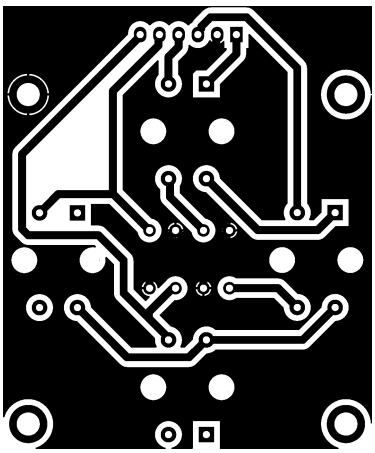

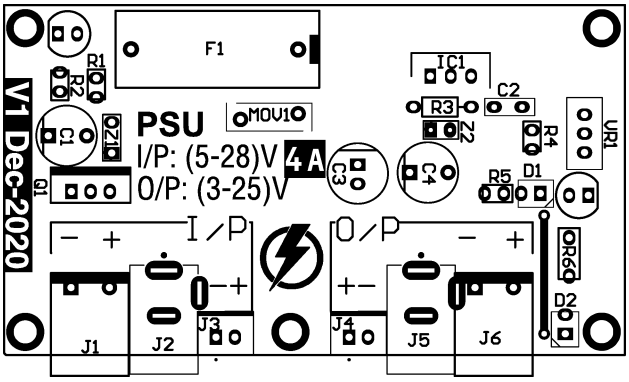
F1
R1
R2
IC1
C2
R3
ZZ
R4
VR1
C1
DZ1
MOV1
PSU
I/P: (5-28)V
O/P: (3-25)V
4A
C3
C4
R5
D1
Q1
V1 Dec-2020
I/P
O/P
R6
D2
J1
J2
J3
J4
J5
J6

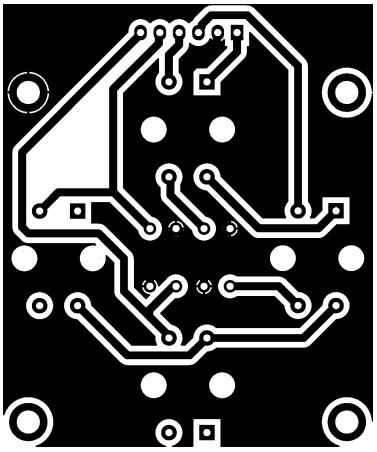

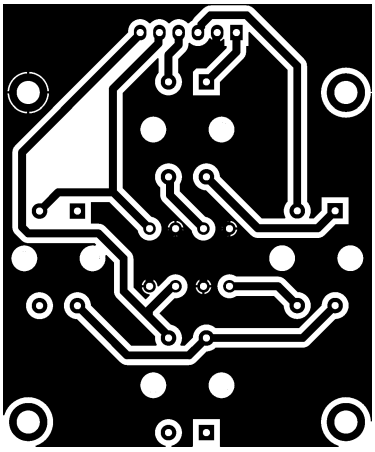

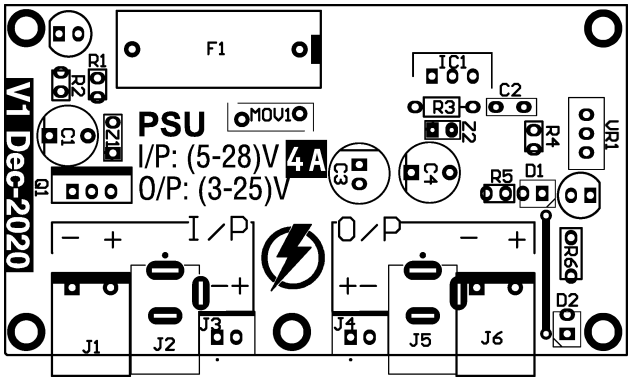
F1
R1
R2
IC1
C2
R3
ZZ
R4
VR1
C1
DZ1
MOV1
PSU
I/P: (5-28)V
O/P: (3-25)V
4A
C3
C4
R5
D1
Q1
V1 Dec-2020
I/P
O/P
R6
D2
J1
J2
J3
J4
J5
J6

EDUCATIONAL KIT
PIC16F877A
V1 DEC-2020
Burner
RST
+VE
-VE
PGD
PGC
LVP
C0
C1
C2
C3
C5
C6
C7
C8
RST
LVP
on
off
B0
B1
B2
B3
B4
B5
B6
B7
C4
IC1
A0
A1
A2
A3
A4
A5
E0
E1
E2
C3
D0
D1
D2
D3
D4
D5
D6
D7
C2
C1
Relay Interface
VCC
CON
GND
RL2
VR2
VR1
Power Out
Pull UP
Pull Down
PU1
PU2
VCC
GND
PD1
PD2
R4
R5
R6
R7
SW5
SW6
SW3
SW4
Buzzer
I/P: 5V
R8
R
G
Y
RL1
R2
SW2
PROG
RST
SW1
R1
D1
Latch
Short

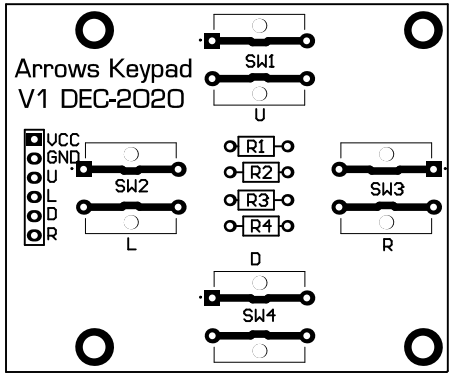
Arrows Keypad
V1 DEC-2020
VCC
GND
U
L
D
R
SW1
U
SW2
L
R1
R2
R3
R4
D
SW3
R
SW4