Unit-3

Maintenance of transformer & Switchgear

❖ Transformer

- A transformer is a static electrical device that transfers AC electrical energy between circuits through electromagnetic induction, typically changing voltage levels (stepping up or down) without altering frequency.

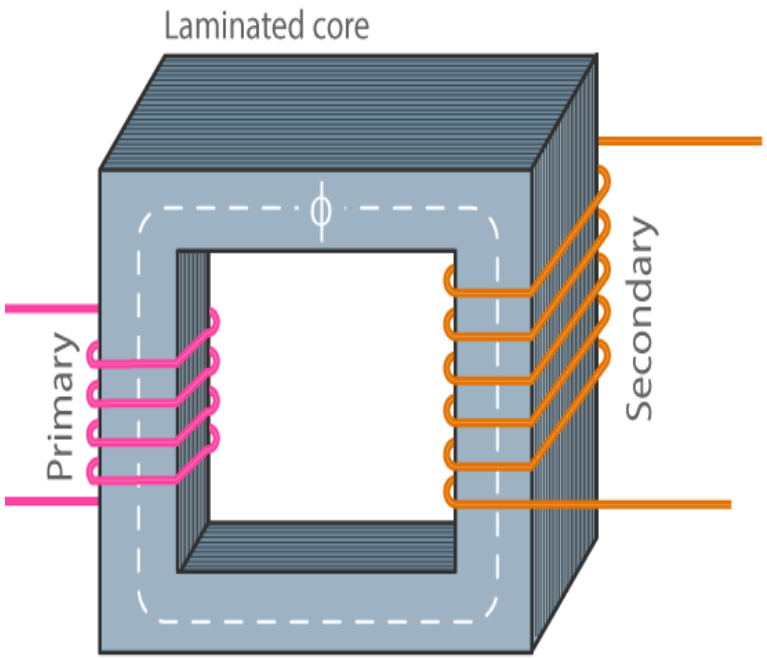

➢ *Dry Type*

Dry-type transformers are usually air cooled with winding insulation of class A, B, C, or H. The dry-type transformer can be either self-cooled or forced air cooled

1. Self-cooled: A self-cooled transformer of the dry type is cooled by natural circulation of air through the transformer case. The cooling class designation for this transformer is AA.

2. Forced air cooled: A forced air-cooled transformer of dry type is cooled by means of forced circulation of air through the case. Transformers of this type have air-blast equipment such as fans with louvered or screened openings. These transformers are rated at 133% of the rating of the self-cooled dry-type transformers. The cooling class designation for this transformer is FA. Dry type transformers can be obtained with both self-cooled and forced air-cooled rating. The designation for such a transformer is AA/FA. Dry-type transformers can also be cooled by gas instead of air. For such transformers, a sealed tank is required.

❖ Dry Type Transformer

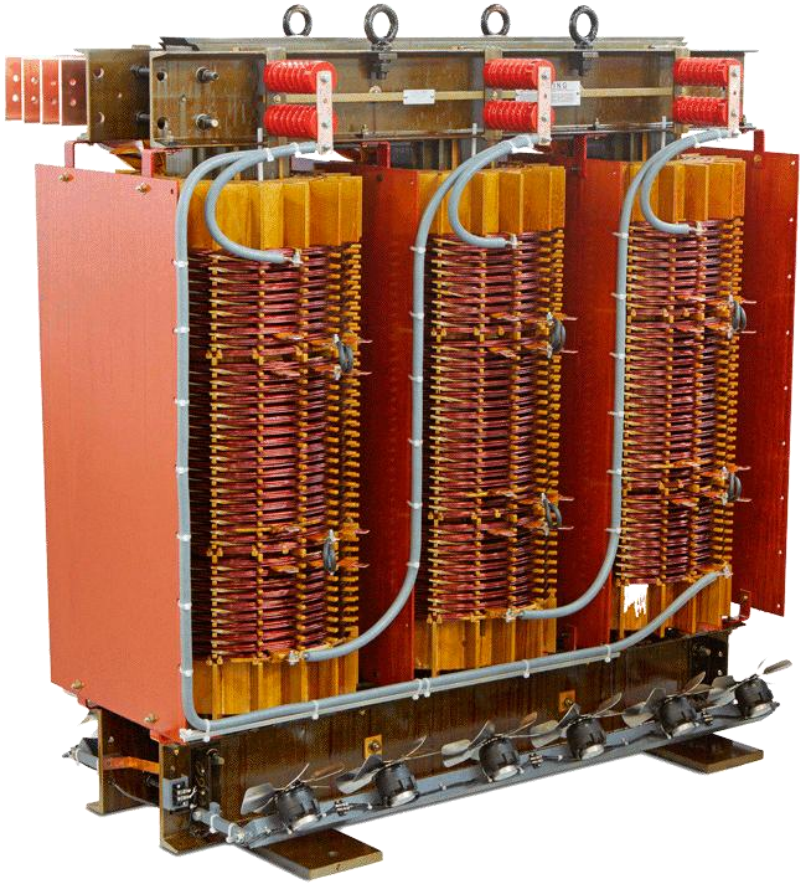

➢ oil-Filled Transformer

➢ Oil-Filled Transformer

- In this type of transformer, the windings and core are totally immersed in a liquid contained in the transformer tank. The tank is equipped with cooling fins for circulation of the transformer liquid. The transformer liquid provides an insulating medium for the coils as well as for dissipation of heat.

❖ Transformer Inspection & Maintenance Checklist

Sr. No.	Inspection Item	Check Points
1	Oil Level	Check transformer oil level in conservator and ensure it is within the marked limit.
2	Oil Leakage	Inspect tank, radiator, valves, and gaskets for any oil leakage.
3	Oil Condition	Check color and clarity of oil; if dark or contaminated, testing/replacement may be required.
4	Breather Condition	Check silica gel color in breather; replace if it becomes pink or saturated.
5	Temperature Indicator	Verify WTI/OTI readings and ensure temperature is within safe limits.
6	Cooling System	Check radiators, cooling fans, and oil pumps for proper operation.
7	Bushings	Inspect for cracks, dust, oil leakage, and clean the bushings.
8	Earthing System	Ensure proper grounding and check earthing connections are tight.
9	Tap Changer	Check tap position and ensure smooth operation if applicable.
10	Noise / Vibration	Observe unusual sound or vibration during operation.
11	Conservator & Oil Level Gauge	Verify proper functioning of oil level indicator.
12	Explosion Vent / Buchholz Relay	Inspect for proper functioning and ensure no gas accumulation.
13	Protection System	Check relays, alarms, and trip circuits.
14	Cleaning	Remove dust and dirt from transformer body and surrounding area.
15	Record Readings	Record voltage, current, temperature, and load conditions.

❖ Routine test of transformer

1.Measurement of d.c resistance winding

2. Measurement of voltage ratio and check of volatge vector relationship (Ploarity & Phasing out test)

3.Measurment of impedance voltage short circuit impedance and load loss

4. Measurement of no. load loss and magnetizing current

5.Measurment of insulation resistance

6.Dielectric tests

7.Test on on-load tap changer

❖ Measurement of insulation Resistance

- Before commissioning the transformer it is necessary to know that the insulation resistance of a transformer is grater than a specified value, to avoid excessive leakage current.
- Megger test for insulation are carried out between winding, between winding & core & between core and clamping bolts.
- The insulation resistance of each winding, in turn,to all the other windings, core and frame or tank connected together, and to earth shall be measured and recorded.
- Following table can be referred for megger test.

Voltage of winding	Voltage applied by megger	Min.insulation resistance(M Ohm)
400V	500V	2
11KV	1000V	50
33KV	2500V	150
132KV	2500V	500

- **The following test of insulation resistance**

1. Separate source voltage withstand test
2. Induced over voltage withstand test
3. Lightening impulse test

❖ Separate Source Voltage Withstand Test

- The Separate Source Voltage Withstand Test is a dielectric test used to check the insulation strength of transformer windings. In this test, a high AC voltage from an external source is applied between the winding and earth to ensure the insulation can withstand over-voltage conditions.

➢ The motive to conduct this test

- To verify the insulation capability of transformer windings.
- To ensure there is no breakdown of insulation between winding and ground.
- To check the transformer can safely handle temporary over-voltage.

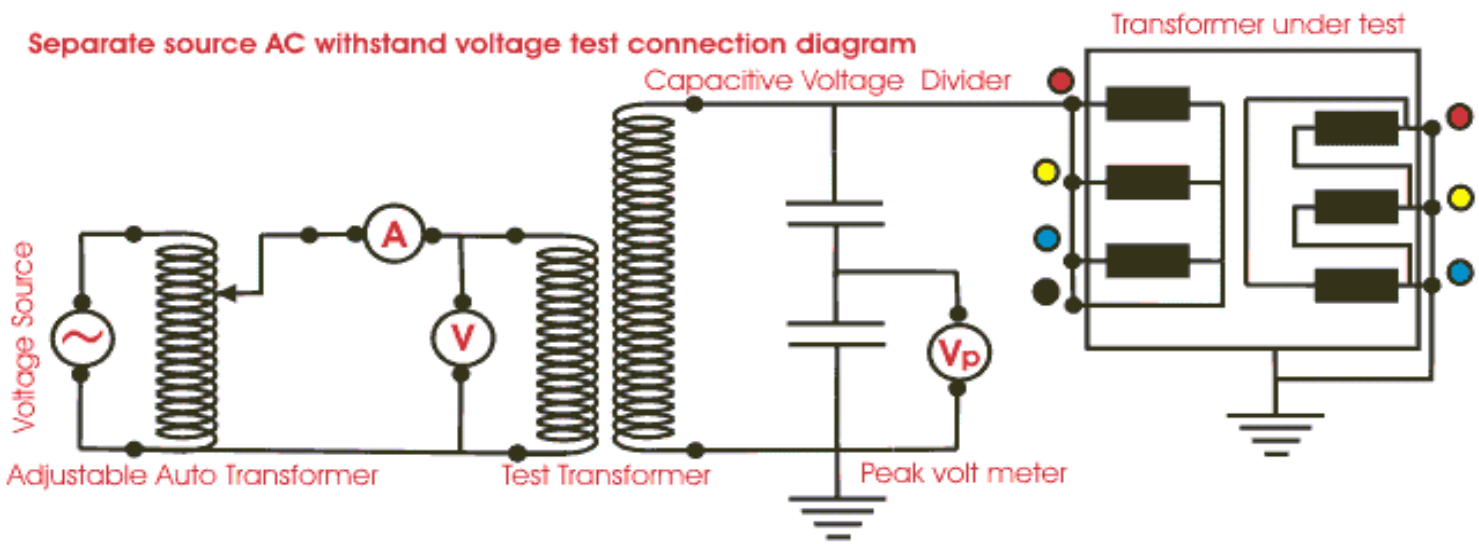

❖ Test Procedure

- Disconnect the transformer completely from the power system.
- Short circuit the winding terminals of the winding under test.
- Connect the high voltage AC supply from a separate source to the winding.
- Ground the other windings and transformer tank.
- Gradually increase the voltage to the specified test value.
- Maintain the voltage for 1 minute.
- Observe whether there is insulation failure, flashover, or abnormal current.
- After the test, reduce the voltage slowly to zero.

➢ Induced over voltage withstand test

- The Induced Over Voltage Withstand Test is performed to verify the insulation strength between transformer windings and between turns of the same winding. In this test, a high voltage is induced in the winding by applying voltage to another winding.
- To check inter-turn insulation of transformer windings.
- To test insulation between different windings.
- To ensure the transformer can withstand over-voltage conditions during operation.

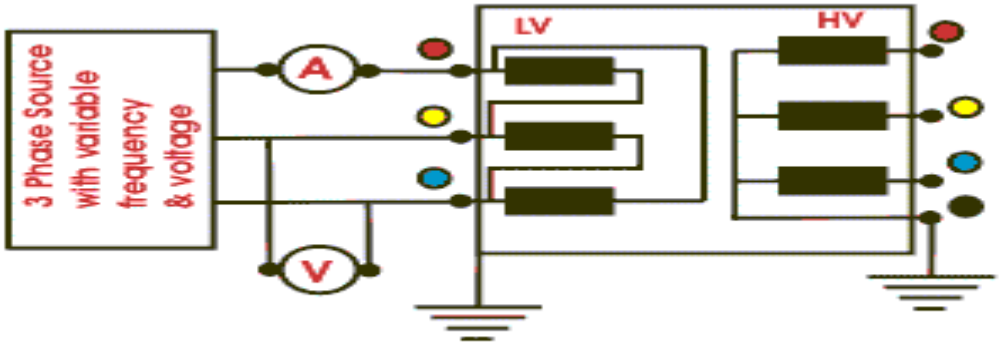

Induced AC voltage test connection diagram

➢ Test Procedure

- Keep the HV winding open-circuited.
- Apply voltage to the LV winding from the AC source.
- Increase the voltage gradually until the required induced voltage appears in the HV winding.
- Maintain the test voltage for about 60 seconds.
- Observe for insulation failure, abnormal sound, or breakdown.
- Reduce the voltage slowly after completion of the test.

➢ The purpose of using double frequecy is to avoid excess excitation current during test .

➢ Test frequency exceed twice the rated frequency of transformer the duration of the test shall be (120xF/Test frequency)Sec. but not less than 15 Sec this is know as flash test.

➢ Lightening impulse test

➢ The Lightning Impulse Test is a dielectric test performed on a transformer to check its ability to withstand high voltage surges caused by lightning strikes or switching operations

1. To verify the insulation strength of transformer windings against lightning surges.
2. To check insulation between winding and earth.
3. To ensure the transformer can safely withstand transient over-voltages.

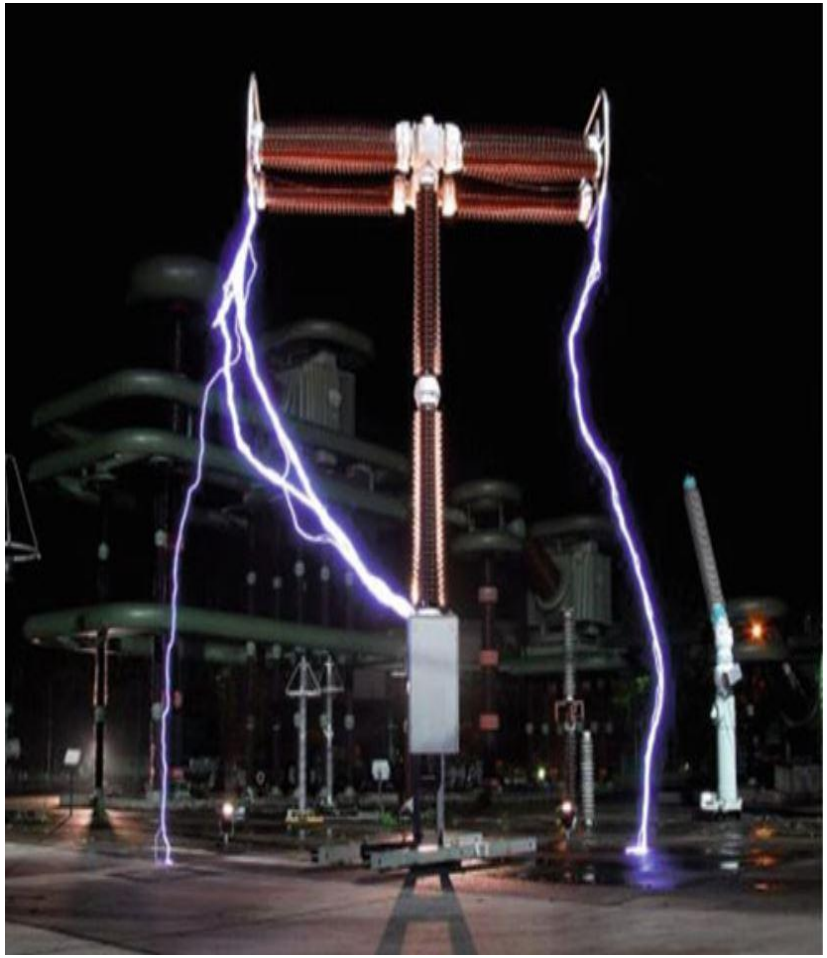

➢ Procedure

- Disconnect the transformer from the power system.
- Connect the impulse generator to the transformer terminal under test.
- Ground the other terminals and transformer tank.
- Apply a standard lightning impulse voltage.
- Record the voltage wave using an oscilloscope.
- Observe for flashover, insulation failure, or abnormal waveform.
- Several impulse shots are applied according to testing standards.

➢ Turns Ratio Test

- The Turns Ratio Test (TTR) is performed to verify the ratio of primary winding turns to secondary winding turns in a transformer. This test ensures that the transformer will produce the correct secondary voltage for a given primary voltage.
- This method is used to determine the number of turns of a transformer winding.
- It is suitable for very high voltage ratio transformers.

❖ Turns Ratio Test

- The voltage induced in a coil is proportional to the number of turns.

$$N2/N1=V2/V1$$

$$N1/N2=V1/V2$$

Where:

$N1$= Number of turns in standard coil

$N2$= Number of turns in transformer coil under test

V1 = Induced voltage in standard coil

$V2$ = Induced voltage in test coil

Circuit Diagram

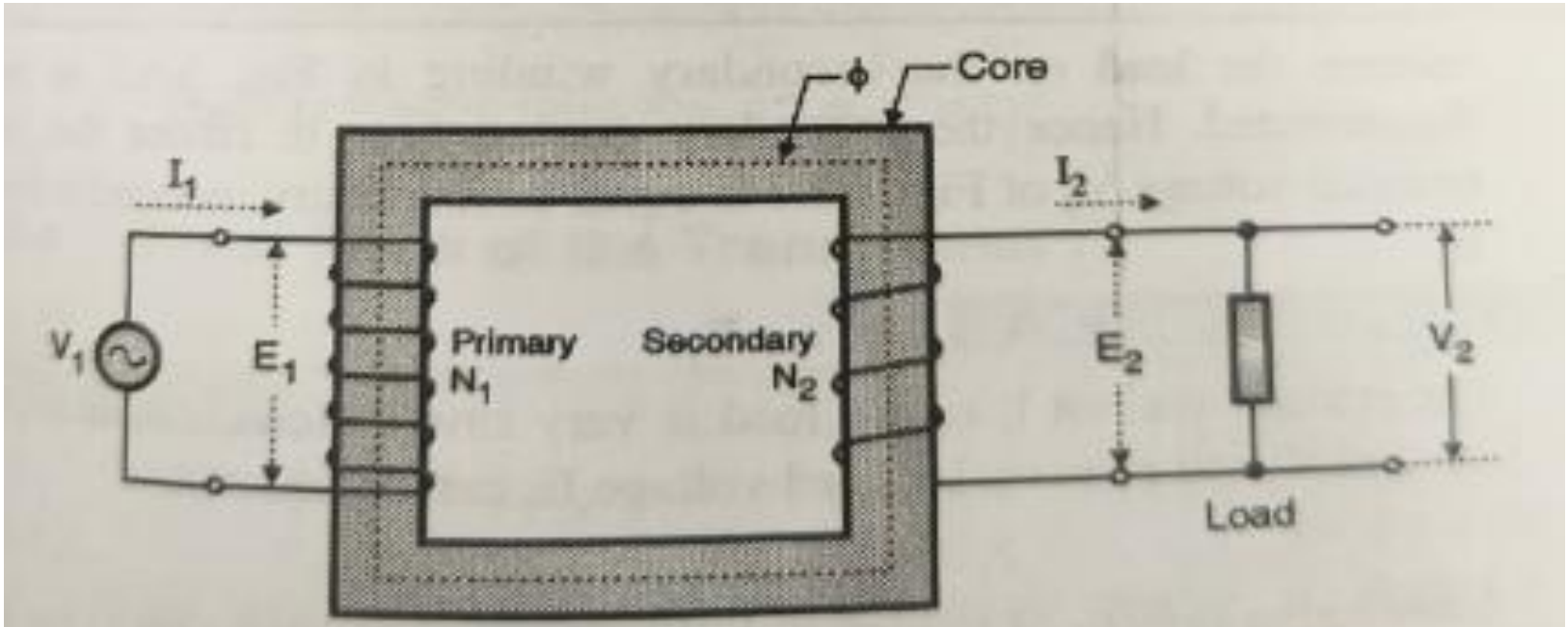

(A-770) **Fig. 3.6.1 : Elementary single phase transformer**

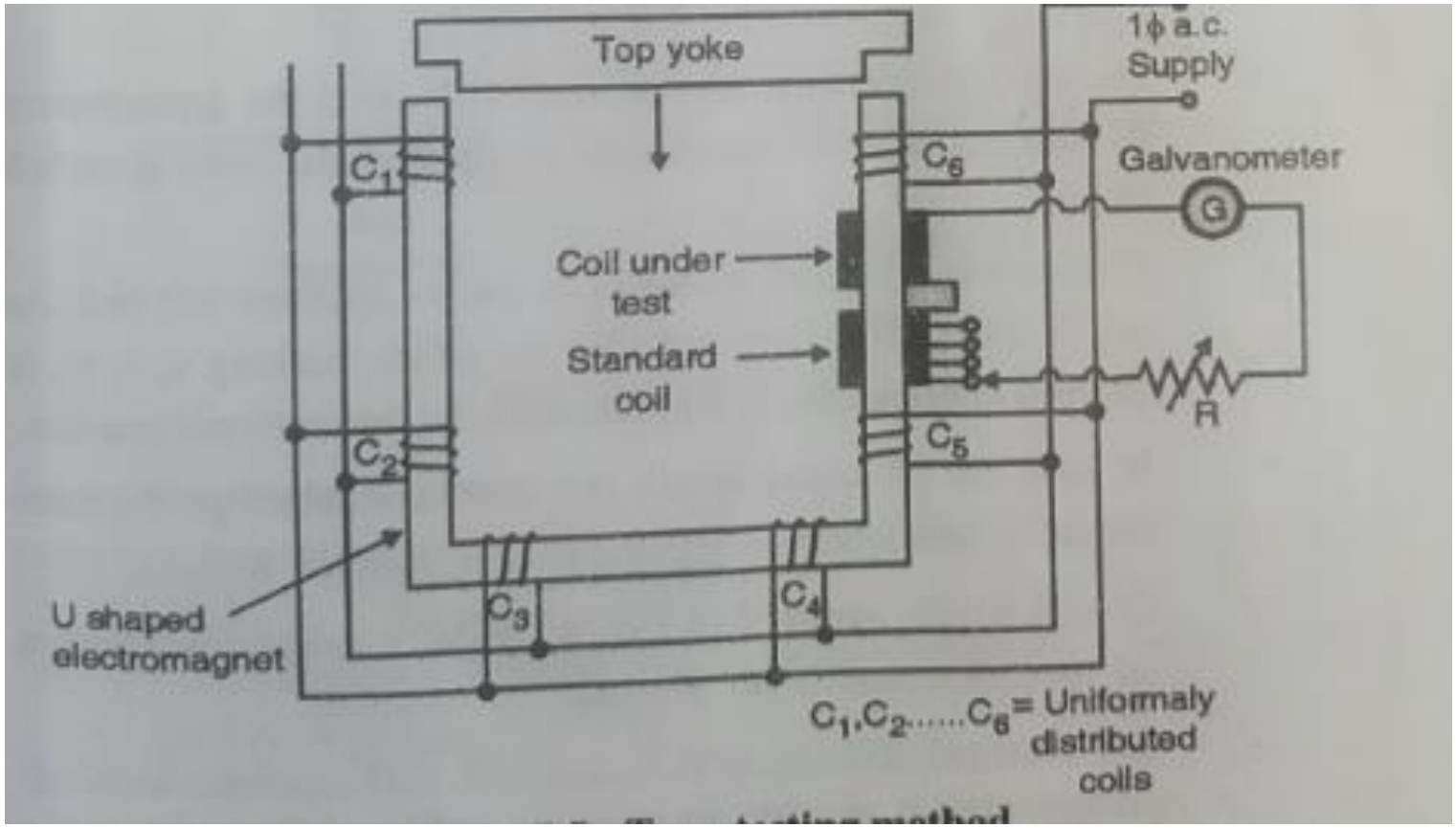
Top yoke
1ϕ a.c.
Supply
Galvanometer
G
C_1
C_2
C_3
C_4
C_5
C_6
Coil under
test
Standard
coil
R
U shaped
electromagnet
$C_1, C_2 \ldots\ldots C_6$ = Uniformaly
distributed
coils

- When single-phase AC supply is given to coils C_1 to C_6, they produce a uniform alternating magnetic flux in the U-shaped electromagnet.
- This alternating flux passes through the magnetic core and links both:
  - the standard coil, and
  - the transformer coil under test.
- Due to this flux, EMF is induced in both coils according to Faraday's law.
- The coils are connected so that their induced EMFs act in opposite directions.
- The tapping of the standard coil is adjusted until the galvanometer shows zero deflection.
- At zero deflection:
  - The induced voltages in both coils become equal.
  - The number of turns of the transformer coil becomes equal to the selected tapping turns of the standard coil.

❖ Transformer Oil Testing

- Transformer oil testing is done to check the **dielectric strength (insulating property)** of the oil used in power transformers. Good insulation oil prevents **electrical breakdown and internal faults**.

❖ The oil testing apparatus consists of the following parts:

- **Oil Test Cell**
  - A glass or insulating container filled with transformer oil sample.
- **Electrodes**
  - Two spherical or mushroom-shaped electrodes are placed inside the oil.
  - The **gap between electrodes is usually 2.5 mm**.
- **Step-Up Transformer**
  - Used to increase the voltage gradually during the test.
- **Voltmeter**
  - Measures the voltage applied to the electrodes.
- **Control Unit**
  - Allows gradual increase of voltage.

❖ Circuit Diagram

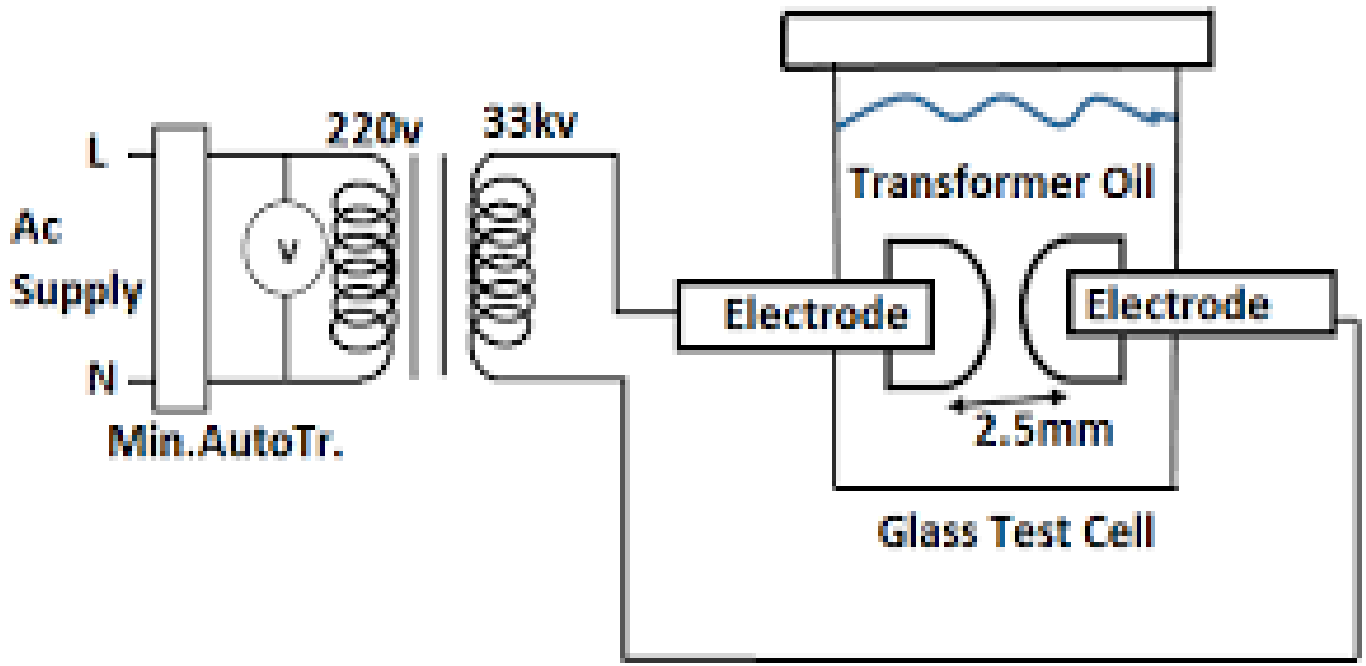

Fig(1)BDV or Dielectric Strength Test of Transformer Oil

❖ Working

- The oil sample taken from the transformer is poured into the oil test cell.
- Two electrodes are placed in the oil with a fixed gap of about 2.5 mm.
- An AC voltage is applied across the electrodes through a step-up transformer.
- The voltage is increased gradually at a constant rate.
- At a certain voltage, the oil breaks down and a spark occurs between the electrodes.
- The voltage at which the spark occurs is called the Breakdown Voltage (BDV).
- The test is usually repeated 5–6 times, and the average value is taken.

❖ MCB

- A Miniature Circuit Breaker (MCB) acts as an automatic safety switch that protects electrical circuits from damage by breaking the circuit during overloads or short circuits. It safeguards wiring and appliances from fire hazards, automatically trips without manual intervention, and can be easily reset

1. Maintenance of MCB (Miniature Circuit Breaker)

1. Visual Inspection

- Check for physical damage, cracks, or burn marks on the MCB body.
- Ensure terminals are tight and there is no loose connection.
- Look for signs of overheating or discoloration.

2. Cleaning

- Remove dust, dirt, and moisture using a dry cloth or air blower.
- Dust accumulation can cause insulation failure.

3. Mechanical Operation Check

- Turn the MCB ON and OFF manually to ensure smooth operation.
- The switch should not be loose or stuck.

4. Contact Condition

- Check contacts for burning, pitting, or carbon deposits.
- If contacts are badly damaged, the MCB should be replaced.

5. Electrical Testing

- Check tripping operation by applying overload conditions.
- Ensure the MCB trips properly during fault conditions.

Moulded Case Circuit Breaker (MCCB)

A MCCB is an electrical protection device designed to safeguard low-voltage circuits (up to 2500A) against overload, short circuits, and ground faults. It operates by automatically breaking the current in fault conditions using thermal-magnetic or microprocessor-based tripping mechanisms, and provides manual disconnection.

2. Maintenance of MCCB (Moulded Case Circuit Breaker)

1. Visual Inspection

- Check the **outer casing for cracks or damage**.
- Inspect **terminals, cable lugs, and connections** for tightness.

2. Cleaning

- Clean the MCCB using **dry compressed air**.
- Remove **dust and moisture** from the breaker and panel.

3. Mechanical Operation

- Operate the breaker **manually several times** to ensure smooth switching.
- Check **handle movement and locking mechanism**.

4. Contact Inspection

- Open the breaker cover (if maintenance type).
- Inspect **main contacts and arc chutes** for wear or burning.

5. Trip Unit Testing

- Test the **overload and short circuit protection**.
- Verify **thermal and magnetic trip settings**.

6. Insulation Resistance Test

- Measure **insulation resistance between terminals and earth** using a megger.
- Ensure the value is within acceptable limits.