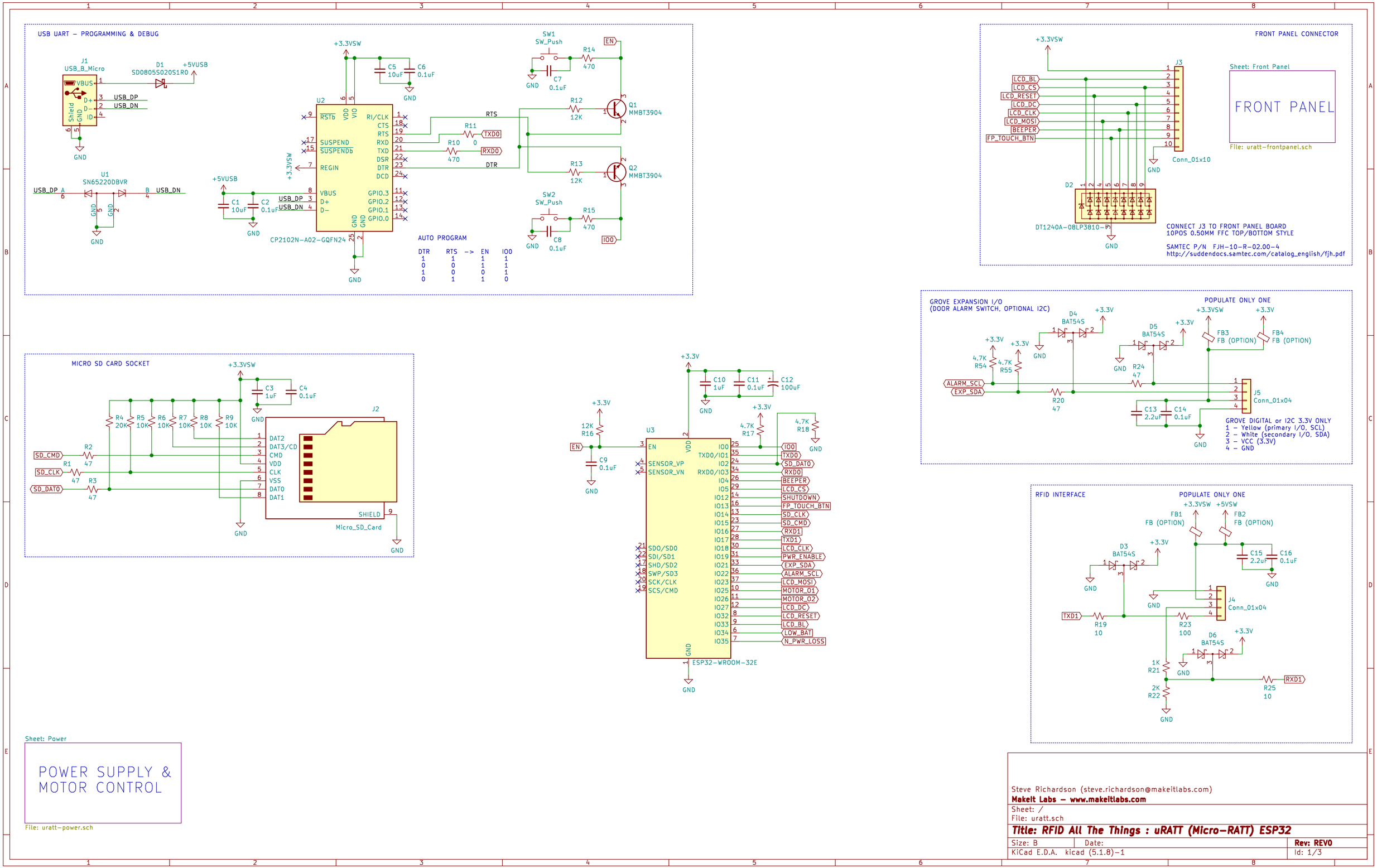
USB UART – PROGRAMMING & DEBUG
J1
USB_B_Micro
D1
SD0805S020S1R0
+5VUSB
USB_DP
USB_DN
U1
SN65220DBVR
U2
CP2102N-A02-GQFN24
+3.3VSW
C5
10uF
C6
0.1uF
C1
10uF
C2
0.1uF
SW1
SW_Push
SW2
SW_Push
R14
470
R15
470
R12
12K
R13
12K
R11
0
R10
470
Q1
MMBT3904
Q2
MMBT3904
C7
0.1uF
C8
0.1uF
EN
IO0
TXD0
RXD0
RTS
DTR
AUTO PROGRAM
DTR RTS -> EN IO0
1 1 1 1
0 0 1 1
1 0 0 1
0 1 1 0
FRONT PANEL CONNECTOR
J3
Conn_01x10
Sheet: Front Panel
FRONT PANEL
File: uratt-frontpanel.sch
LCD_BL
LCD_CS
LCD_RESET
LCD_DC
LCD_CLK
LCD_MOSI
BEEPER
FP_TOUCH_BTN
D2
DT1240A-08LP3810-5
CONNECT J3 TO FRONT PANEL BOARD
10POS 0.50MM FFC TOP/BOTTOM STYLE
SAMTEC P/N FJH-10-R-02.00-4
http://suddendocs.samtec.com/catalog_english/fjh.pdf
GROVE EXPANSION I/O
(DOOR ALARM SWITCH, OPTIONAL I2C)
POPULATE ONLY ONE
D4
BAT54S
D5
BAT54S
FB3
FB (OPTION)
FB4
FB (OPTION)
ALARM_SCL
EXP_SDA
R54
4.7K
R55
4.7K
R20
47
R24
47
C13
2.2uF
C14
0.1uF
J5
Conn_01x04
GROVE DIGITAL or I2C 3.3V ONLY
1 – Yellow (primary I/O, SCL)
2 – White (secondary I/O, SDA)
3 – VCC (3.3V)
4 – GND
MICRO SD CARD SOCKET
J2
Micro_SD_Card
SD_CMD
SD_CLK
SD_DAT0
R1
47
R2
47
R3
47
R4
20K
R5
10K
R6
10K
R7
10K
R8
10K
R9
10K
C3
1uF
C4
0.1uF
DAT2
DAT3/CD
CMD
VDD
CLK
VSS
DAT0
DAT1
SHIELD
U3
ESP32-WROOM-32E
C10
1uF
C11
0.1uF
C12
100uF
C9
0.1uF
12K
R16
4.7K
R17
4.7K
R18
EN
SENSOR_VP
SENSOR_VN
SDO/SD0
SDI/SD1
SHD/SD2
SWP/SD3
SCK/CLK
SCS/CMD
IO0
TXD0/IO1
IO2
RXD0/IO3
IO4
IO5
IO12
IO13
IO14
IO15
IO16
IO17
IO18
IO19
IO21
IO22
IO23
IO25
IO26
IO27
IO32
IO33
IO34
IO35
SHUTDOWN
PWR_ENABLE
LOW_BAT
N_PWR_LOSS
RXD1
TXD1
RFID INTERFACE
POPULATE ONLY ONE
+3.3VSW
+5VSW
FB1
FB (OPTION)
FB2
FB (OPTION)
D3
BAT54S
D6
BAT54S
C15
2.2uF
C16
0.1uF
J4
Conn_01x04
TXD1
R19
10
R23
100
1K
R21
2K
R22
R25
10
RXD1
Sheet: Power
POWER SUPPLY &
MOTOR CONTROL
File: uratt-power.sch
Steve Richardson (steve.richardson@makeitlabs.com)
Makeit Labs – www.makeitlabs.com
Sheet: /
File: uratt.sch
Title: RFID All The Things : uRATT (Micro-RATT) ESP32
Size: B
Date:
Rev: REV0
KiCad E.D.A. kicad (5.1.8)-1
Id: 1/3

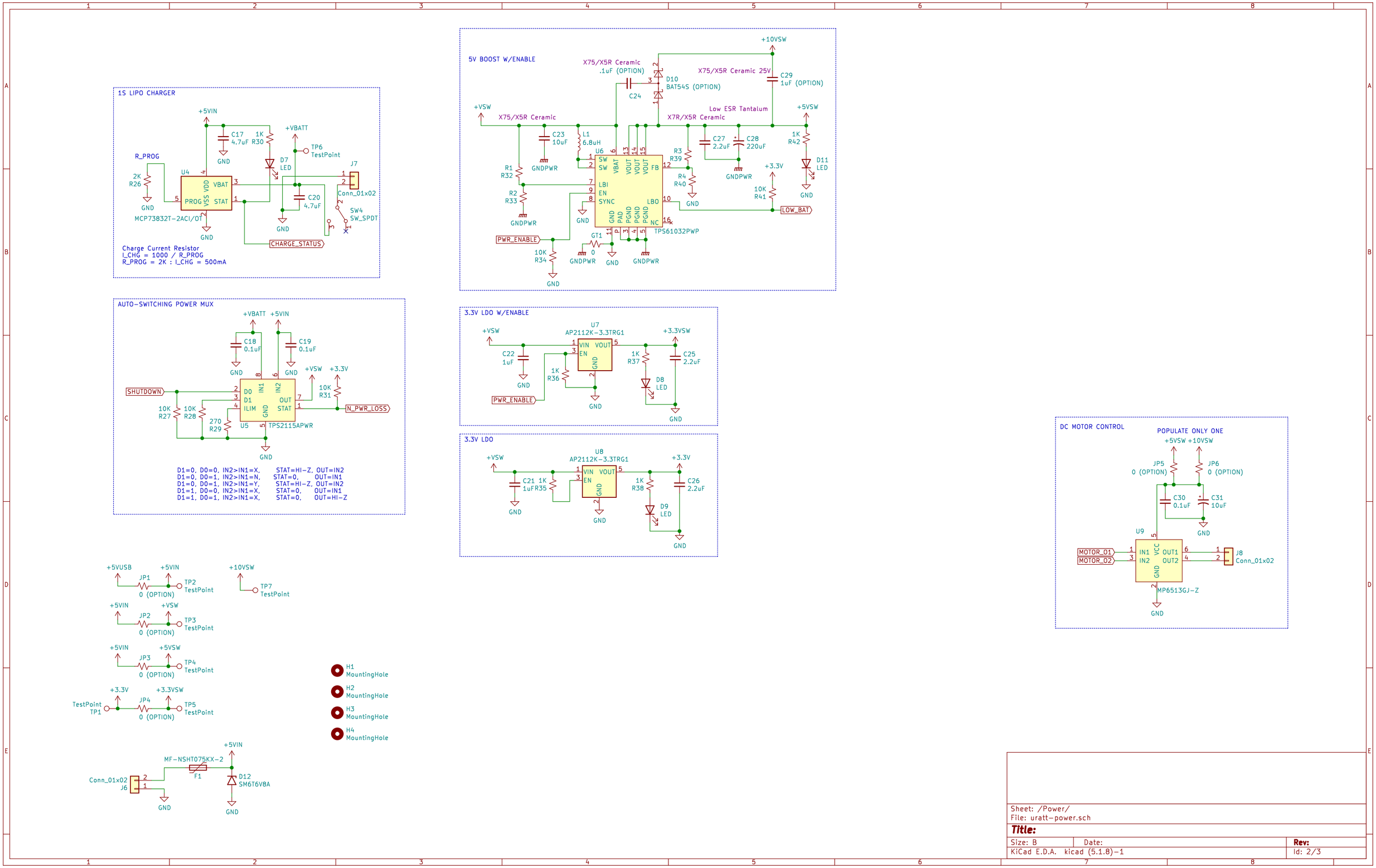

Sheet: /Power/
File: uratt-power.sch

Title:

Size: B	Date:	Rev:
KiCad E.D.A. kicad (5.1.8)-1		Id: 2/3

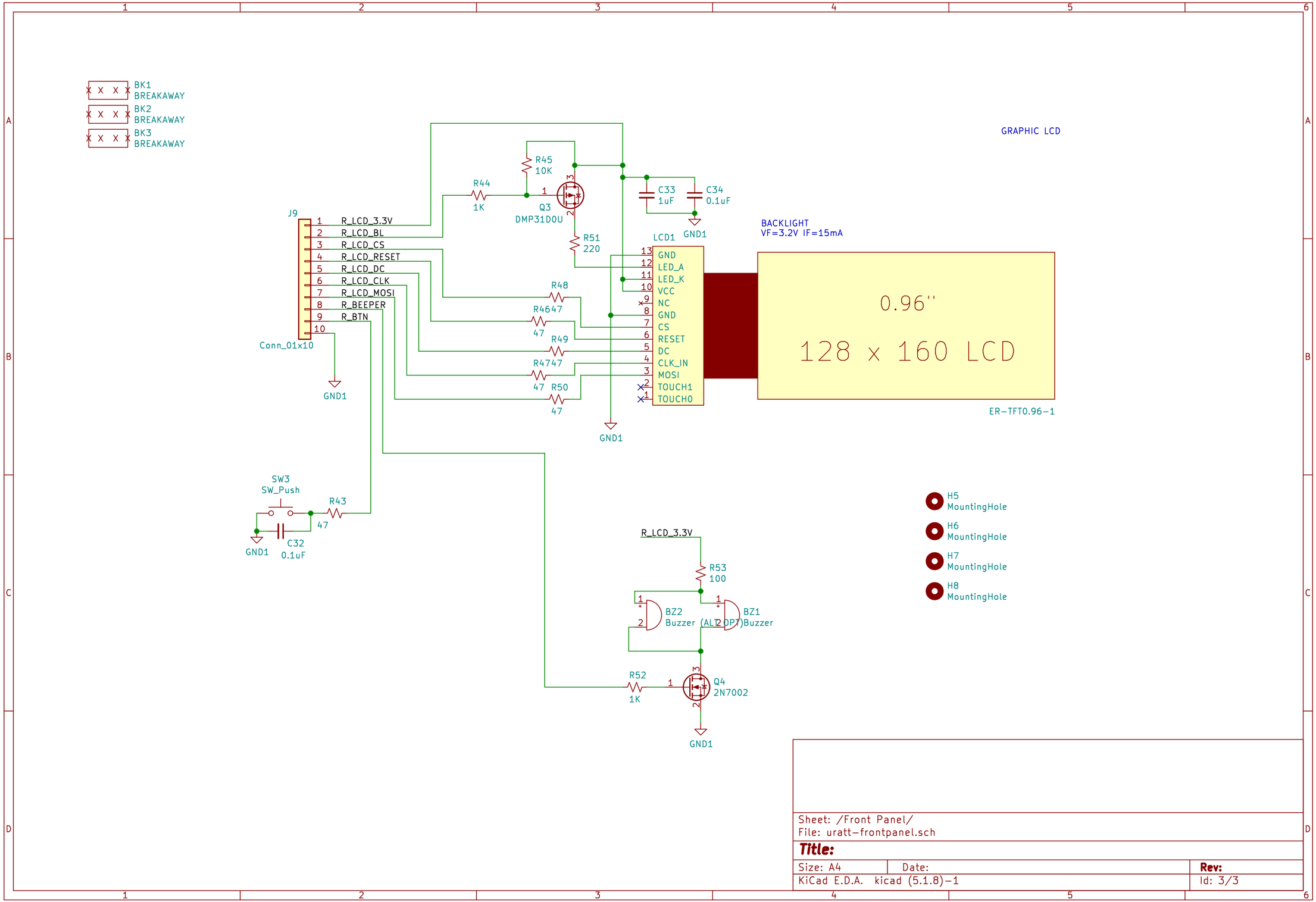

Sheet: /Front Panel/
File: uratt-frontpanel.sch

Title:

Size: A4	Date:	Rev:
KiCad E.D.A. kicad (5.1.8)-1		Id: 3/3