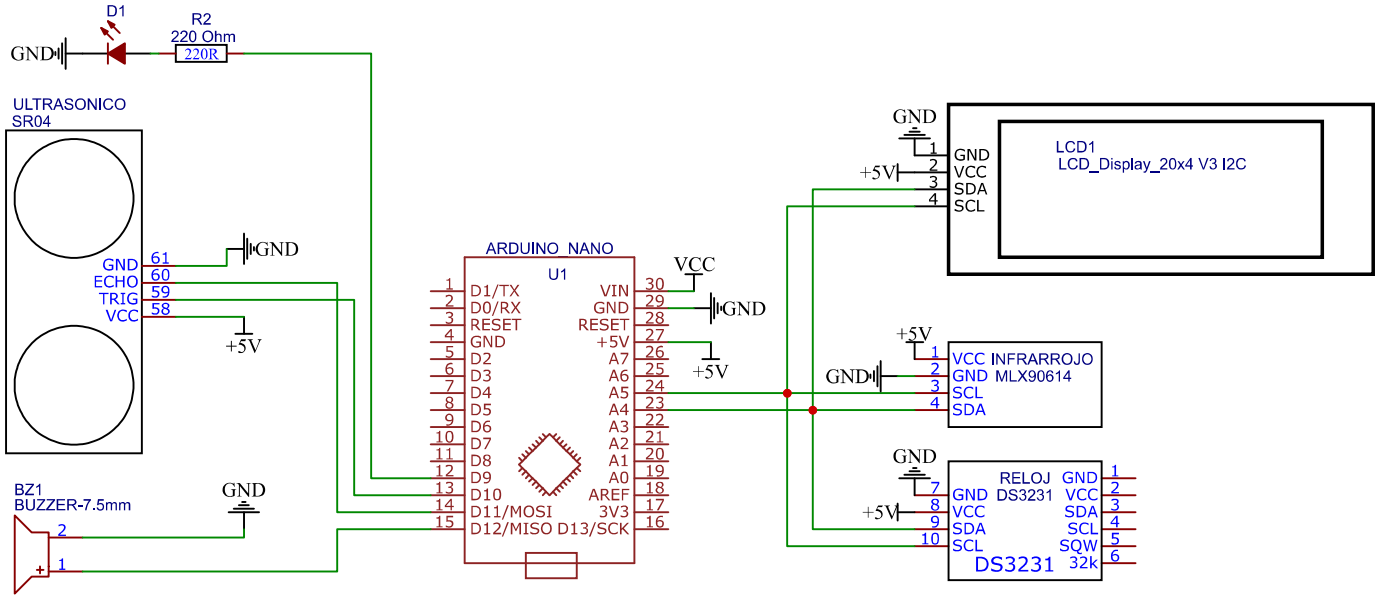

TITLE: Termómetro de Pared		REV: 1.0
MAKER 504	Company: Maker 504	Sheet: 1/1
	Date: 2020-07-03 Drawn By: maker504	