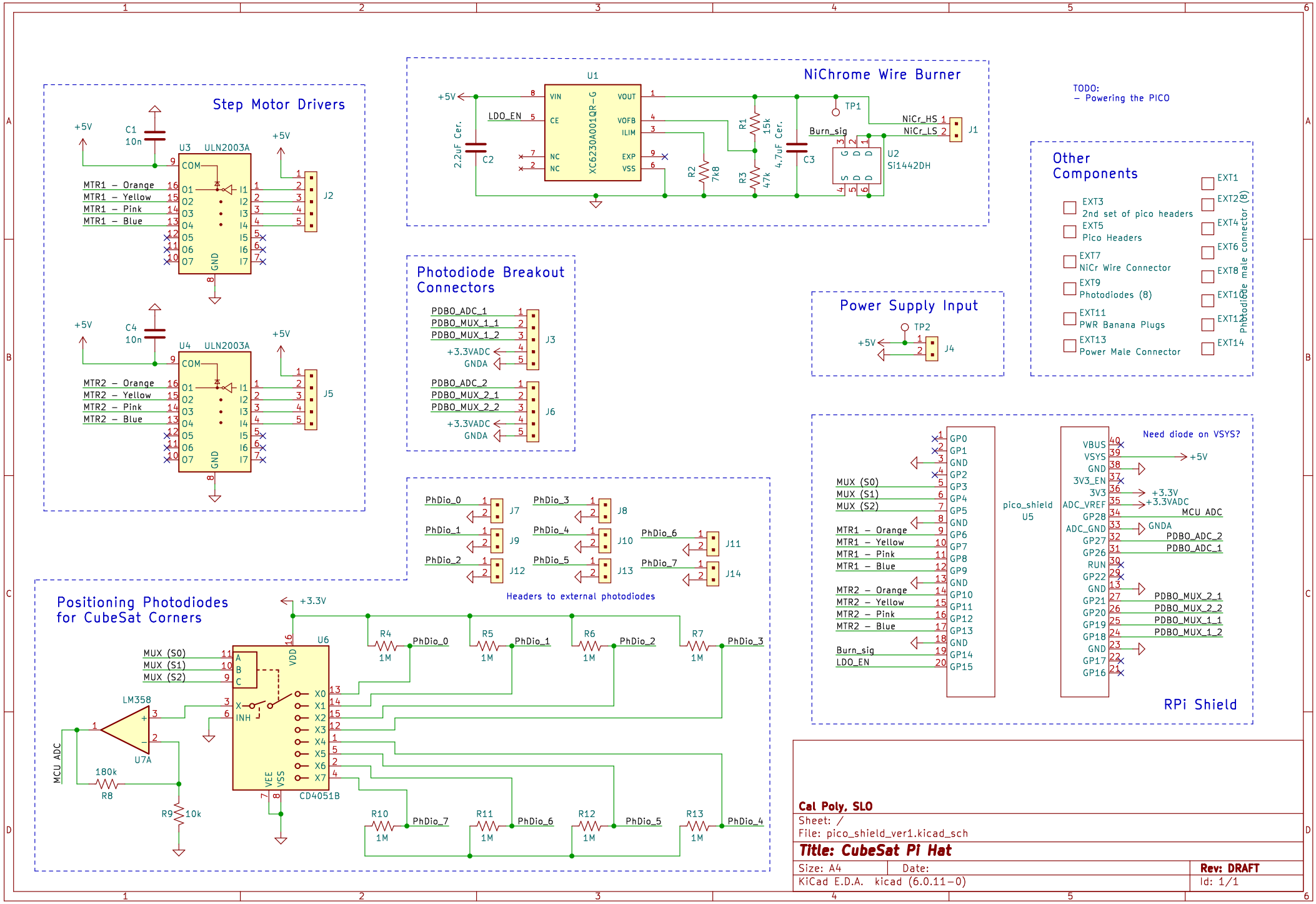
Step Motor Drivers
U3 ULN2003A
U4 ULN2003A
C1 10n
C4 10n
+5V
MTR1 – Orange
MTR1 – Yellow
MTR1 – Pink
MTR1 – Blue
MTR2 – Orange
MTR2 – Yellow
MTR2 – Pink
MTR2 – Blue
J2
J5
NiChrome Wire Burner
U1
XC6230A001QR-G
VIN
CE
NC
VOUT
VOFB
ILIM
EXP
VSS
LDO_EN
2.2uF Cer.
C2
R1 15k
R2 7k8
R3 47k
4.7uF Cer.
C3
TP1
Burn_sig
U2 Si1442DH
NiCr_HS
NiCr_LS
J1
TODO:
– Powering the PICO
Other Components
EXT3 2nd set of pico headers
EXT5 Pico Headers
EXT7 NiCr Wire Connector
EXT9 Photodiodes (8)
EXT11 PWR Banana Plugs
EXT13 Power Male Connector
EXT1
EXT2
EXT4
EXT6
EXT8
EXT10
EXT12
EXT14
Photodiode male connector (8)
Photodiode Breakout Connectors
PDBO_ADC_1
PDBO_MUX_1_1
PDBO_MUX_1_2
+3.3VADC
GNDA
J3
PDBO_ADC_2
PDBO_MUX_2_1
PDBO_MUX_2_2
J6
Power Supply Input
TP2
J4
PhDio_0
PhDio_1
PhDio_2
PhDio_3
PhDio_4
PhDio_5
PhDio_6
PhDio_7
J7
J9
J12
J8
J10
J13
J11
J14
Headers to external photodiodes
Positioning Photodiodes for CubeSat Corners
+3.3V
U6
CD4051B
MUX (S0)
MUX (S1)
MUX (S2)
LM358
U7A
MCU ADC
180k
R8
R9 10k
R4 1M
R5 1M
R6 1M
R7 1M
R10 1M
R11 1M
R12 1M
R13 1M
pico_shield
U5
Need diode on VSYS?
MUX (S0)
MUX (S1)
MUX (S2)
MTR1 – Orange
MTR1 – Yellow
MTR1 – Pink
MTR1 – Blue
MTR2 – Orange
MTR2 – Yellow
MTR2 – Pink
MTR2 – Blue
Burn_sig
LDO_EN
VBUS
VSYS
3V3_EN
3V3
ADC_VREF
ADC_GND
MCU ADC
PDBO_ADC_2
PDBO_ADC_1
PDBO_MUX_2_1
PDBO_MUX_2_2
PDBO_MUX_1_1
PDBO_MUX_1_2
RPi Shield
Cal Poly, SLO
Sheet: /
File: pico_shield_ver1.kicad_sch
Title: CubeSat Pi Hat
Size: A4
Date:
Rev: DRAFT
KiCad E.D.A. kicad (6.0.11-0)
Id: 1/1