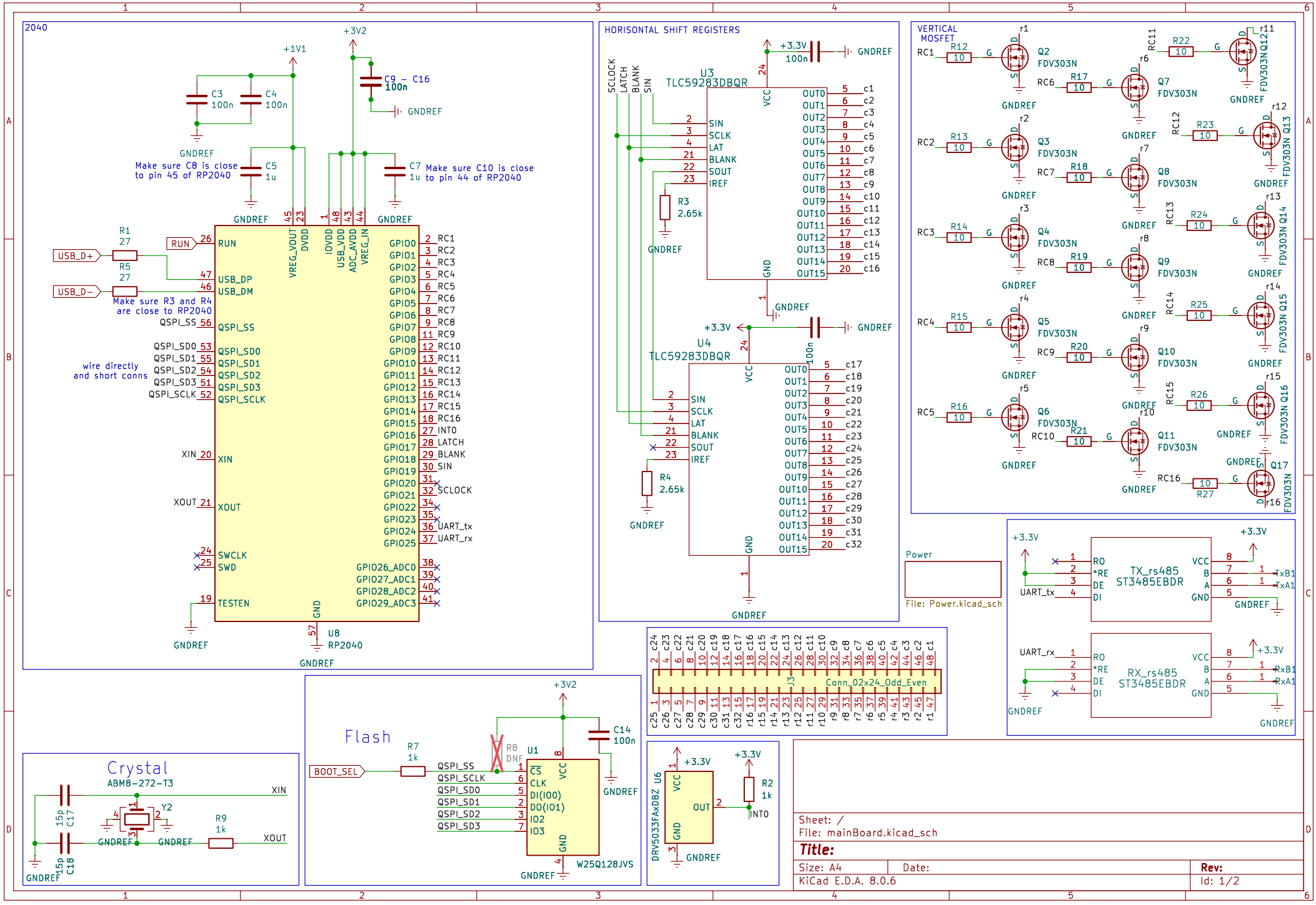
2040
+1V1
+3V2
C3 100n
C4 100n
C9 – C16 100n
GNDREF
Make sure C8 is close to pin 45 of RP2040
C5 1u
C7 1u
Make sure C10 is close to pin 44 of RP2040
R1 27
R5 27
USB_D+
USB_D−
Make sure R3 and R4 are close to RP2040
wire directly and short conns
U8 RP2040
HORISONTAL SHIFT REGISTERS
U3 TLC59283DBQR
U4 TLC59283DBQR
SCLOCK
LATCH
BLANK
SIN
R3 2.65k
R4 2.65k
+3.3V
VERTICAL MOSFET
Q2 FDV303N
Q3 FDV303N
Q4 FDV303N
Q5 FDV303N
Q6 FDV303N
Q7 FDV303N
Q8 FDV303N
Q9 FDV303N
Q10 FDV303N
Q11 FDV303N
Q12 FDV303N
Q13 FDV303N
Q14 FDV303N
Q15 FDV303N
Q16 FDV303N
Q17 FDV303N
Power
File: Power.kicad_sch
TX_rs485 ST3485EBDR
RX_rs485 ST3485EBDR
UART_tx
UART_rx
Conn_02x24_Odd_Even
Flash
W25Q128JVS
BOOT_SEL
R7 1k
R8 DNF
C14 100n
Crystal
ABM8-272-T3
Y2
C17 15p
C18 15p
R9 1k
XIN
XOUT
DRV5033FAxDBZ U6
R2 1k
INT0
Sheet: /
File: mainBoard.kicad_sch
Title:
Size: A4
Date:
Rev:
KiCad E.D.A. 8.0.6
Id: 1/2

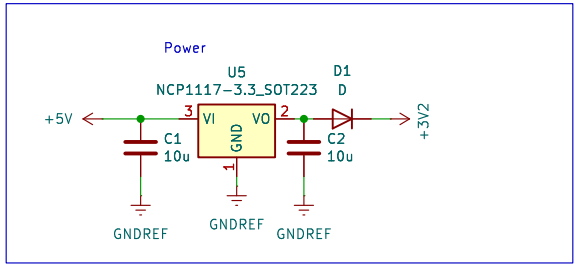

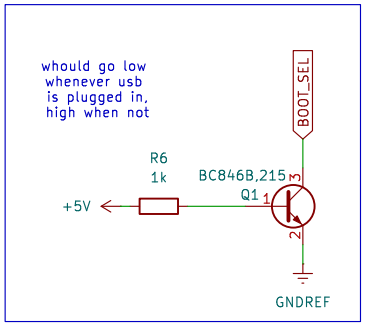

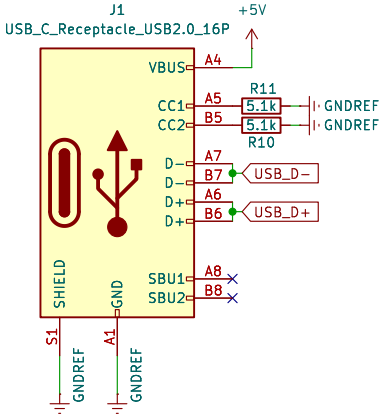

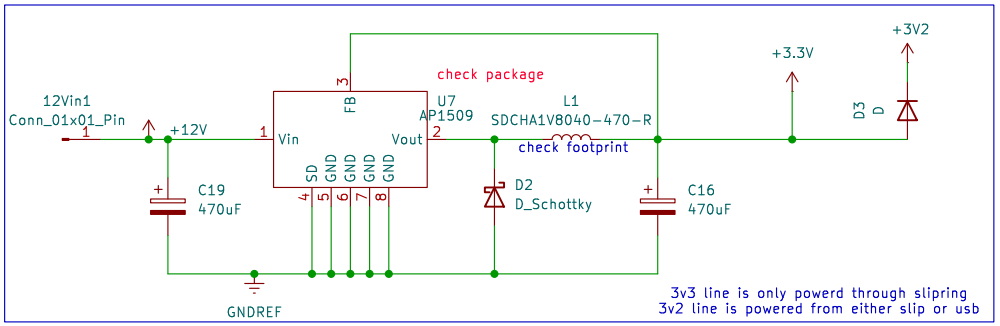

Sheet: /Power/
File: Power.kicad_sch

Title:

Size: A4	Date:	Rev:
KiCad E.D.A. 8.0.6		Id: 2/2