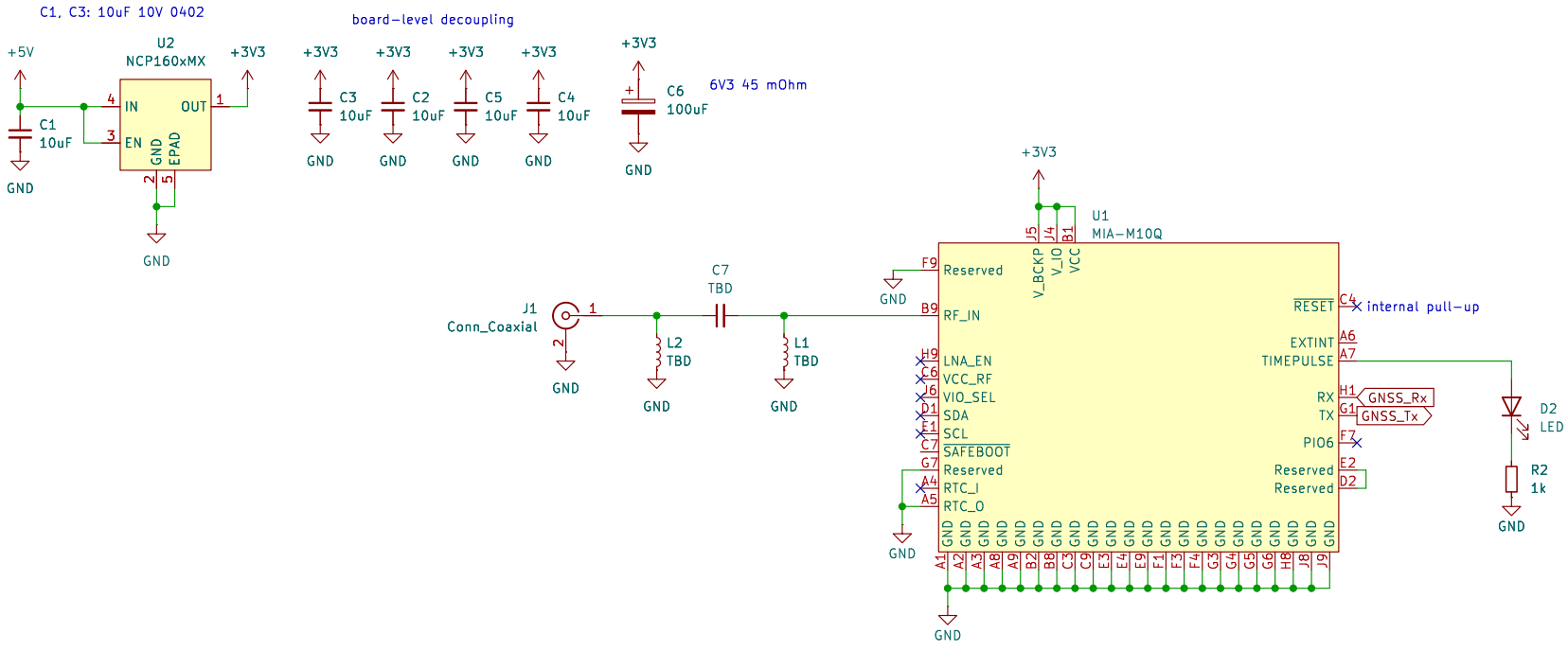

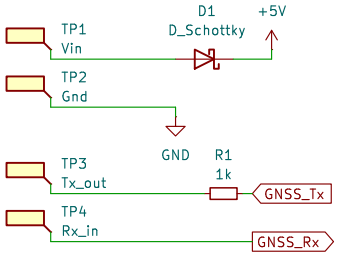

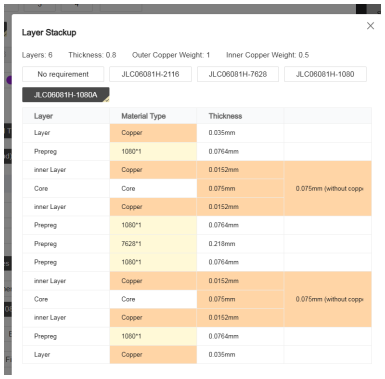

Layer Stackup

Layers: 6 Thickness: 0.8 Outer Copper Weight: 1 Inner Copper Weight: 0.5

No requirement | JLC06081H-2116 | JLC06081H-7628 | JLC06081H-1080

JLC06081H-1080A

Layer	Material Type	Thickness	
Layer	Copper	0.035mm	
Prepreg	1080*1	0.0764mm	
inner Layer	Copper	0.0152mm	
Core	Core	0.075mm	0.075mm (without copp
inner Layer	Copper	0.0152mm	
Prepreg	1080*1	0.0764mm	
Prepreg	7628*1	0.218mm	
Prepreg	1080*1	0.0764mm	
inner Layer	Copper	0.0152mm	
Core	Core	0.075mm	0.075mm (without copp
inner Layer	Copper	0.0152mm	
Prepreg	1080*1	0.0764mm	
Layer	Copper	0.035mm	

Sheet: /
File: PicoM10_bld.kicad_sch

Title:

Size: A4	Date:	Rev:
KiCad E.D.A. 8.0.4		Id: 1/1