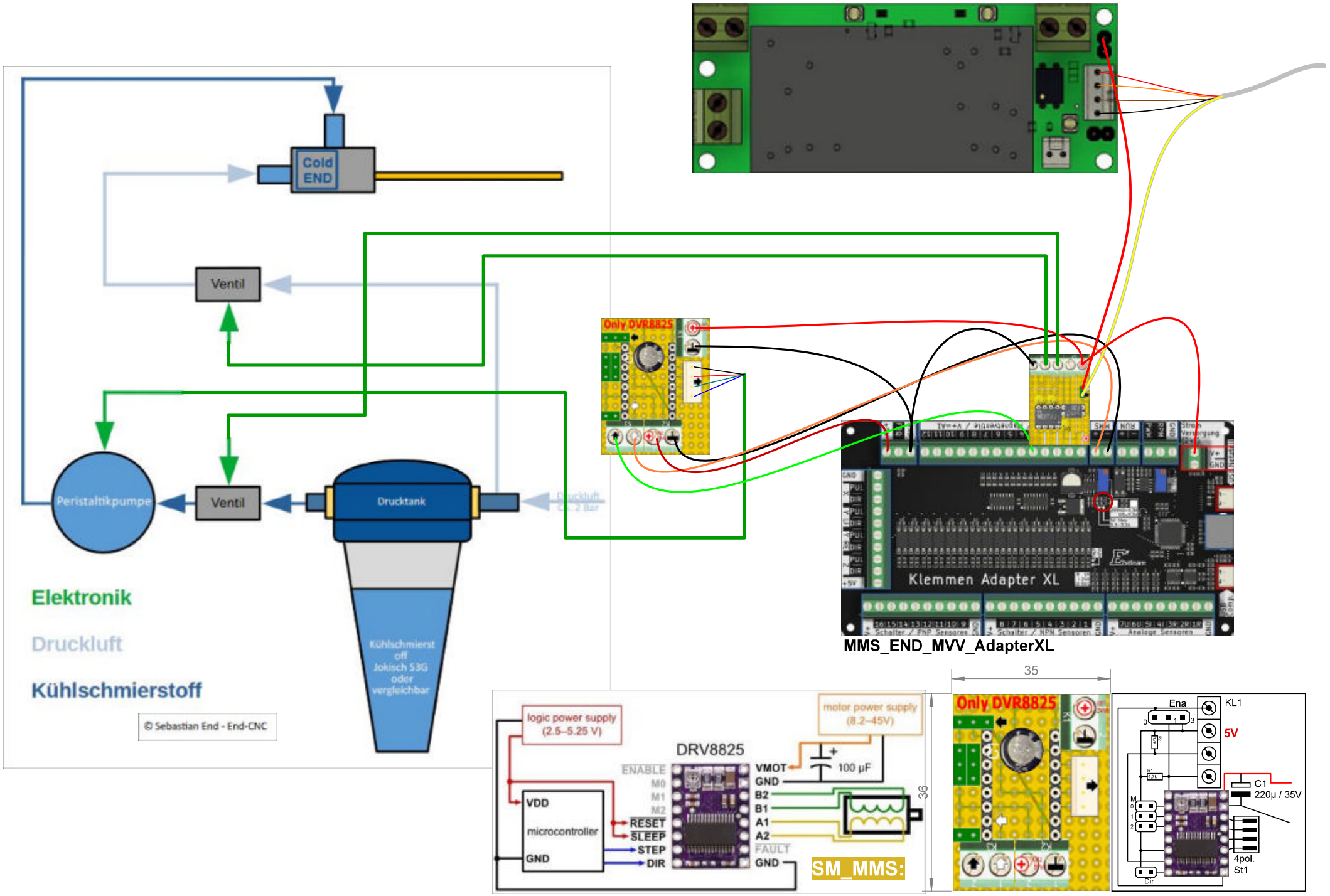
Cold END
Ventil
Peristaltikpumpe
Ventil
Drucktank
Druckluft
Kühlschmierstoff
© Sebastian End - End-CNC
Only DVR8825
Klemmen Adapter XL
MMS_END_MVV_AdapterXL
logic power supply (2.5–5.25 V)
motor power supply (8.2–45V)
DRV8825
ENABLE
M0
M1
M2
RESET
SLEEP
STEP
DIR
VMOT
GND
B2
B1
A1
A2
FAULT
GND
100 µF
VDD
microcontroller
GND
SM_MMS:
35
36
Only DVR8825
Ena
KL1
5V
C1
220µ / 35V
4pol.
St1
Dir

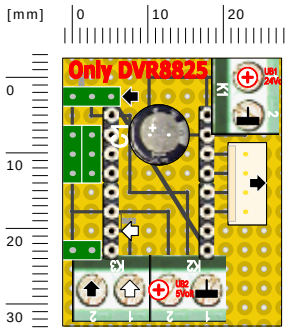

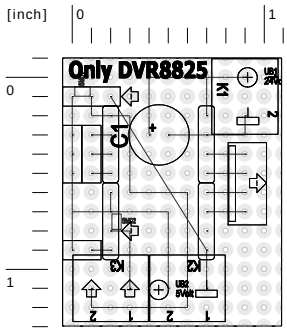

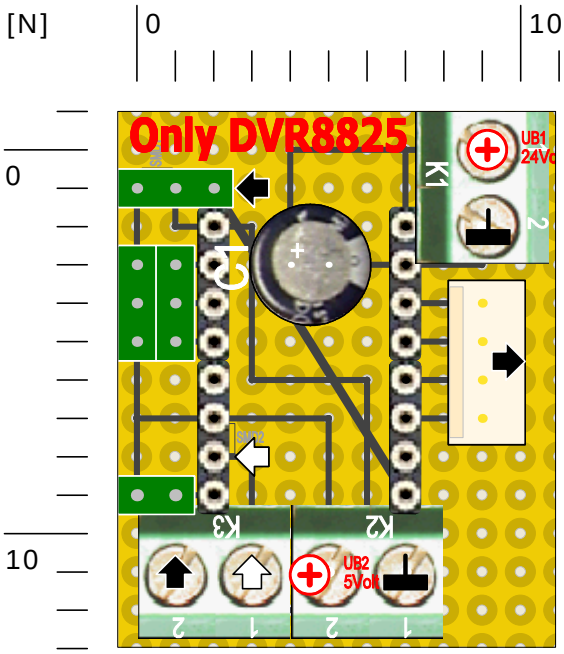

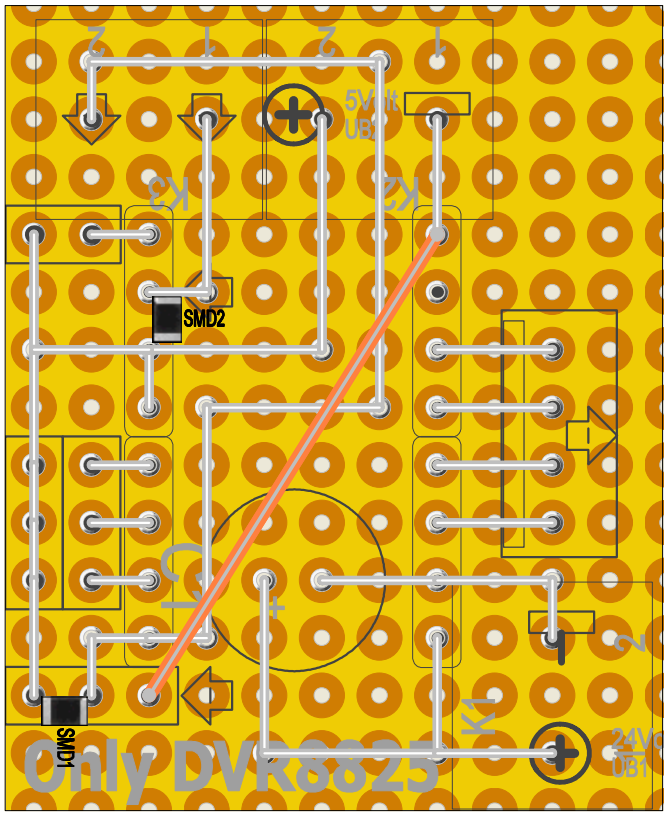

Projekt: estlccam_mms_xl [SM_MMS_Driver]
Abmessungen: 1,14 x 1,40 inch

13.05.2025
11:43:51
Blatt 1 / 1

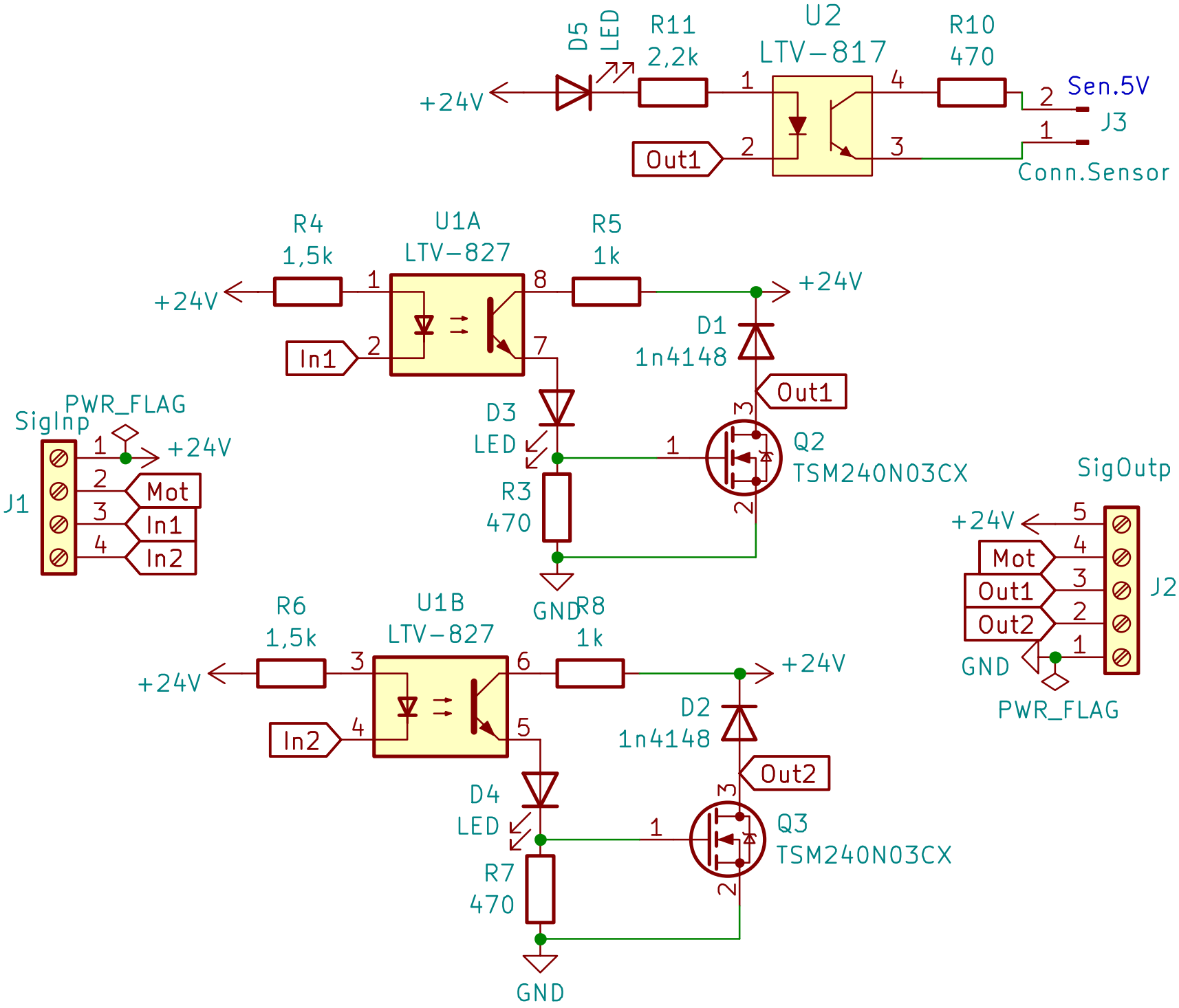
D5
LED
R11
2,2k
U2
LTV-817
R10
470
+24V
Sen.5V
J3
Out1
Conn.Sensor
R4
1,5k
U1A
LTV-827
R5
1k
+24V
D1
1n4148
In1
Out1
PWR_FLAG
SigInp
D3
LED
Q2
TSM240N03CX
J1
Mot
In1
In2
R3
470
SigOutp
GND
R8
1k
R6
1,5k
U1B
LTV-827
J2
Out2
D2
1n4148
In2
D4
LED
Q3
TSM240N03CX
R7
470
GND

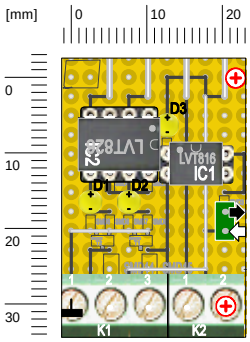

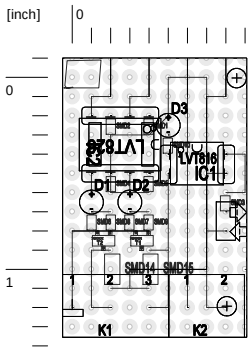

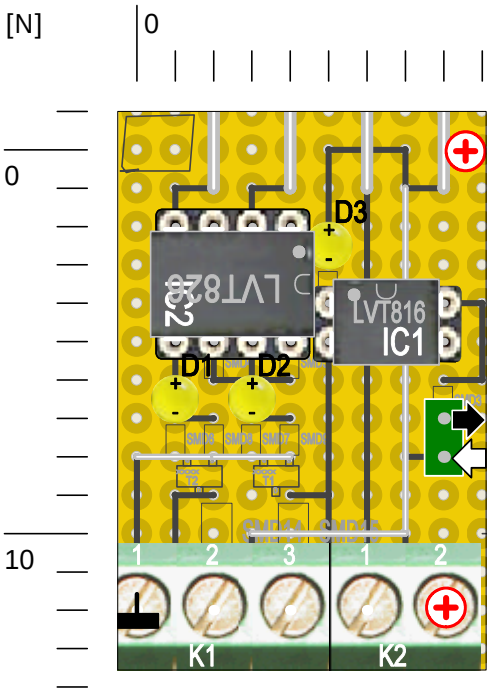

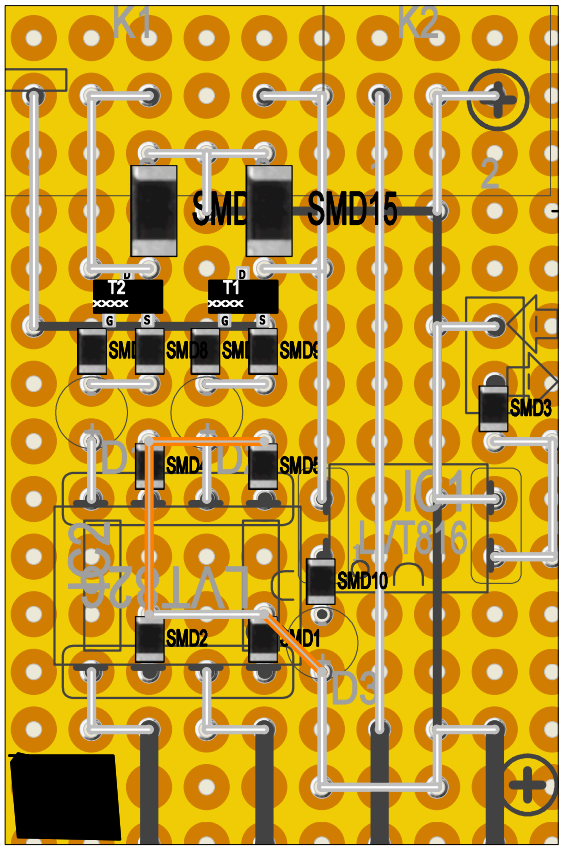

Projekt: estlccam_mms_xl [MV-Verstärker]
Abmessungen: 24,40 x 37,00 mm

13.05.2025
11:44:47
Blatt 1 / 1