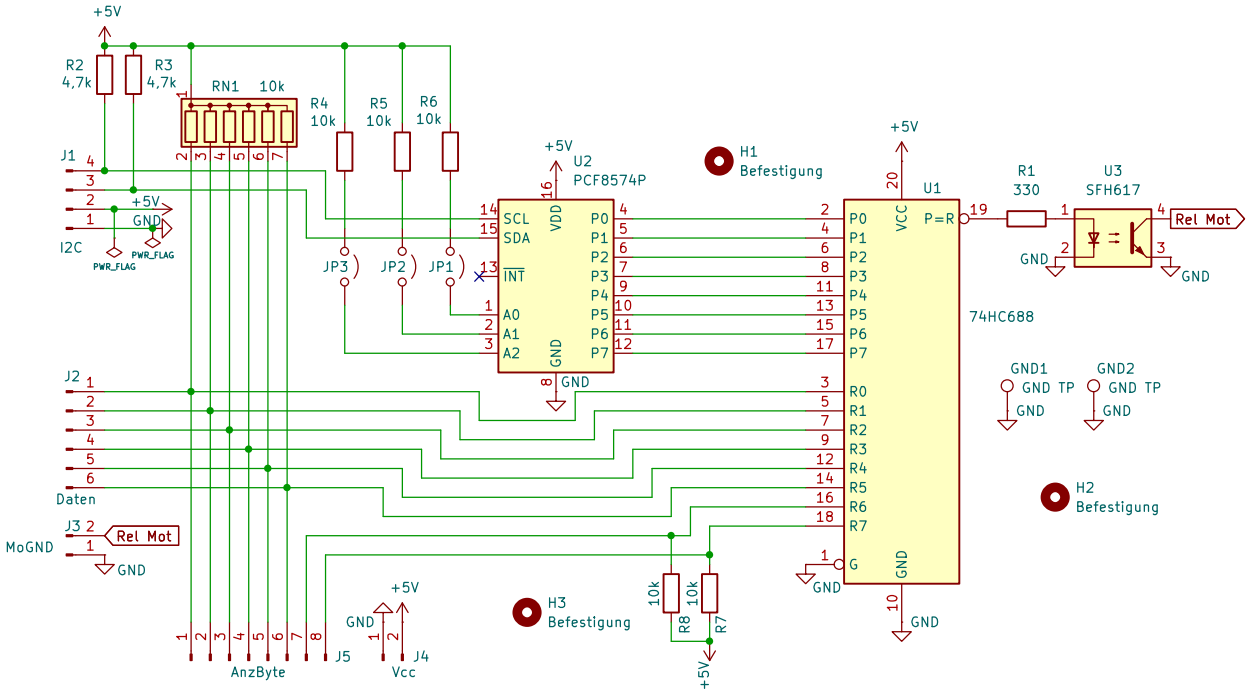

Sheet: /
File: Anzeige_Simon.kicad_sch

Title: ADTrans Anzeige Steuerung

Size: A4	Date: 2026-08-21	**Rev: 1.5**
KiCad E.D.A. 10.0.5		Id: 1/1

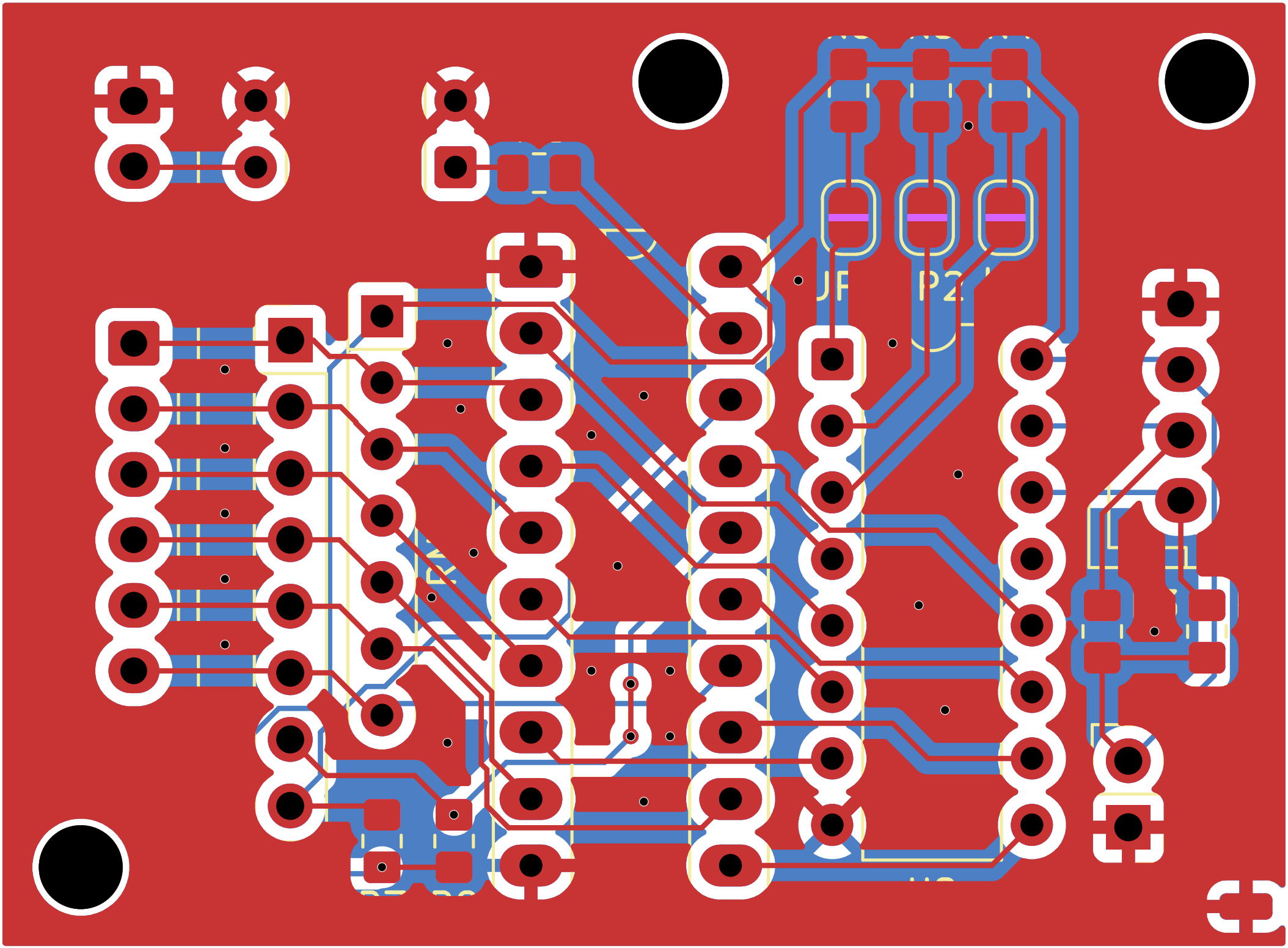

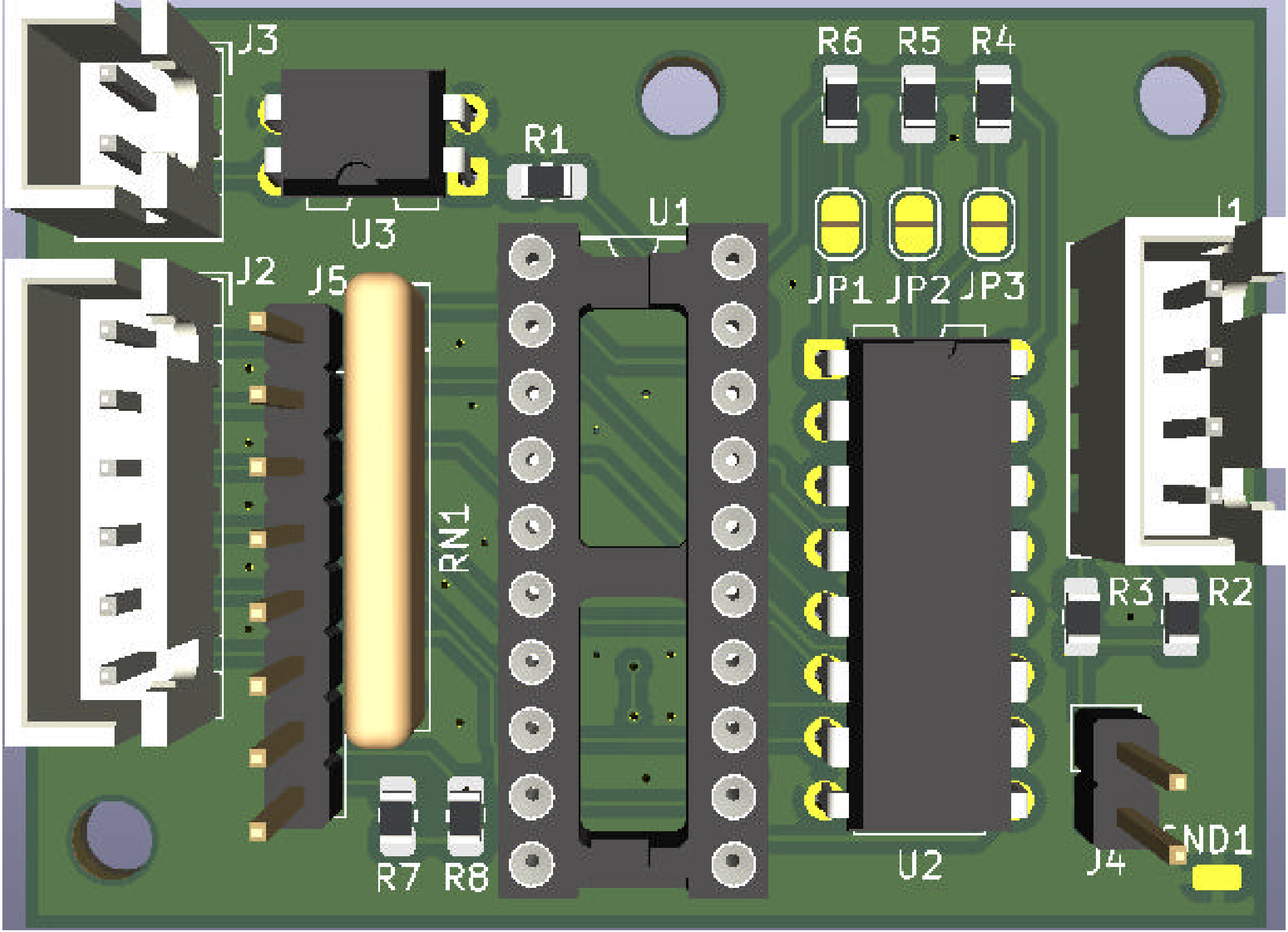
J3
R6
R5
R4
R1
U1
U3
J1
J2
J5
JP1
JP2
JP3
RN1
R3
R2
R7
R8
U2
J4
GND1