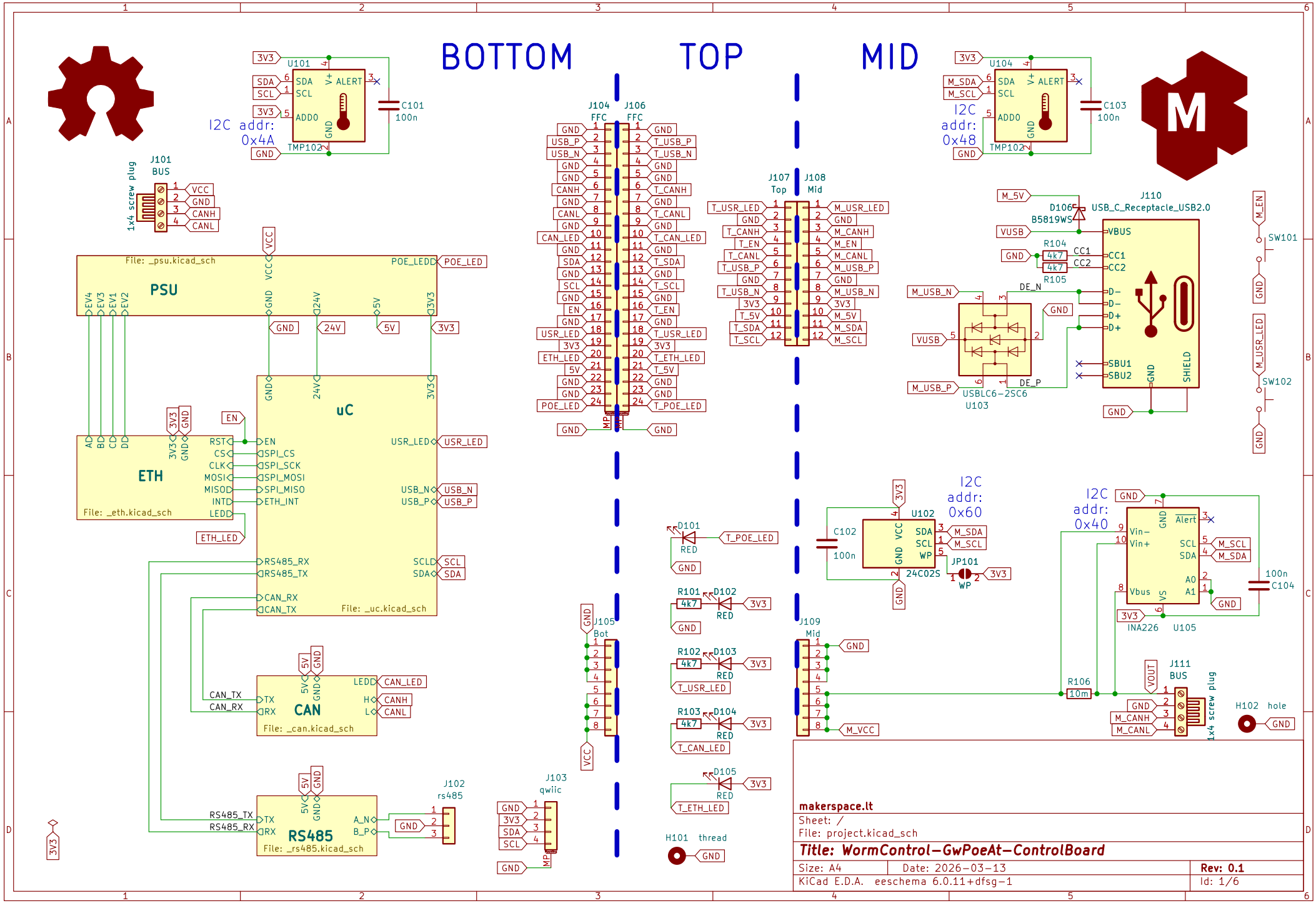
BOTTOM
TOP
MID
U101
TMP102
I2C addr: 0x4A
C101 100n
U104
TMP102
I2C addr: 0x48
C103 100n
J101 BUS
1x4 screw plug
J104 FFC
J106 FFC
J107 Top
J108 Mid
J110 USB_C_Receptacle_USB2.0
D106 B5819WS
R104 4k7
R105 4k7
U103 USBLC6-2SC6
SW101
SW102
File: _psu.kicad_sch
PSU
File: _eth.kicad_sch
ETH
File: _uc.kicad_sch
uC
File: _can.kicad_sch
CAN
File: _rs485.kicad_sch
RS485
J102 rs485
J103 qwiic
J105 Bot
J109 Mid
D101 RED
R101 4k7
D102 RED
R102 4k7
D103 RED
R103 4k7
D104 RED
D105 RED
H101 thread
C102 100n
U102 24C02S
JP101 WP
I2C addr: 0x60
I2C addr: 0x40
INA226 U105
C104 100n
R106 10m
J111 BUS
1x4 screw plug
H102 hole
makerspace.lt
Sheet: /
File: project.kicad_sch
Title: WormControl-GwPoeAt-ControlBoard
Size: A4
Date: 2026-03-13
Rev: 0.1
KiCad E.D.A. eeschema 6.0.11+dfsg-1
Id: 1/6

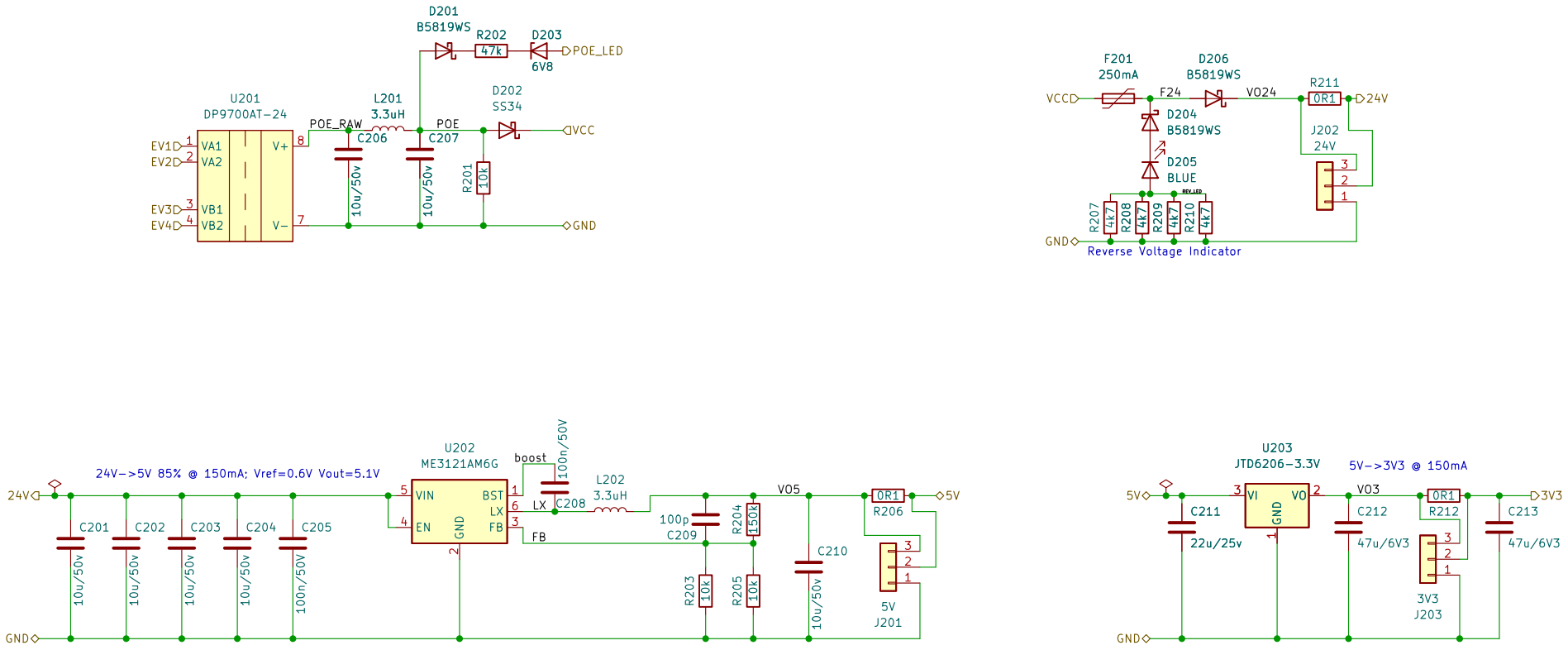

makerspace.lt

Sheet: /PSU/

File: _psu.kicad_sch

Title: WormControl-GwPoeAt-ControlBoard

Size: A4	Date: 2026-03-13	**Rev: 0.1**
KiCad E.D.A. eeschema 6.0.11+dfsg-1		Id: 3/6

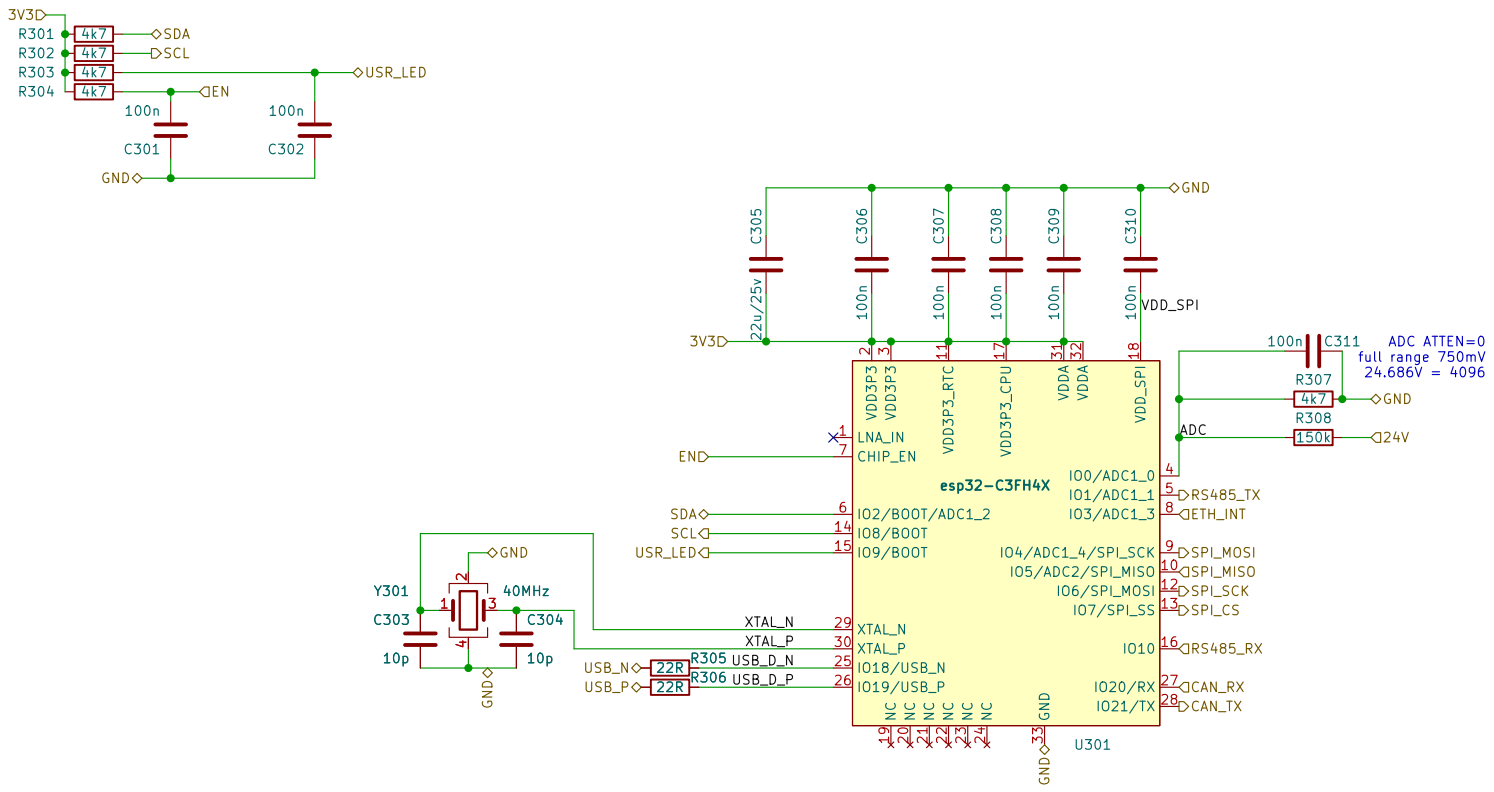

makerspace.lt

Sheet: /uC/

File: _uc.kicad_sch

Title: WormControl-GwPoeAt-ControlBoard

Size: A4	Date: 2026-03-13	**Rev: 0.1**
KiCad E.D.A. eeschema 6.0.11+dfsg-1		Id: 4/6

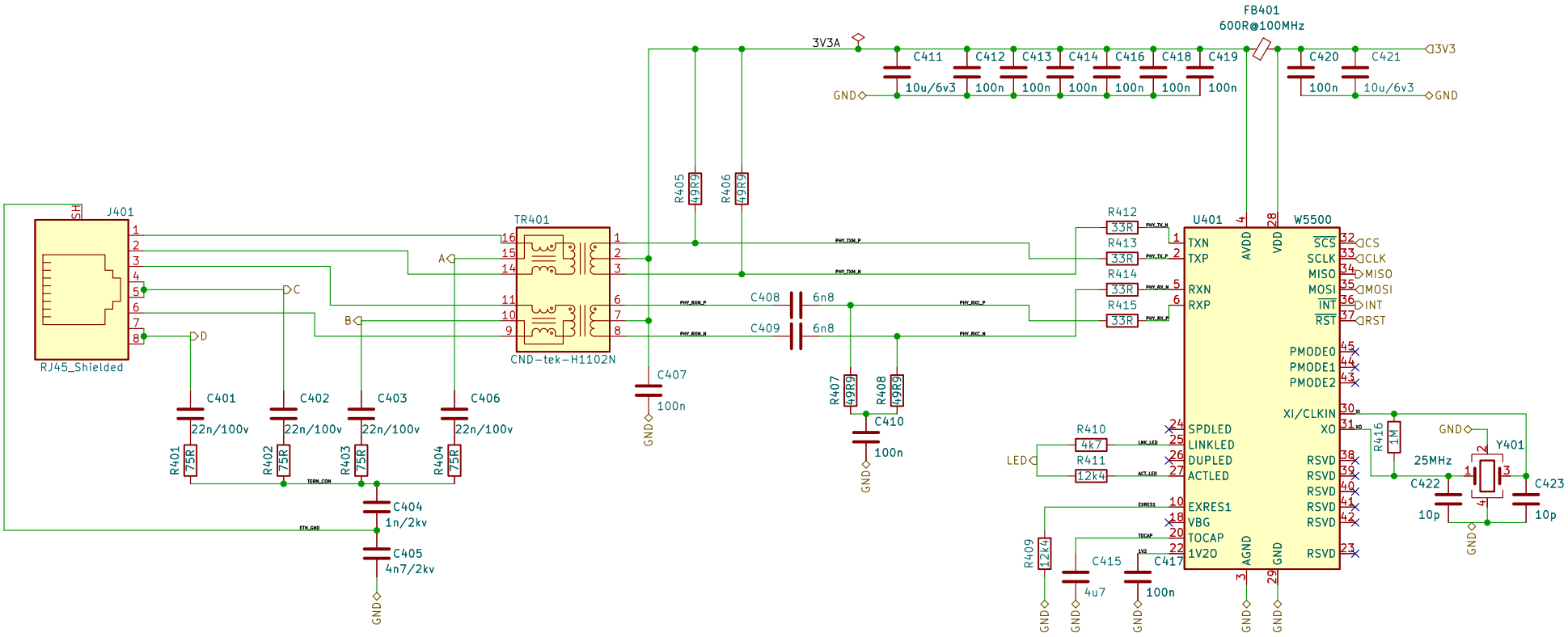

makerspace.lt

Sheet: /ETH/

File: _eth.kicad_sch

Title: WormControl-GwPoeAt-ControlBoard

Size: A4	Date: 2026-03-13	Rev: 0.1
KiCad E.D.A. eeschema 6.0.11+dfsg-1		Id: 5/6

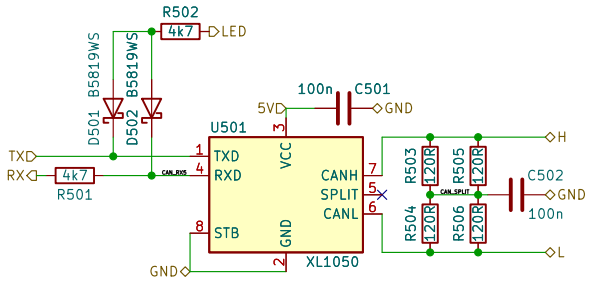

makerspace.lt

Sheet: /CAN/

File: _can.kicad_sch

Title: WormControl-GwPoeAt-ControlBoard

Size: A4	Date: 2026-03-13	Rev: 0.1
KiCad E.D.A. eeschema 6.0.11+dfsg-1		Id: 5/6

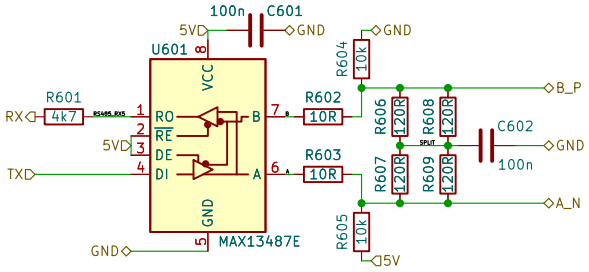

makerspace.lt

Sheet: /RS485/

File: _rs485.kicad_sch

Title: WormControl-GwPoeAt-ControlBoard

Size: A4	Date: 2026-03-13	Rev: 0.1
KiCad E.D.A. eeschema 6.0.11+dfsg-1		Id: 6/6