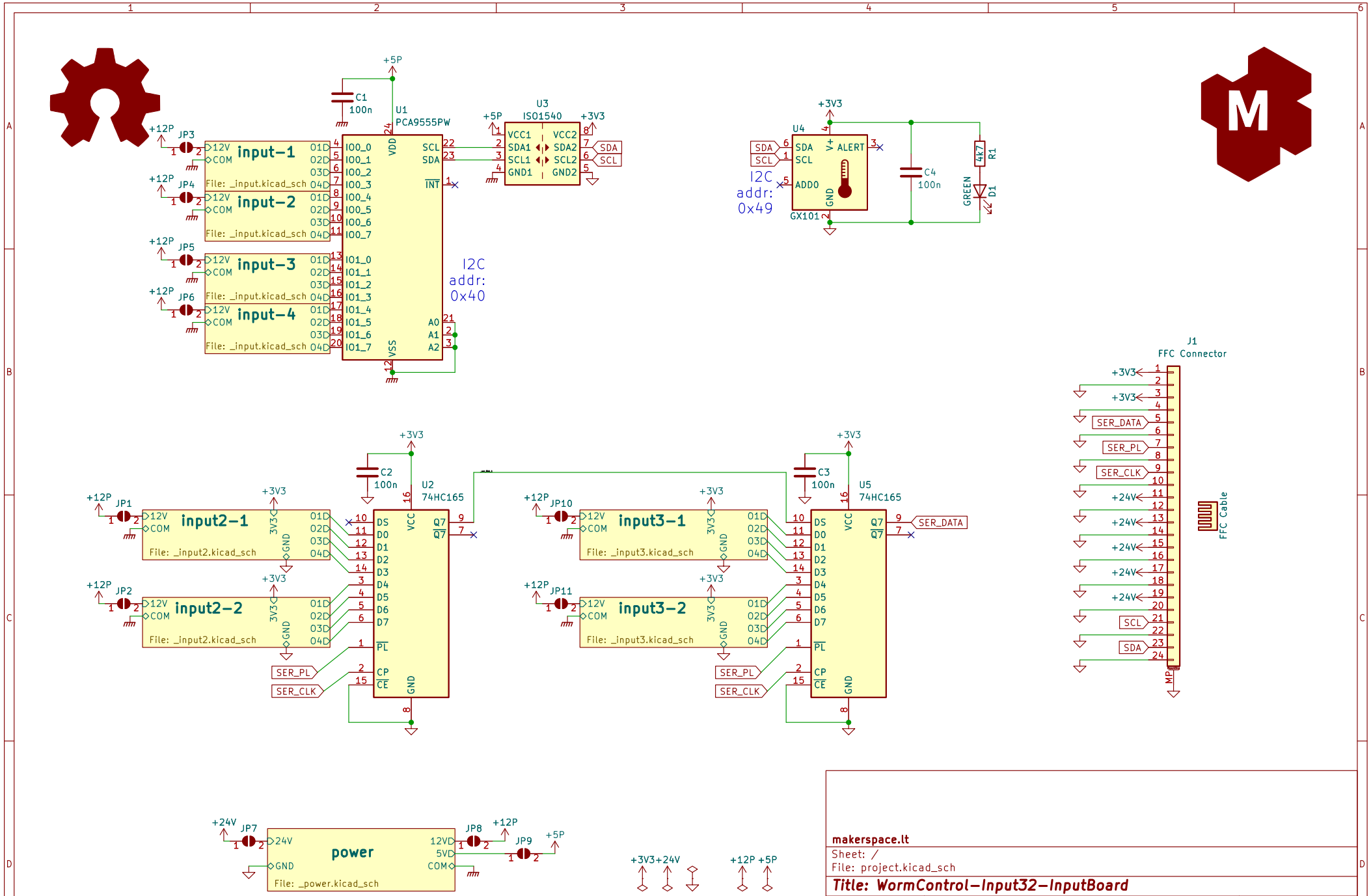

makerspace.lt

Sheet: /

File: project.kicad_sch

Title: WormControl-Input32-InputBoard

Size: A4	Date: 2025-06-09	Rev: 0.1
KiCad E.D.A. eeschema 6.0.10+dfsg-1~bpo11+1		Id: 1/10

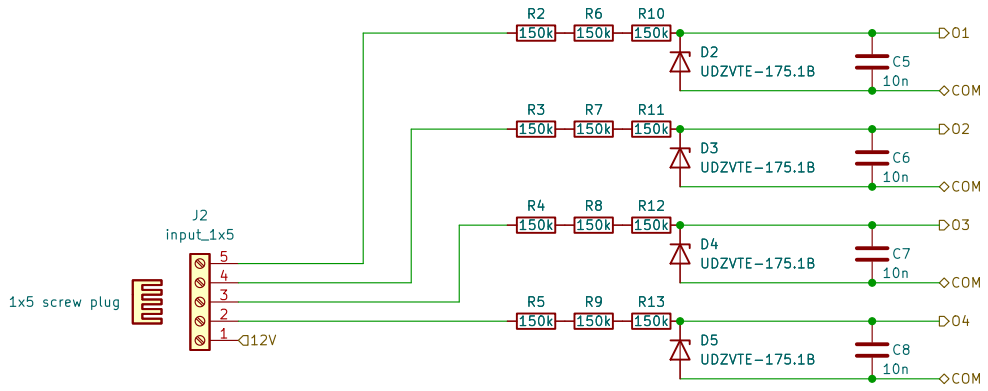

Sheet: /input-2/
File: _input.kicad_sch

Title:

Size: A4	Date:	**Rev:**
KiCad E.D.A. eeschema 6.0.10+dfsg-1~bpo11+1		Id: 2/10

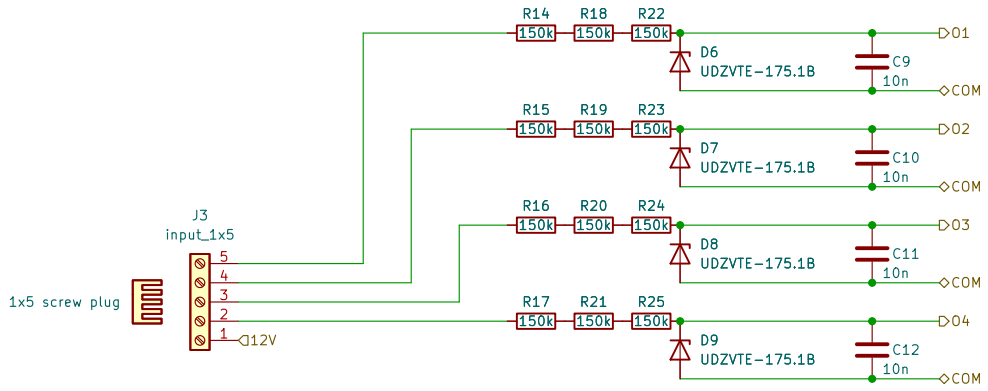

Sheet: /input-3/
File: _input.kicad_sch

Title:

Size: A4	Date:	**Rev:**
KiCad E.D.A. eeschema 6.0.10+dfsg-1~bpo11+1		Id: 3/10

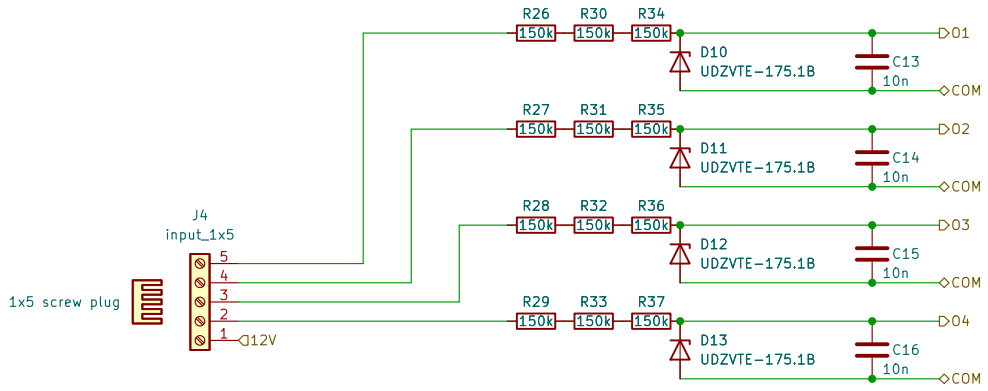

Sheet: /input-4/
File: _input.kicad_sch

Title:

Size: A4	Date:	**Rev:**
KiCad E.D.A. eeschema 6.0.10+dfsg-1~bpo11+1		Id: 4/10

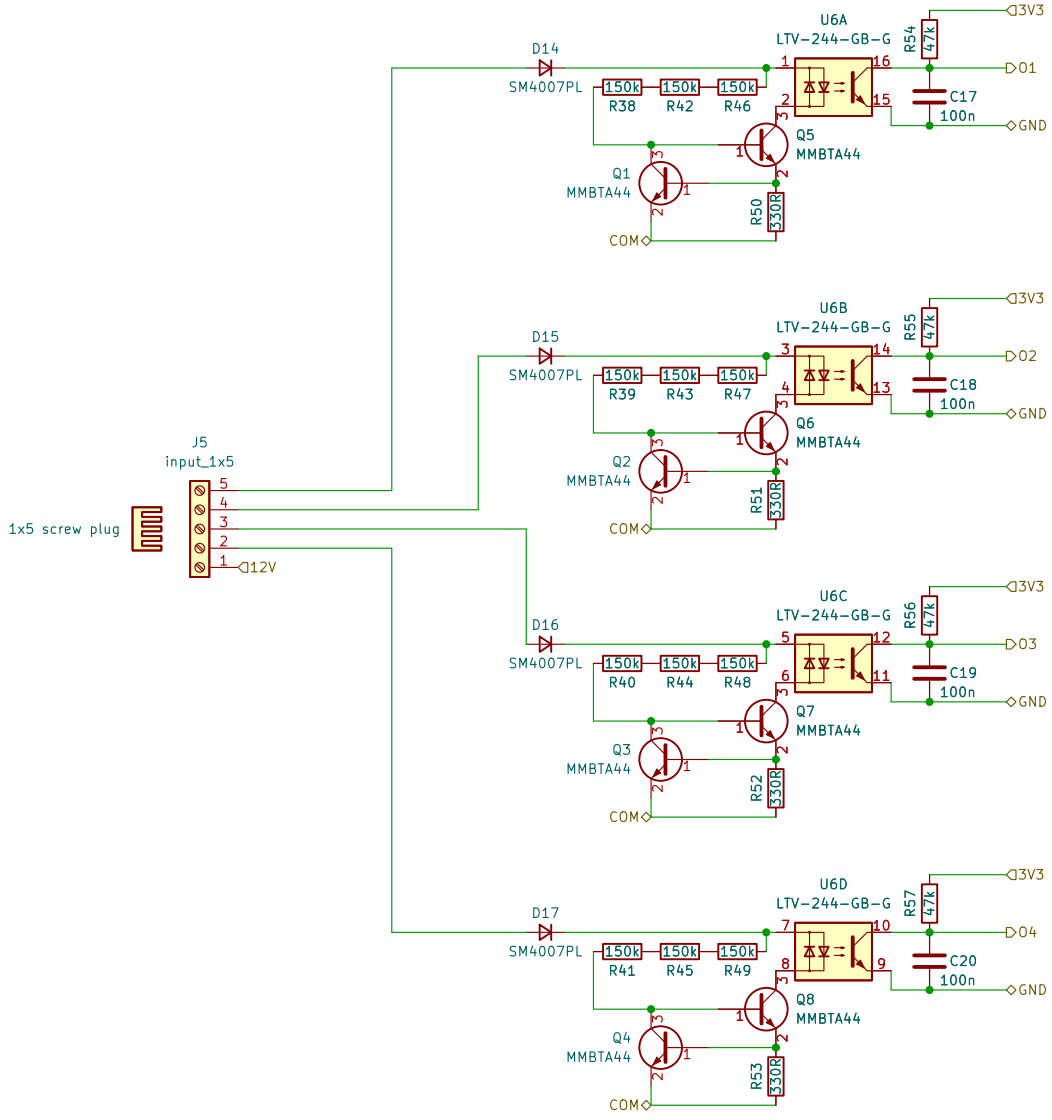

Sheet: /input2-2/
File: _input2.kicad_sch

Title:

Size: A4	Date:	**Rev:**
KiCad E.D.A. eeschema 6.0.10+dfsg-1~bpo11+1		Id: 5/10

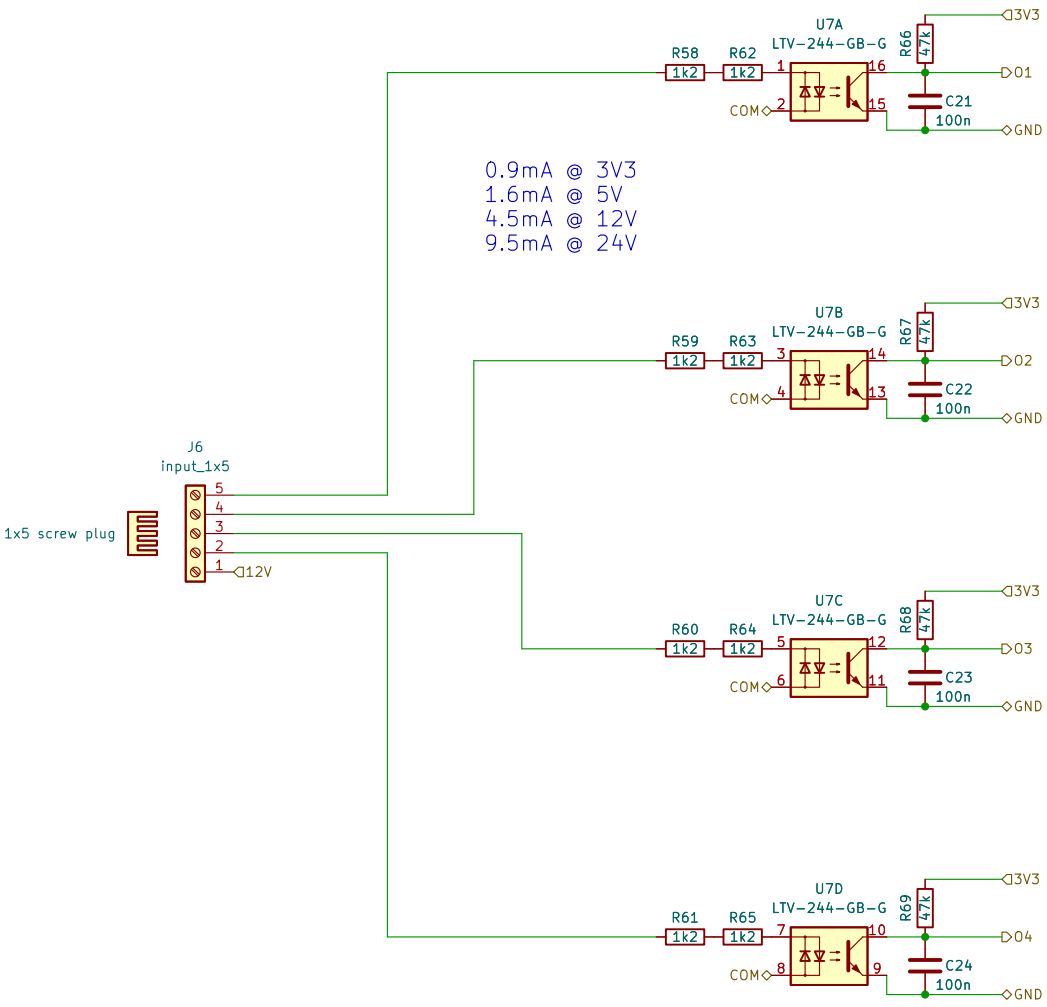

Sheet: /input3-2/
File: _input3.kicad_sch

Title:

Size: A4	Date:	**Rev:**
KiCad E.D.A. eeschema 6.0.10+dfsg-1~bpo11+1		Id: 6/10

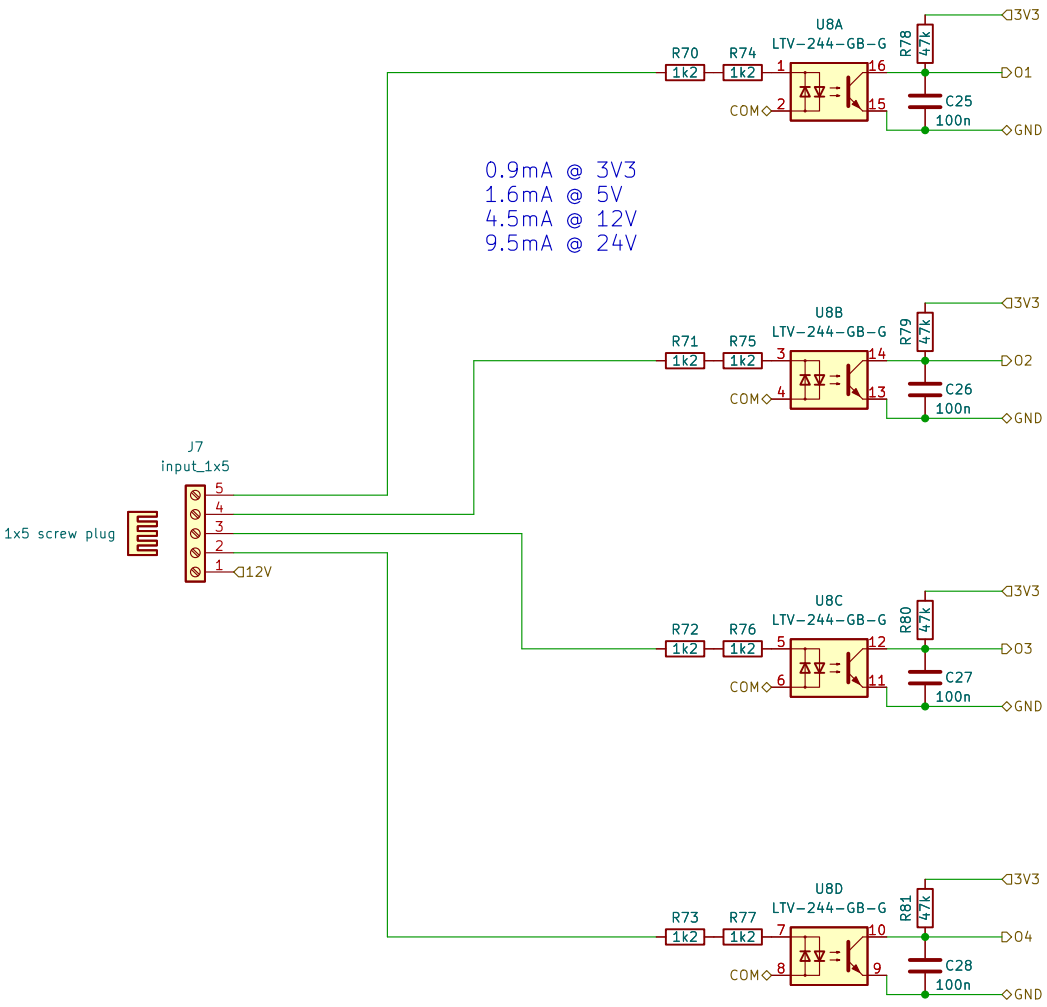

Sheet: /input3-1/
File: _input3.kicad_sch

Title:

Size: A4	Date:	Rev:
KiCad E.D.A. eeschema 6.0.10+dfsg-1-bpo11+1		Id: 8/10

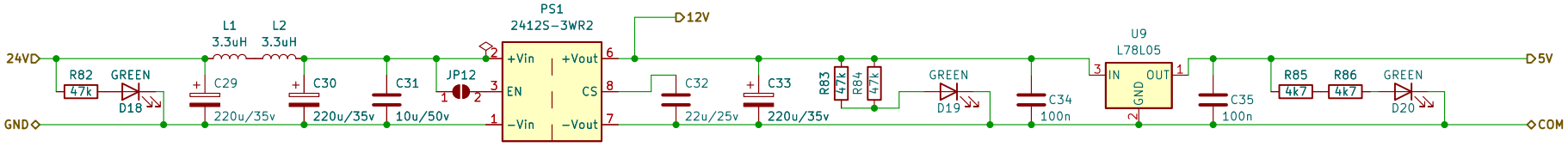

Sheet: /power/
File: _power.kicad_sch

Title:

Size: A4	Date:	Rev:
KiCad E.D.A. eeschema 6.0.10+dfsg-1~bpo11+1		Id: 10/10

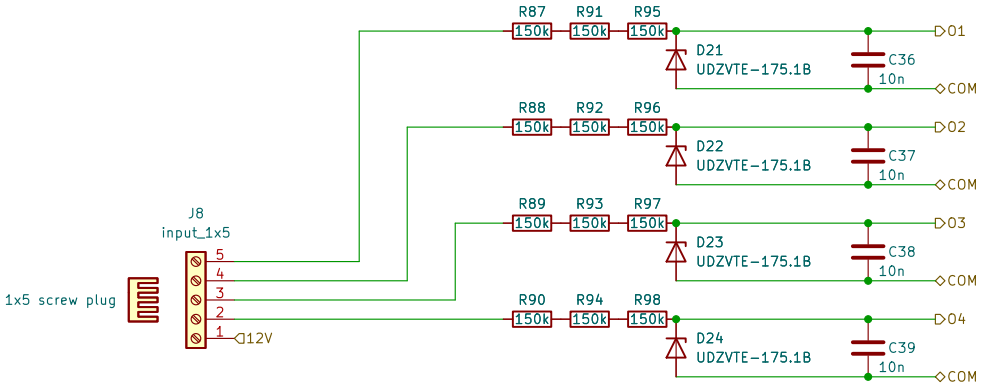

Sheet: /input-1/
File: _input.kicad_sch

Title:

Size: A4	Date:	**Rev:**
KiCad E.D.A. eeschema 6.0.10+dfsg-1~bpo11+1		Id: 17/10

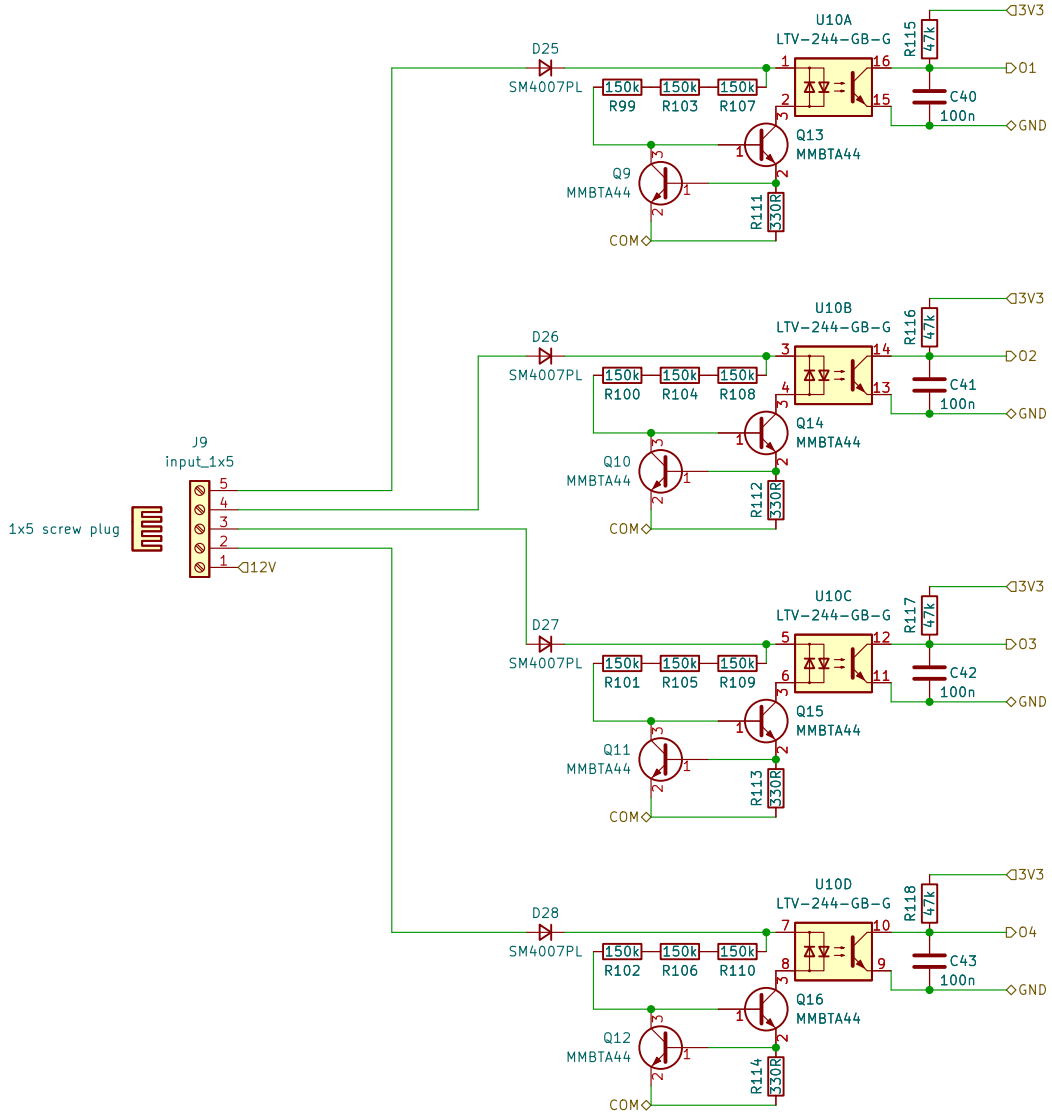

Sheet: /input2-1/
File: _input2.kicad_sch

Title:

Size: A4	Date:	**Rev:**
KiCad E.D.A. eeschema 6.0.10+dfsg-1~bpo11+1		Id: 20/10