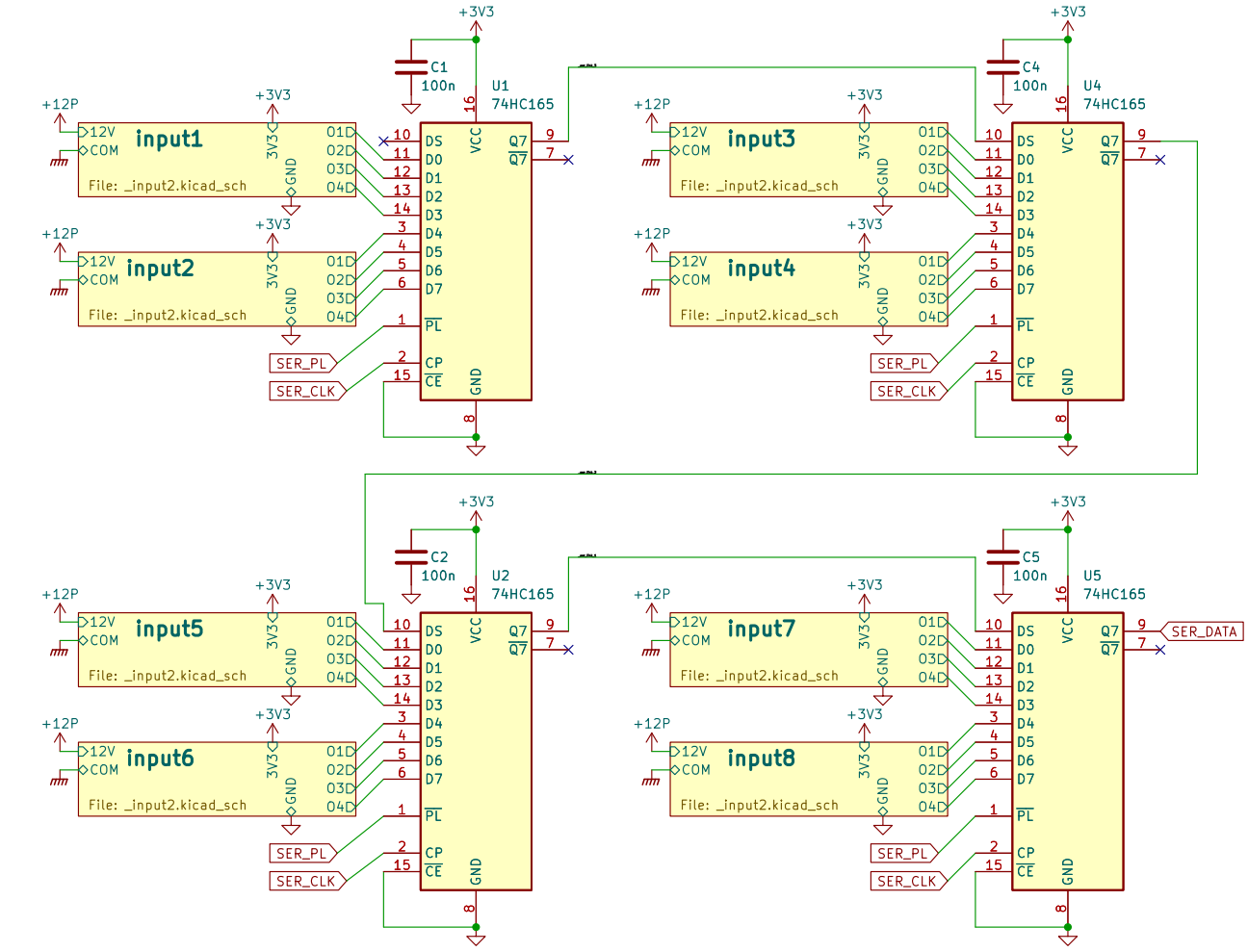

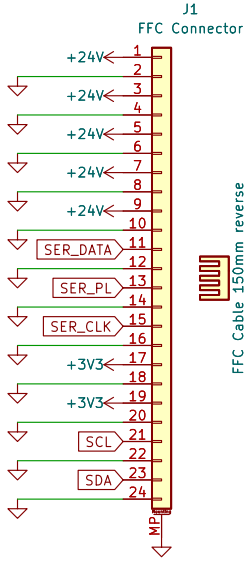

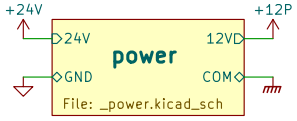

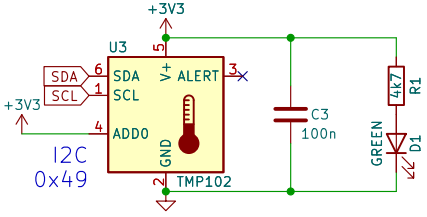

makerspace.lt

Sheet: /

File: project.kicad_sch

Title: WormControl–Input32–InputBoard

Size: A4	Date: 2026-03-19	Rev: 0.3
KiCad E.D.A. eeschema 6.0.11+dfsg-1		Id: 1/10

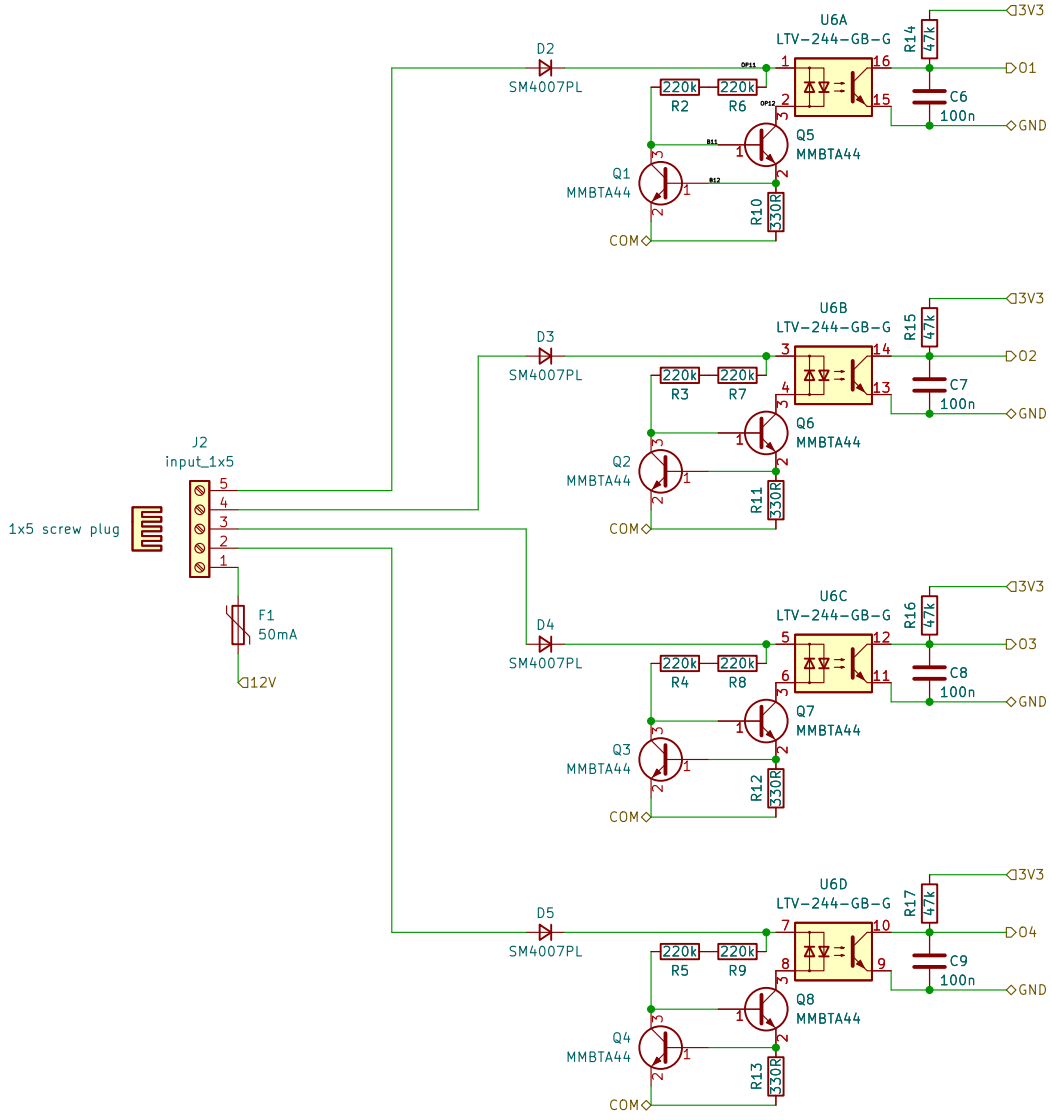

makerspace.lt

Sheet: /input3/

File: _input2.kicad_sch

Title: WormControl-Input32-InputBoard

Size: A4	Date: 2026-03-19	Rev: 0.3
KiCad E.D.A. eeschema 6.0.11+dfsg-1		Id: 2/10

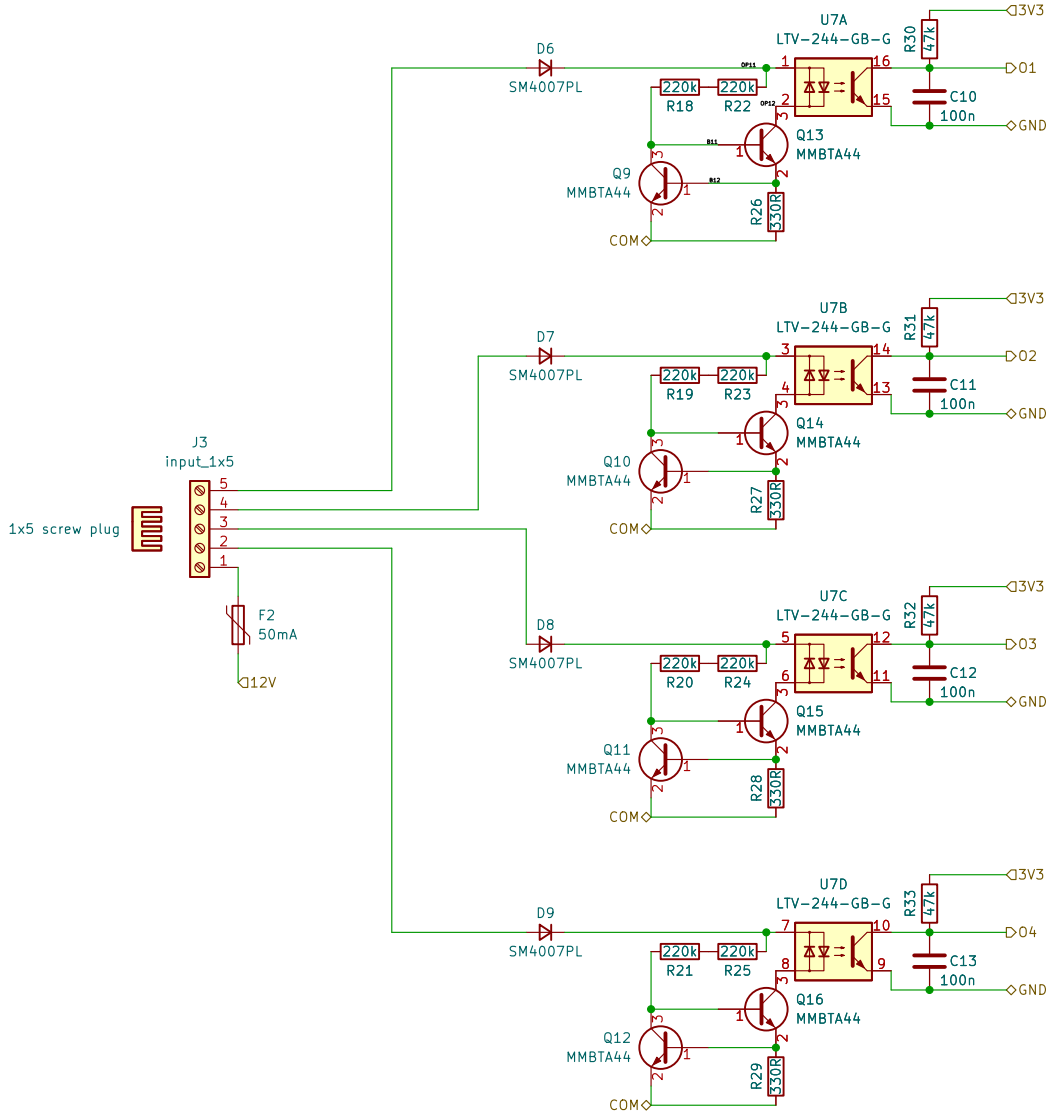

makerspace.lt

Sheet: /input4/
File: _input2.kicad_sch

Title: WormControl-Input32-InputBoard

Size: A4	Date: 2026-03-19	**Rev: 0.3**
KiCad E.D.A. eeschema 6.0.11+dfsg-1		Id: 3/10

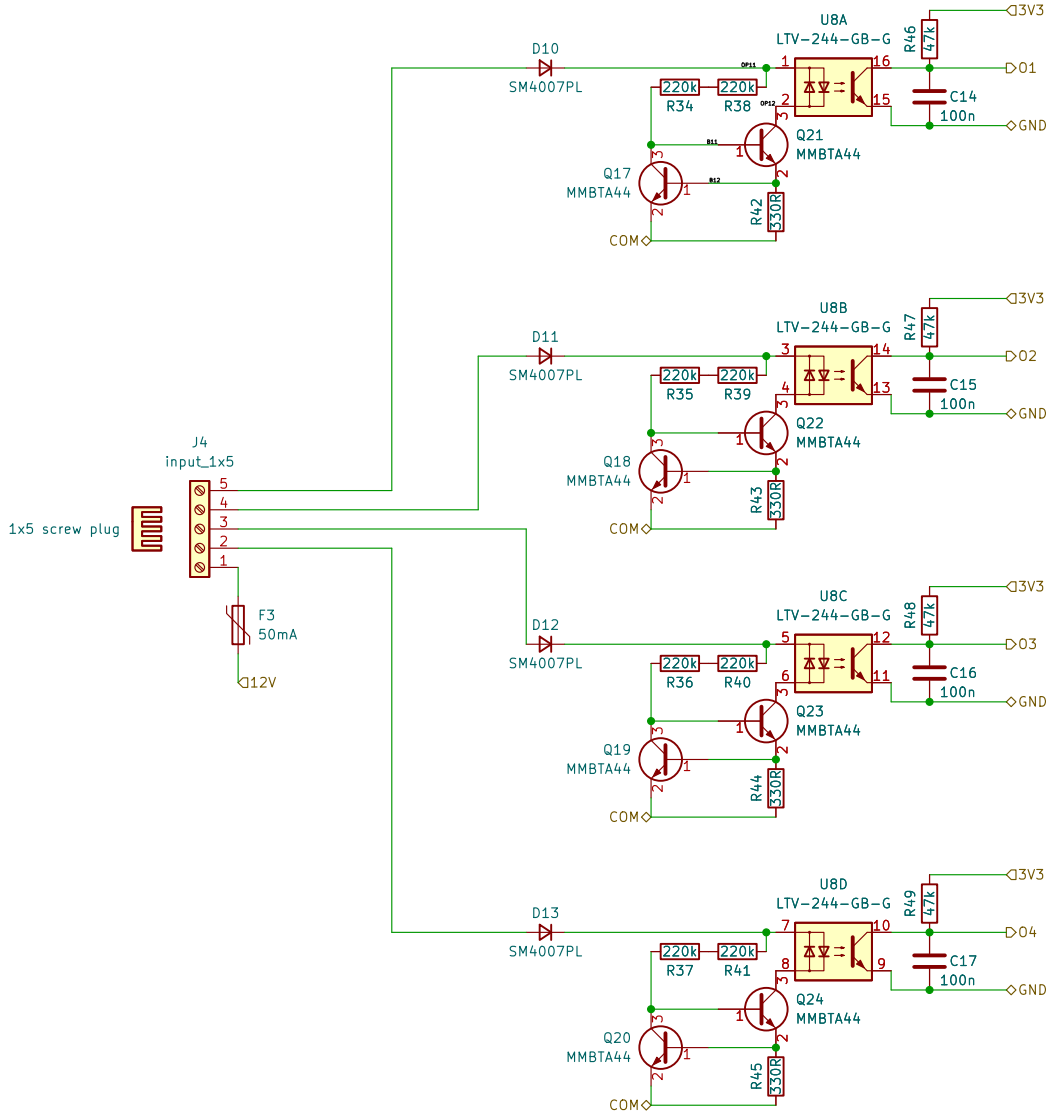

makerspace.lt

Sheet: /input6/
File: _input2.kicad_sch

Title: WormControl–Input32–InputBoard

Size: A4	Date: 2026-03-19	**Rev: 0.3**
KiCad E.D.A. eeschema 6.0.11+dfsg-1		Id: 4/10

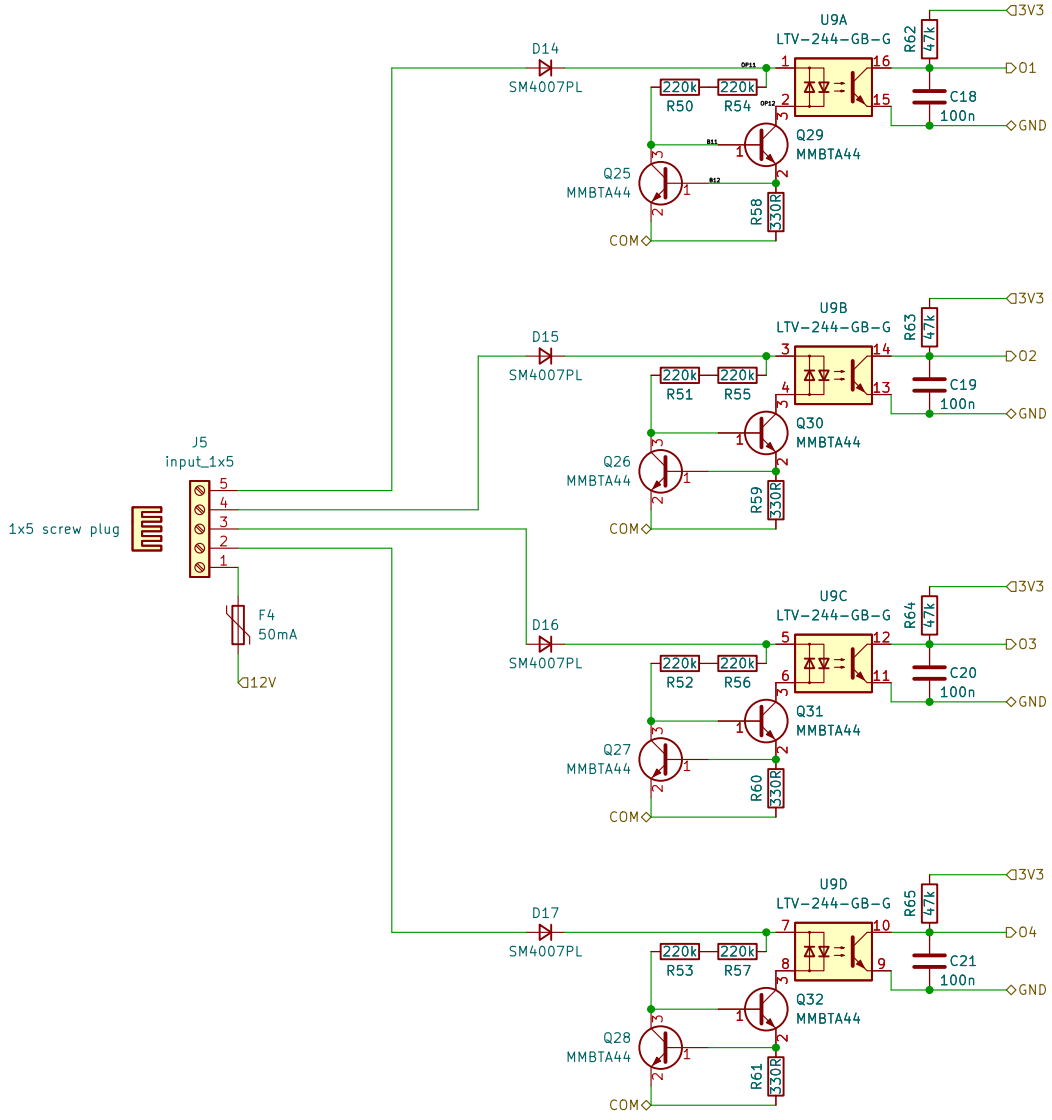

makerspace.lt

Sheet: /input2/
File: _input2.kicad_sch

Title: WormControl-Input32-InputBoard

Size: A4	Date: 2026-03-19	**Rev: 0.3**
KiCad E.D.A. eeschema 6.0.11+dfsg-1		Id: 5/10

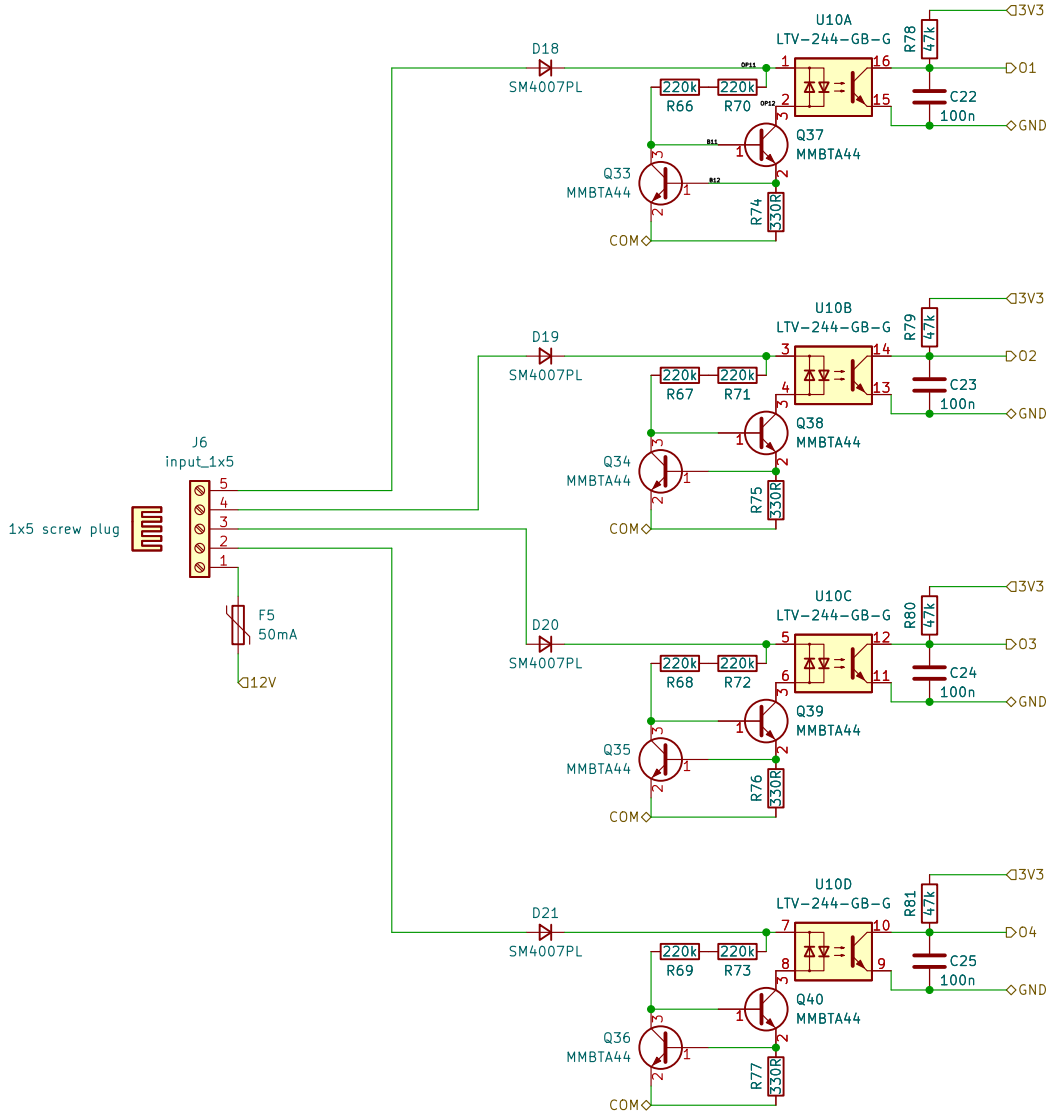

makerspace.lt

Sheet: /input5/
File: _input2.kicad_sch

Title: WormControl-Input32-InputBoard

Size: A4	Date: 2026-03-19	**Rev: 0.3**
KiCad E.D.A. eeschema 6.0.11+dfsg-1		Id: 6/10

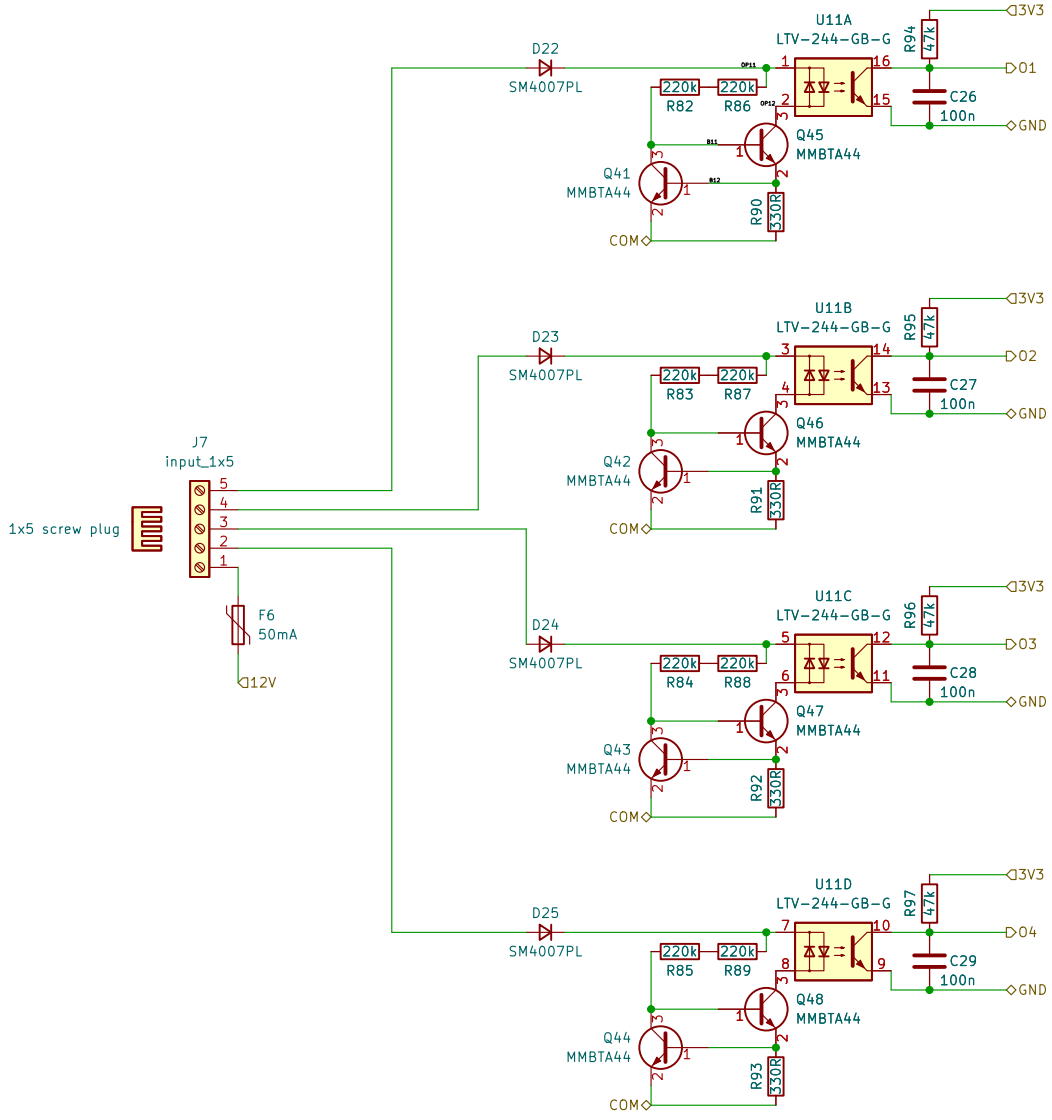

makerspace.lt

Sheet: /input7/
File: _input2.kicad_sch

Title: WormControl-Input32-InputBoard

Size: A4	Date: 2026-03-19	Rev: 0.3
KiCad E.D.A. eeschema 6.0.11+dfsg-1		Id: 7/10

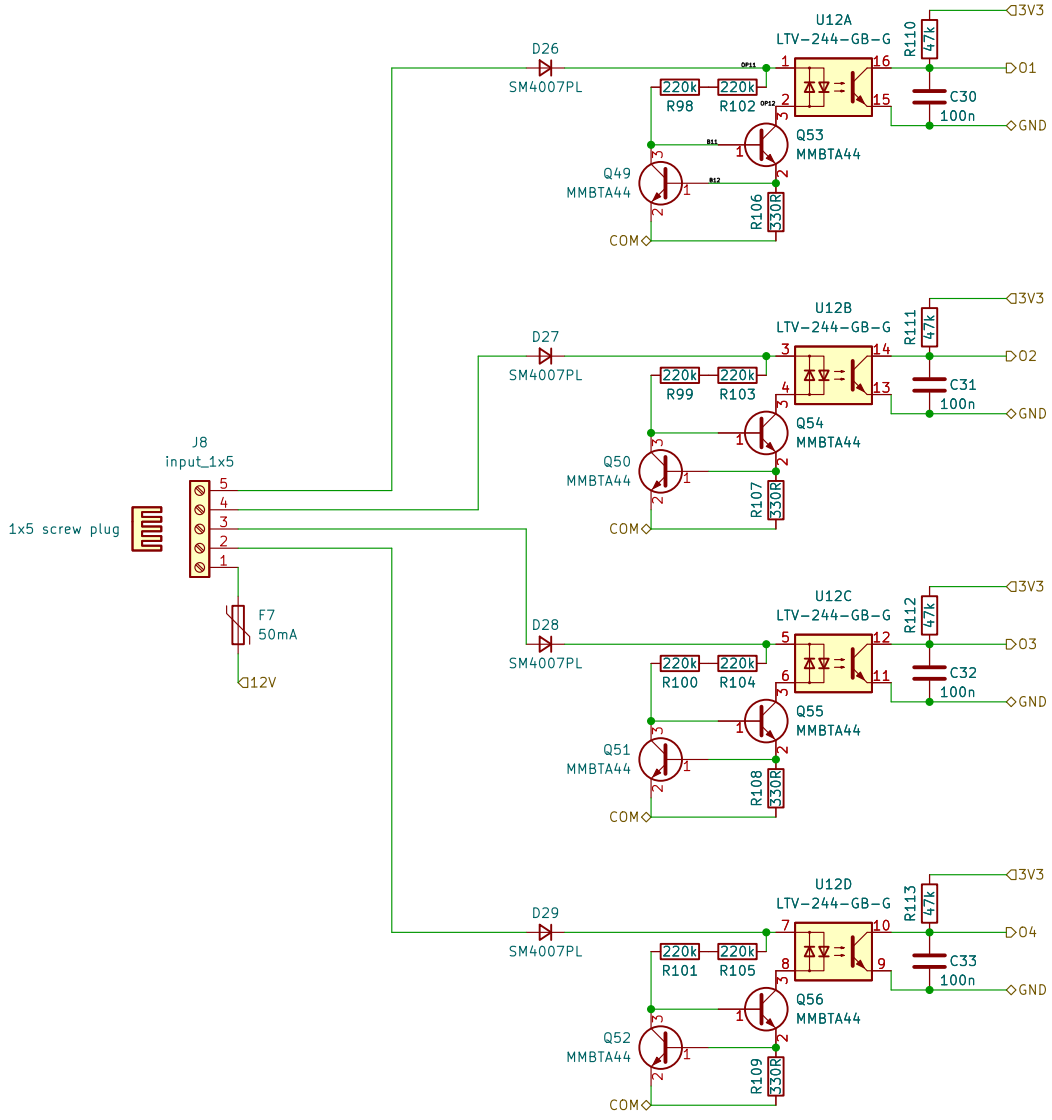

makerspace.lt

Sheet: /input8/
File: _input2.kicad_sch

Title: WormControl-Input32-InputBoard

Size: A4	Date: 2026-03-19	**Rev: 0.3**
KiCad E.D.A. eeschema 6.0.11+dfsg-1		Id: 8/10

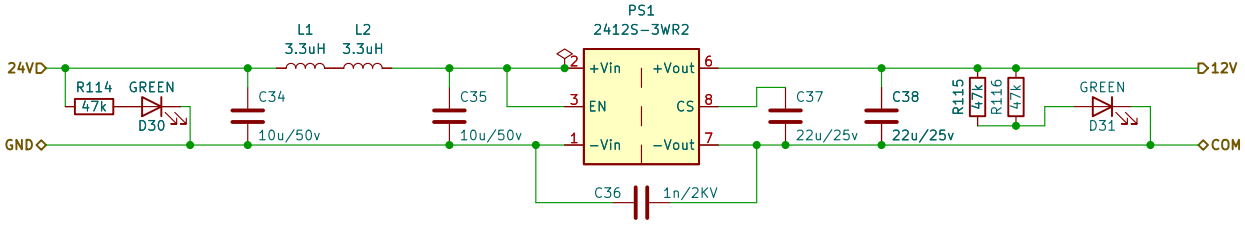

makerspace.lt

Sheet: /power/

File: _power.kicad_sch

Title: WormControl-Input32-InputBoard

Size: A4	Date: 2026-03-19	Rev: 0.3
KiCad E.D.A. eeschema 6.0.11+dfsg-1		Id: 10/10

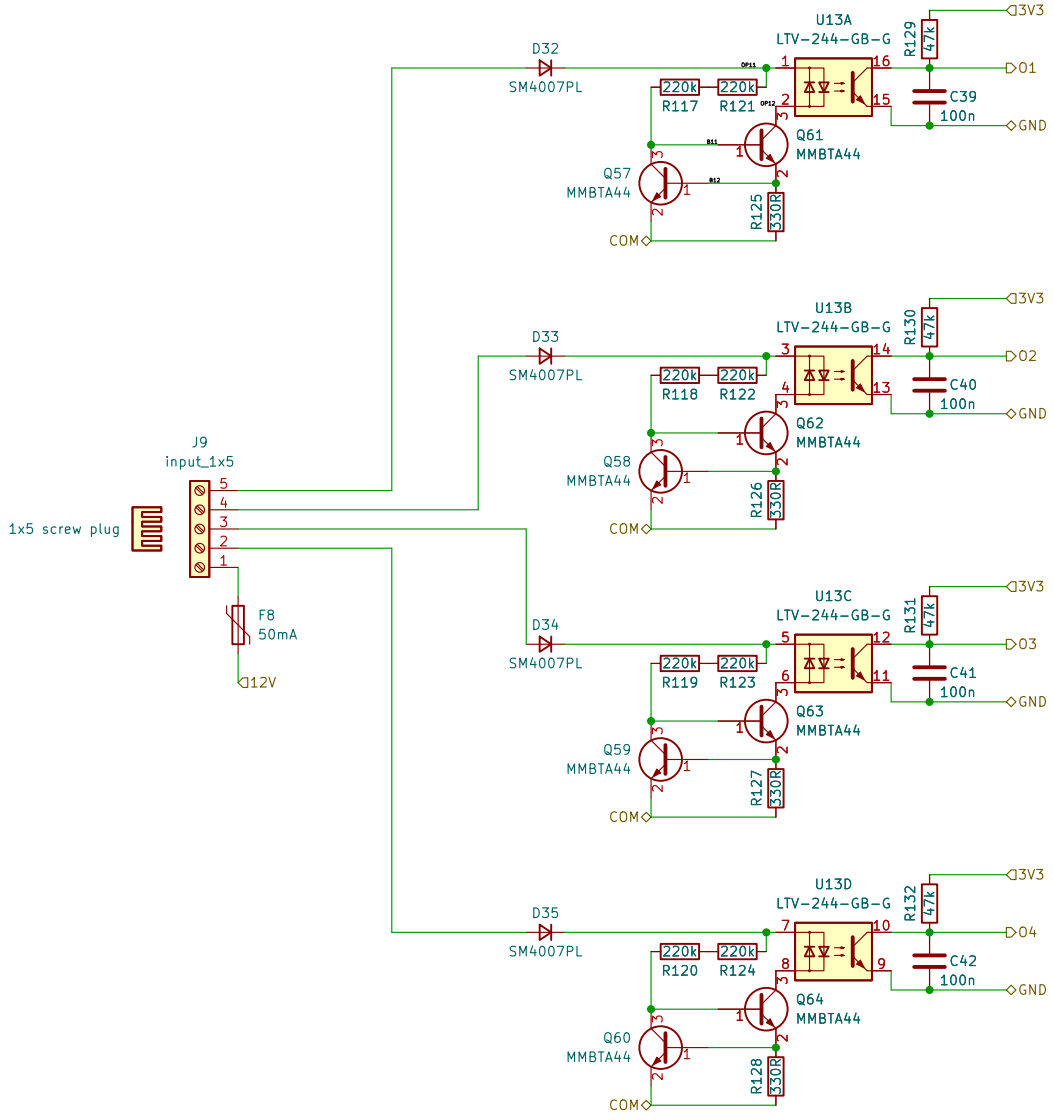

makerspace.lt

Sheet: /input1/
File: _input2.kicad_sch

Title: WormControl-Input32-InputBoard

Size: A4	Date: 2026-03-19	Rev: 0.3
KiCad E.D.A. eeschema 6.0.11+dfsg-1		Id: 20/10