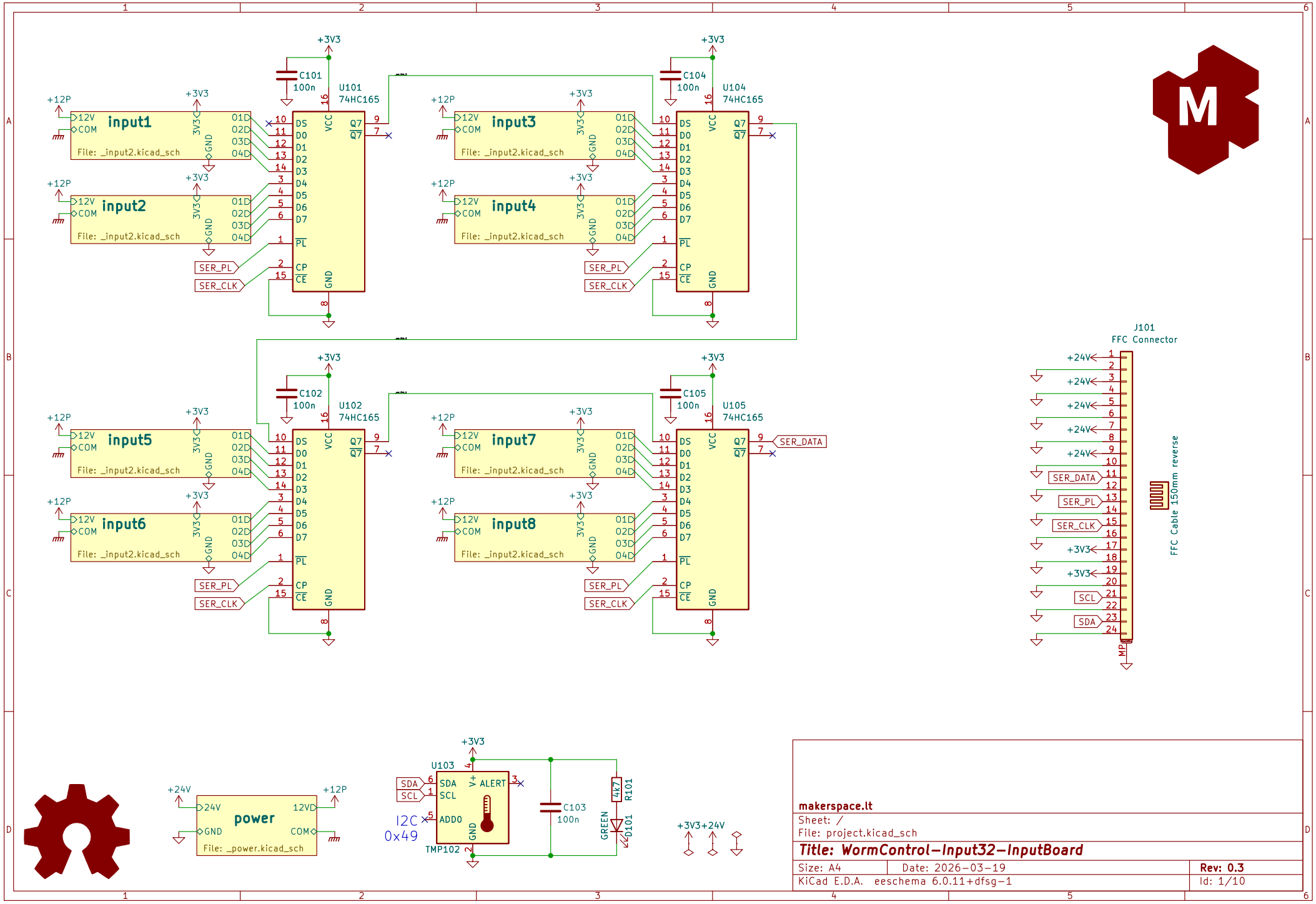
input1
input2
input3
input4
input5
input6
input7
input8
File: _input2.kicad_sch
U101 74HC165
U102 74HC165
U104 74HC165
U105 74HC165
C101 100n
C102 100n
C104 100n
C105 100n
+3V3
+12P
SER_PL
SER_CLK
SER_DATA
J101
FFC Connector
FFC Cable 150mm reverse
+24V
SCL
SDA
power
File: _power.kicad_sch
+24V
+12P
U103
TMP102
I2C
0x49
C103 100n
R101 4k7
D101 GREEN
makerspace.lt
Sheet: /
File: project.kicad_sch
Title: WormControl-Input32-InputBoard
Size: A4
Date: 2026-03-19
Rev: 0.3
KiCad E.D.A. eeschema 6.0.11+dfsg-1
Id: 1/10

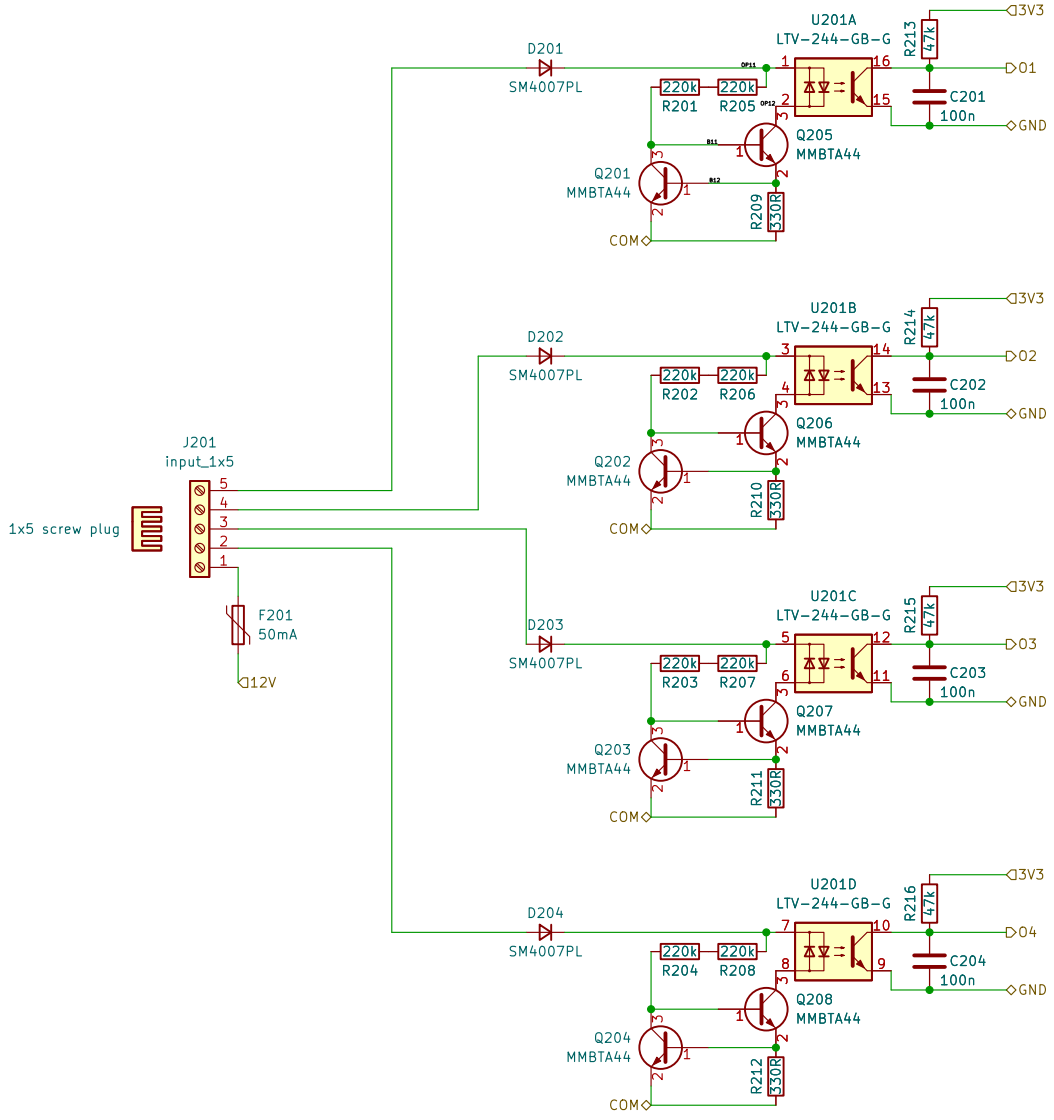


**makerspace.lt**

Sheet: /input3/
File: _input2.kicad_sch

**Title: WormControl-Input32-InputBoard**

| | | |
|---|---|---|
| Size: A4 | Date: 2026-03-19 | **Rev: 0.3** |
| KiCad E.D.A. eeschema 6.0.11+dfsg-1 | | Id: 2/10 |

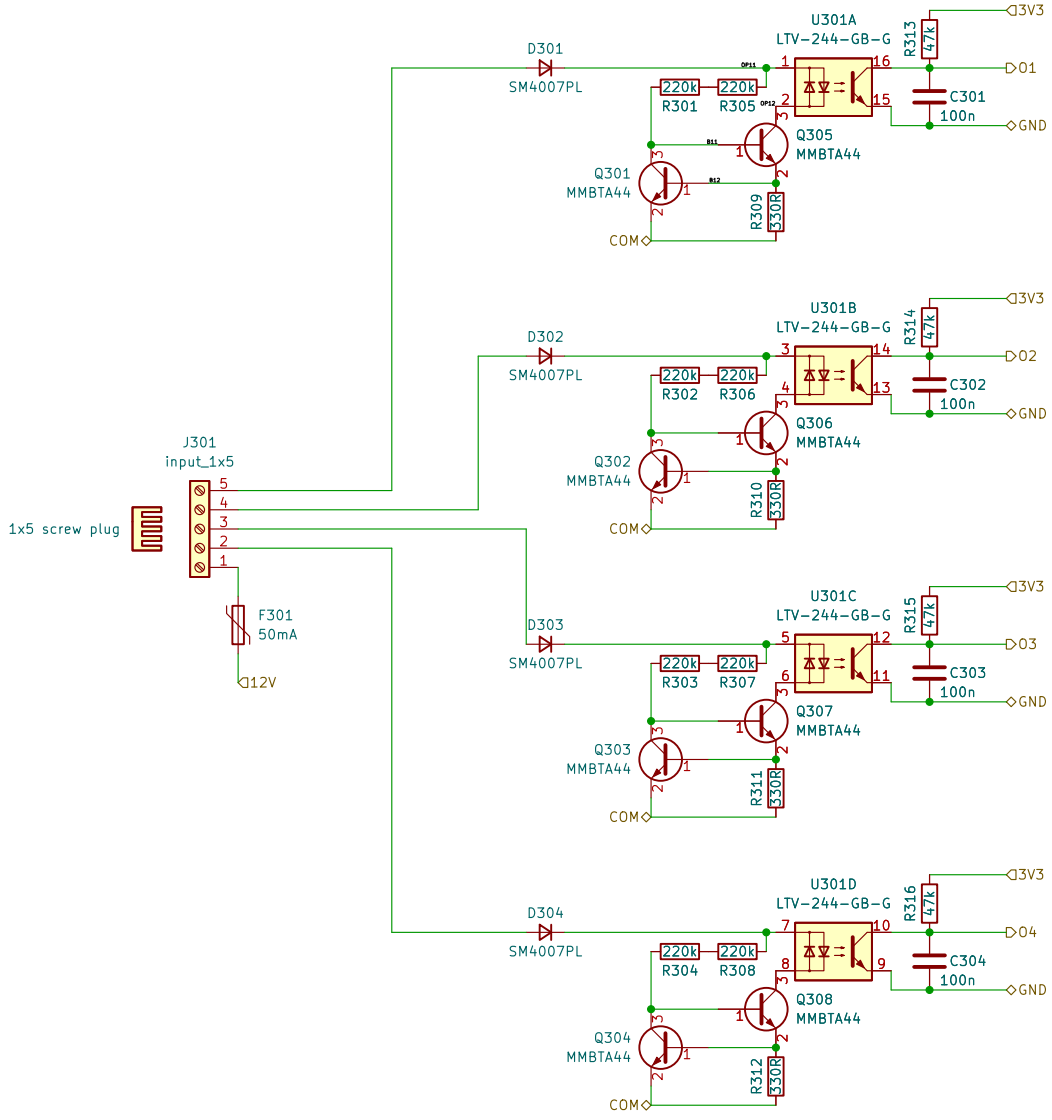


**makerspace.lt**

Sheet: /input4/
File: _input2.kicad_sch

**Title: WormControl-Input32-InputBoard**

| | | |
|---|---|---|
| Size: A4 | Date: 2026-03-19 | Rev: 0.3 |
| KiCad E.D.A. eeschema 6.0.11+dfsg-1 | | Id: 3/10 |

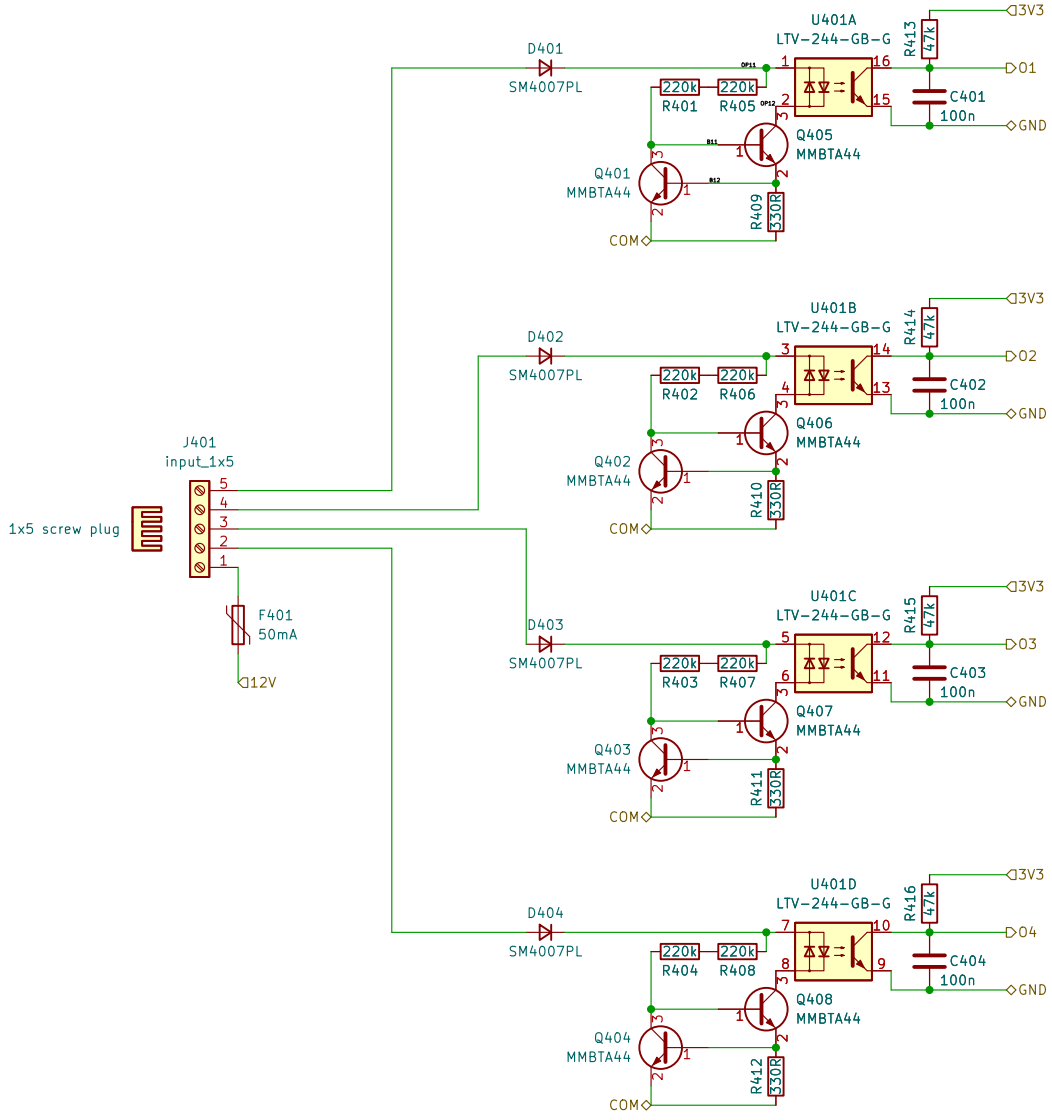


**makerspace.lt**

Sheet: /input6/
File: _input2.kicad_sch

**Title: WormControl–Input32–InputBoard**

| | | |
|---|---|---|
| Size: A4 | Date: 2026-03-19 | Rev: 0.3 |
| KiCad E.D.A. eeschema 6.0.11+dfsg-1 | | Id: 4/10 |

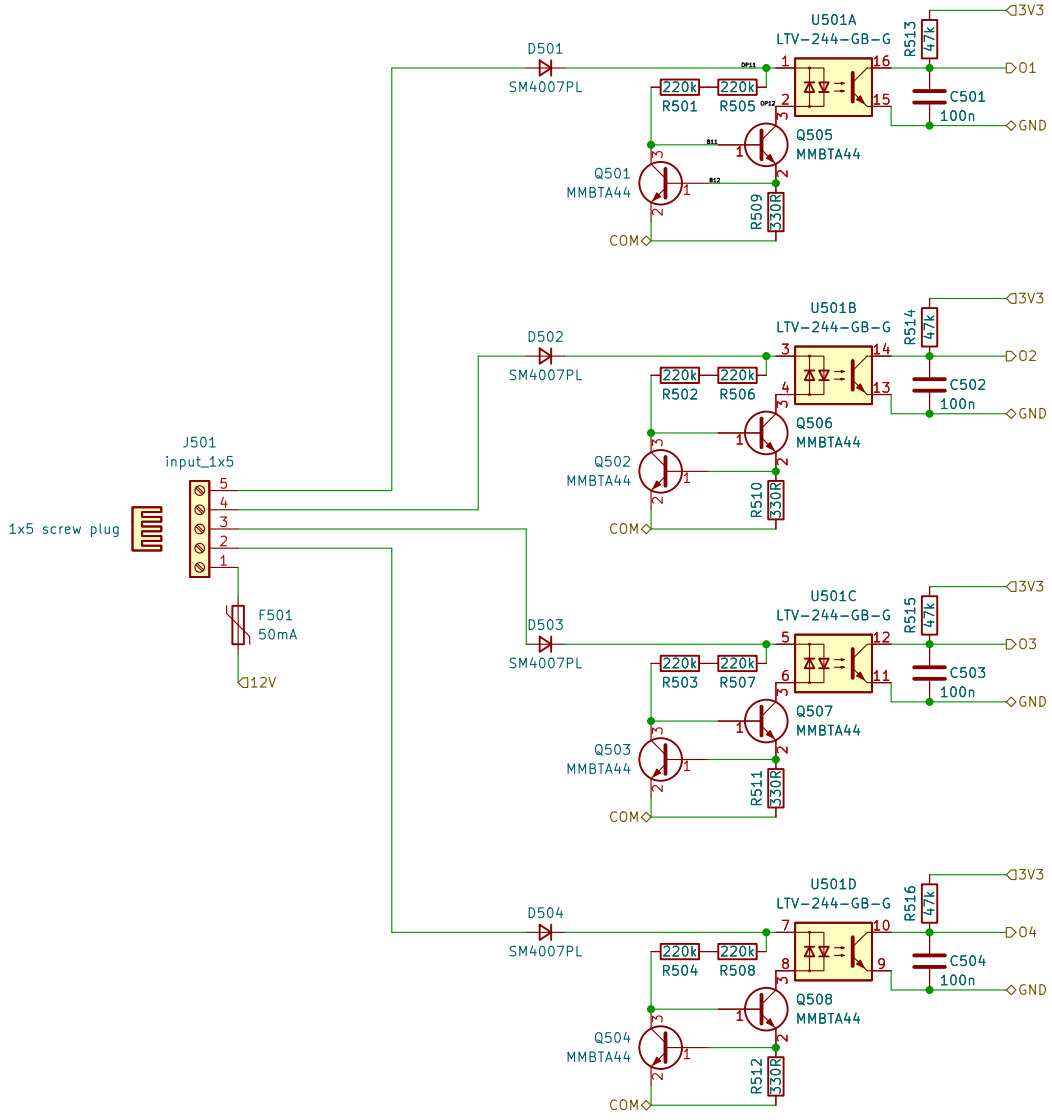


makerspace.lt

Sheet: /input2/

File: _input2.kicad_sch

**Title: WormControl-Input32-InputBoard**

| | | |
|---|---|---|
| Size: A4 | Date: 2026-03-19 | Rev: 0.3 |
| KiCad E.D.A. eeschema 6.0.11+dfsg-1 | | Id: 5/10 |

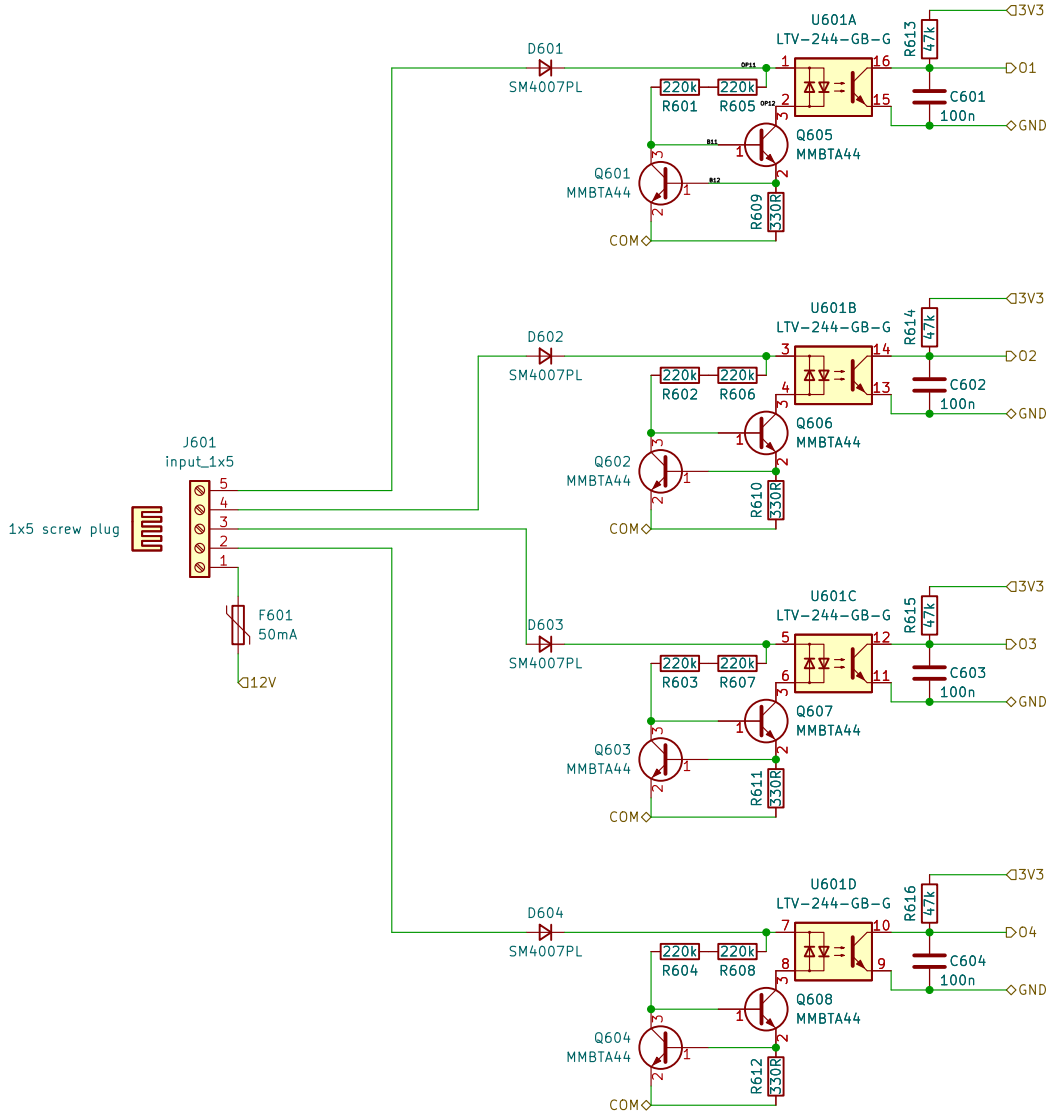


**makerspace.lt**

Sheet: /input5/
File: _input2.kicad_sch

**Title: WormControl–Input32–InputBoard**

| | | |
|---|---|---|
| Size: A4 | Date: 2026-03-19 | Rev: 0.3 |
| KiCad E.D.A. eeschema 6.0.11+dfsg-1 | | Id: 6/10 |

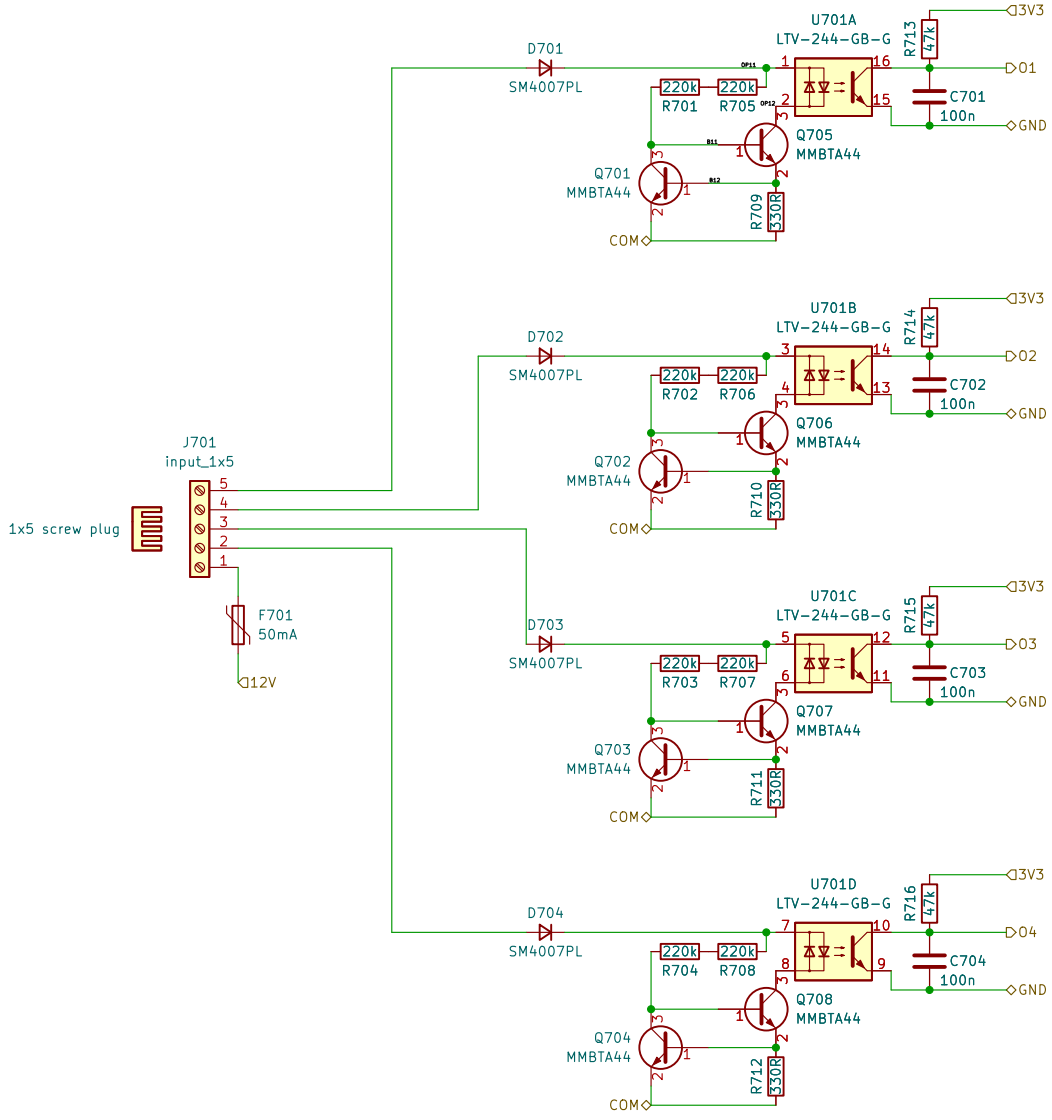


makerspace.lt

Sheet: /input7/

File: _input2.kicad_sch

**Title: WormControl-Input32-InputBoard**

| | | |
|---|---|---|
| Size: A4 | Date: 2026-03-19 | Rev: 0.3 |
| KiCad E.D.A. eeschema 6.0.11+dfsg-1 | | Id: 7/10 |

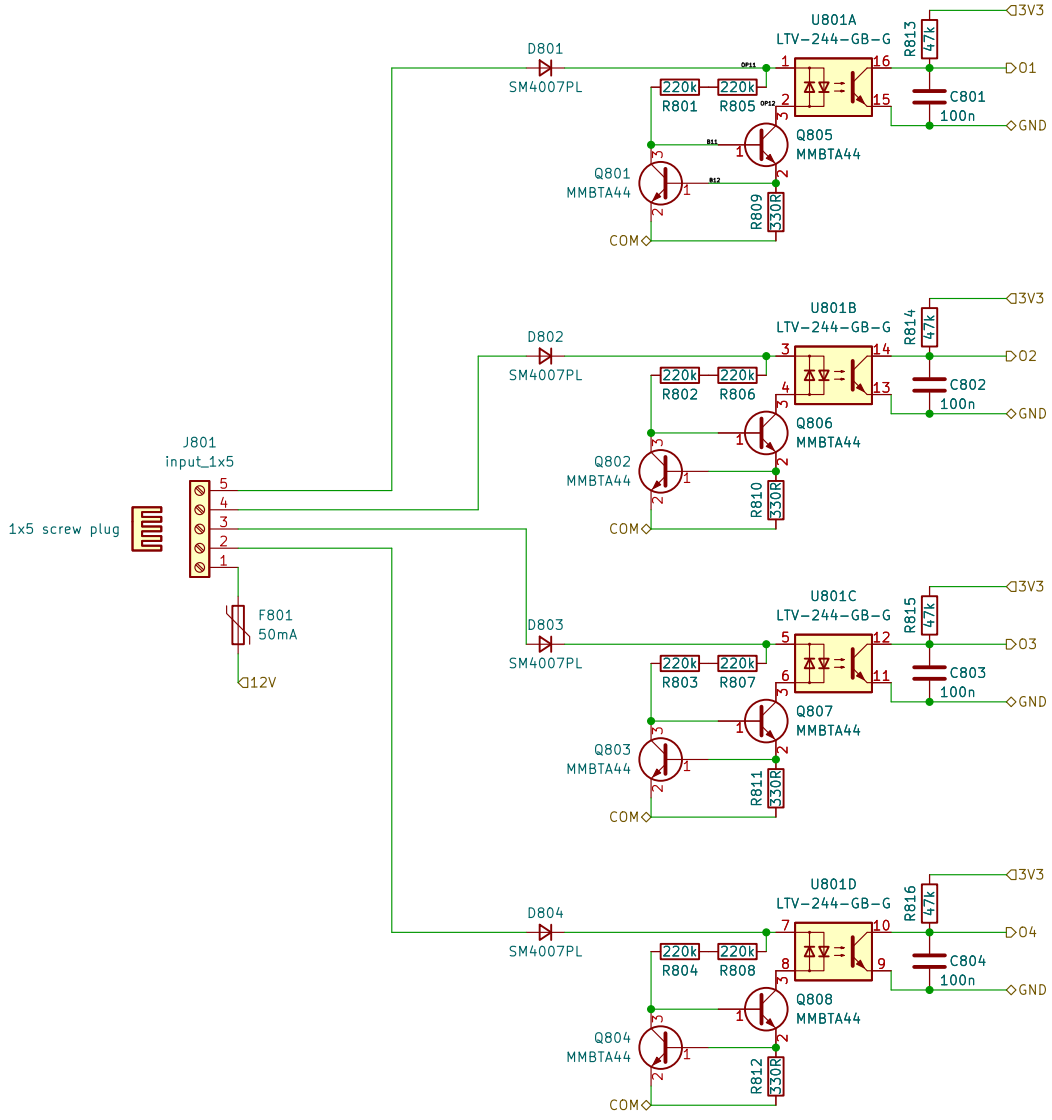


**makerspace.lt**

Sheet: /input8/
File: _input2.kicad_sch

**Title: WormControl-Input32-InputBoard**

| | | |
|---|---|---|
| Size: A4 | Date: 2026-03-19 | Rev: 0.3 |
| KiCad E.D.A. eeschema 6.0.11+dfsg-1 | | Id: 8/10 |

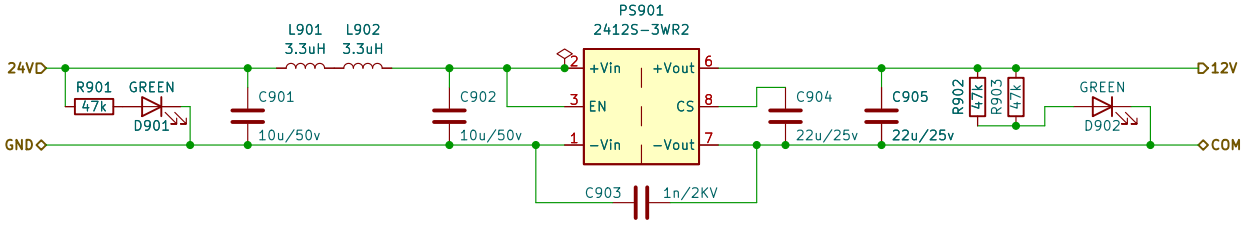


makerspace.lt

Sheet: /power/

File: _power.kicad_sch

**Title: WormControl-Input32-InputBoard**

| | | |
|---|---|---|
| Size: A4 | Date: 2026-03-19 | Rev: 0.3 |
| KiCad E.D.A. eeschema 6.0.11+dfsg-1 | | Id: 10/10 |

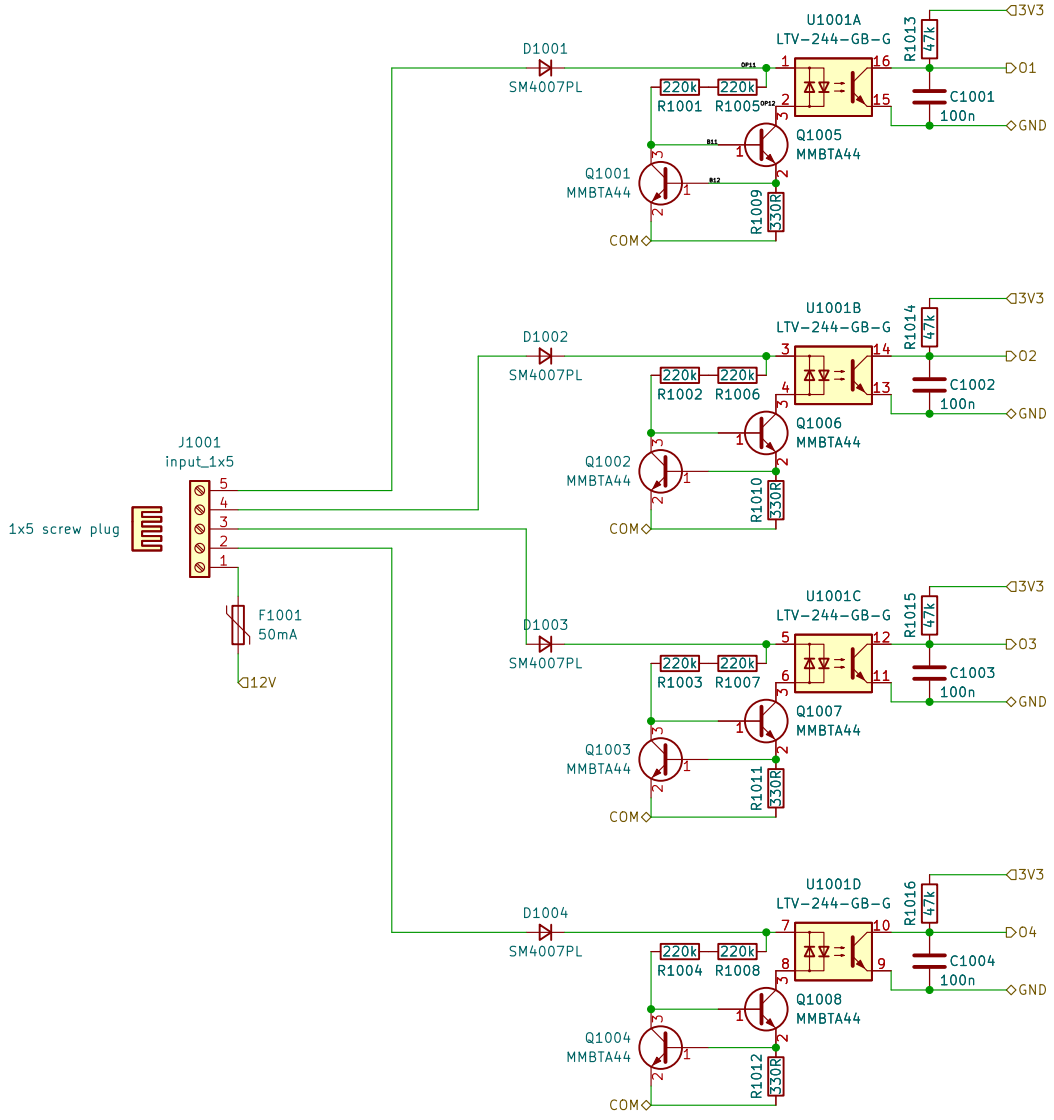


makerspace.lt

Sheet: /input1/

File: _input2.kicad_sch

**Title: WormControl-Input32-InputBoard**

| | | |
|---|---|---|
| Size: A4 | Date: 2026-03-19 | Rev: 0.3 |
| KiCad E.D.A. eeschema 6.0.11+dfsg-1 | | Id: 20/10 |