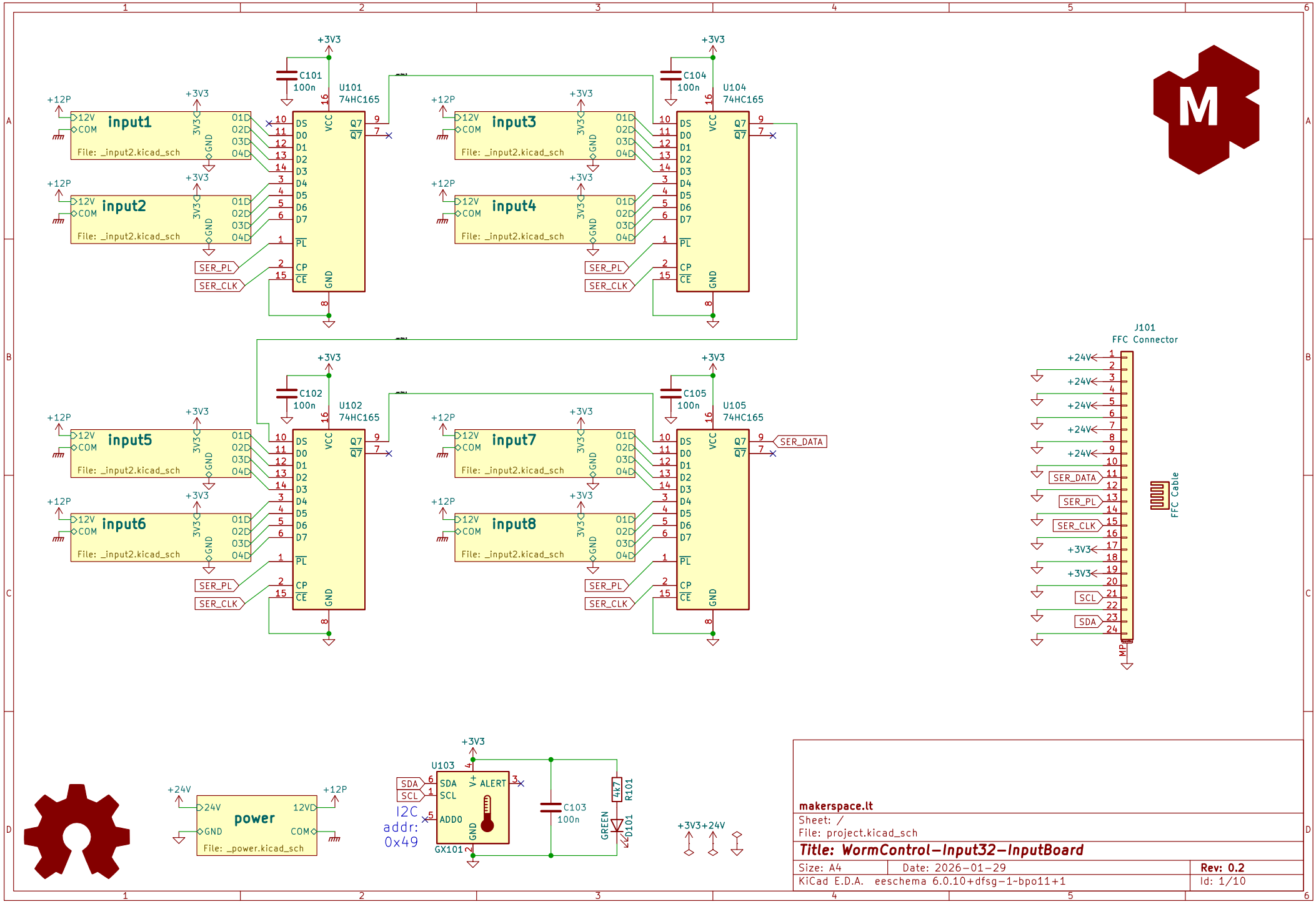
input1
input2
input3
input4
input5
input6
input7
input8
File: _input2.kicad_sch
U101 74HC165
U102 74HC165
U104 74HC165
U105 74HC165
C101 100n
C102 100n
C104 100n
C105 100n
+3V3
+12P
SER_PL
SER_CLK
SER_DATA
J101
FFC Connector
FFC Cable
+24V
SCL
SDA
power
File: _power.kicad_sch
U103
GX101
I2C addr: 0x49
C103 100n
R101 4k7
D101 GREEN
makerspace.lt
Sheet: /
File: project.kicad_sch
Title: WormControl-Input32-InputBoard
Size: A4
Date: 2026-01-29
Rev: 0.2
KiCad E.D.A. eeschema 6.0.10+dfsg-1~bpo11+1
Id: 1/10

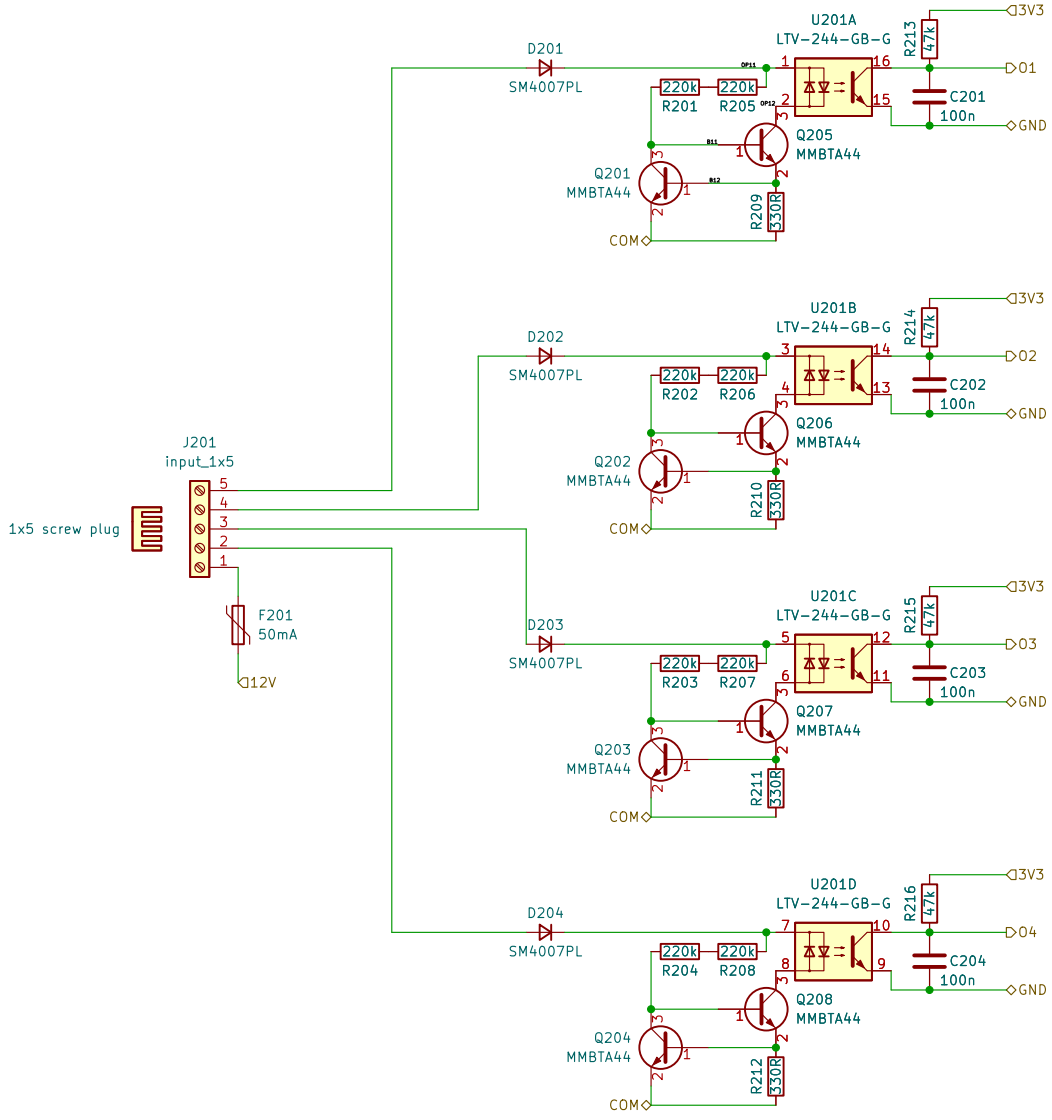

Sheet: /input3/
File: _input2.kicad_sch

Title:

Size: A4	Date:	Rev:
KiCad E.D.A. eeschema 6.0.10+dfsg-1~bpo11+1		Id: 2/10

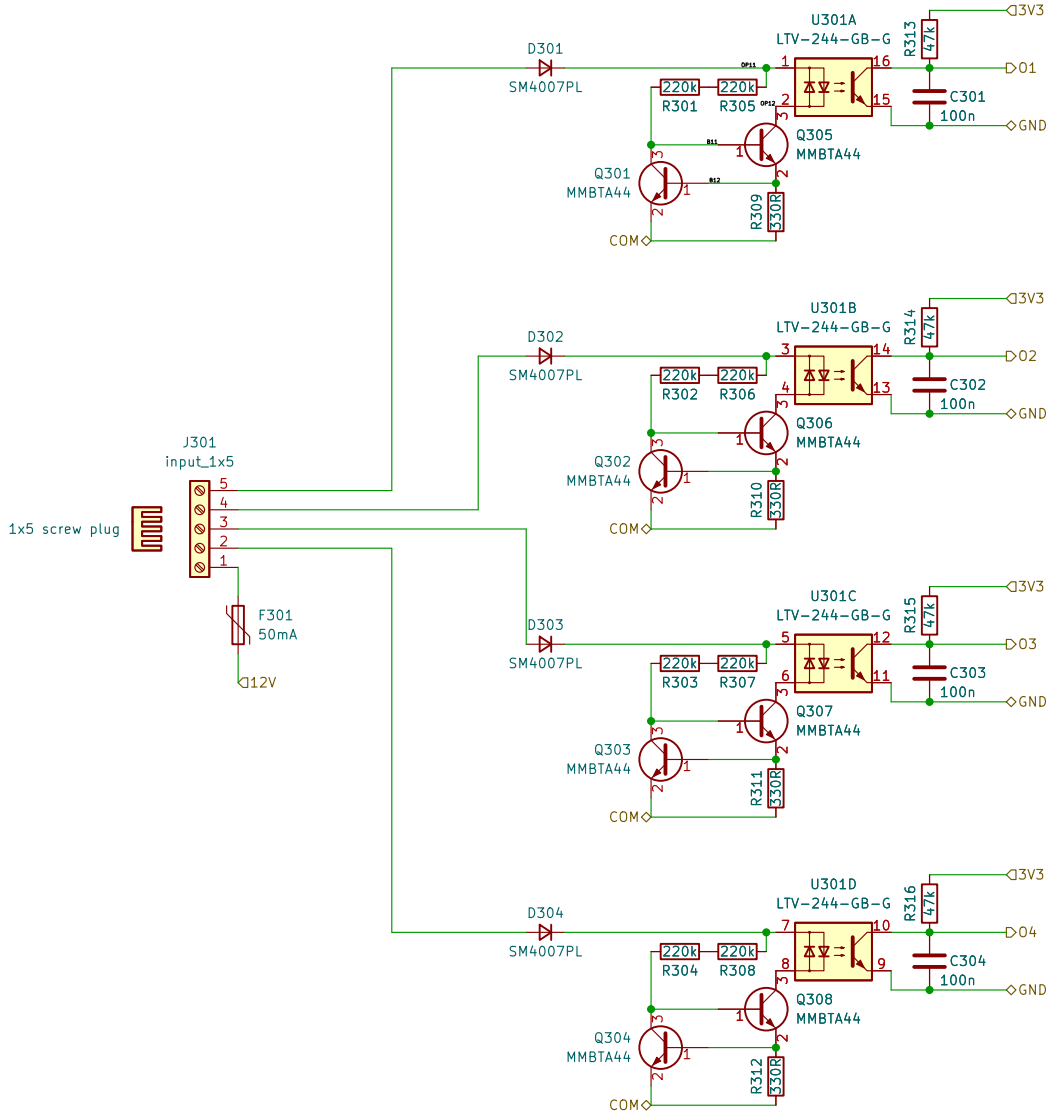

Sheet: /input4/
File: _input2.kicad_sch

Title:

Size: A4	Date:	**Rev:**
KiCad E.D.A. eeschema 6.0.10+dfsg-1~bpo11+1		Id: 3/10

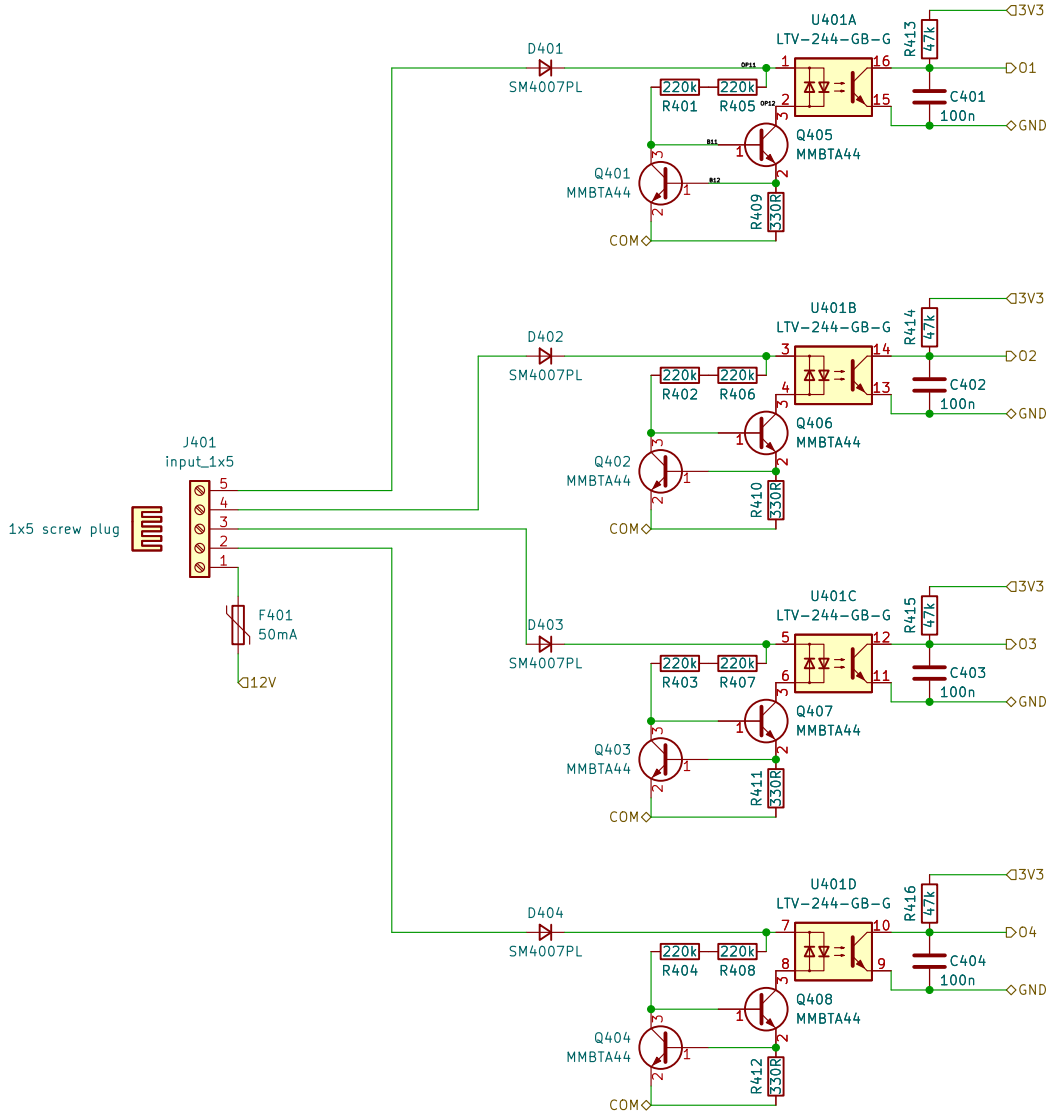

Sheet: /input6/
File: _input2.kicad_sch

Title:

Size: A4	Date:	**Rev:**
KiCad E.D.A. eeschema 6.0.10+dfsg-1~bpo11+1		Id: 4/10

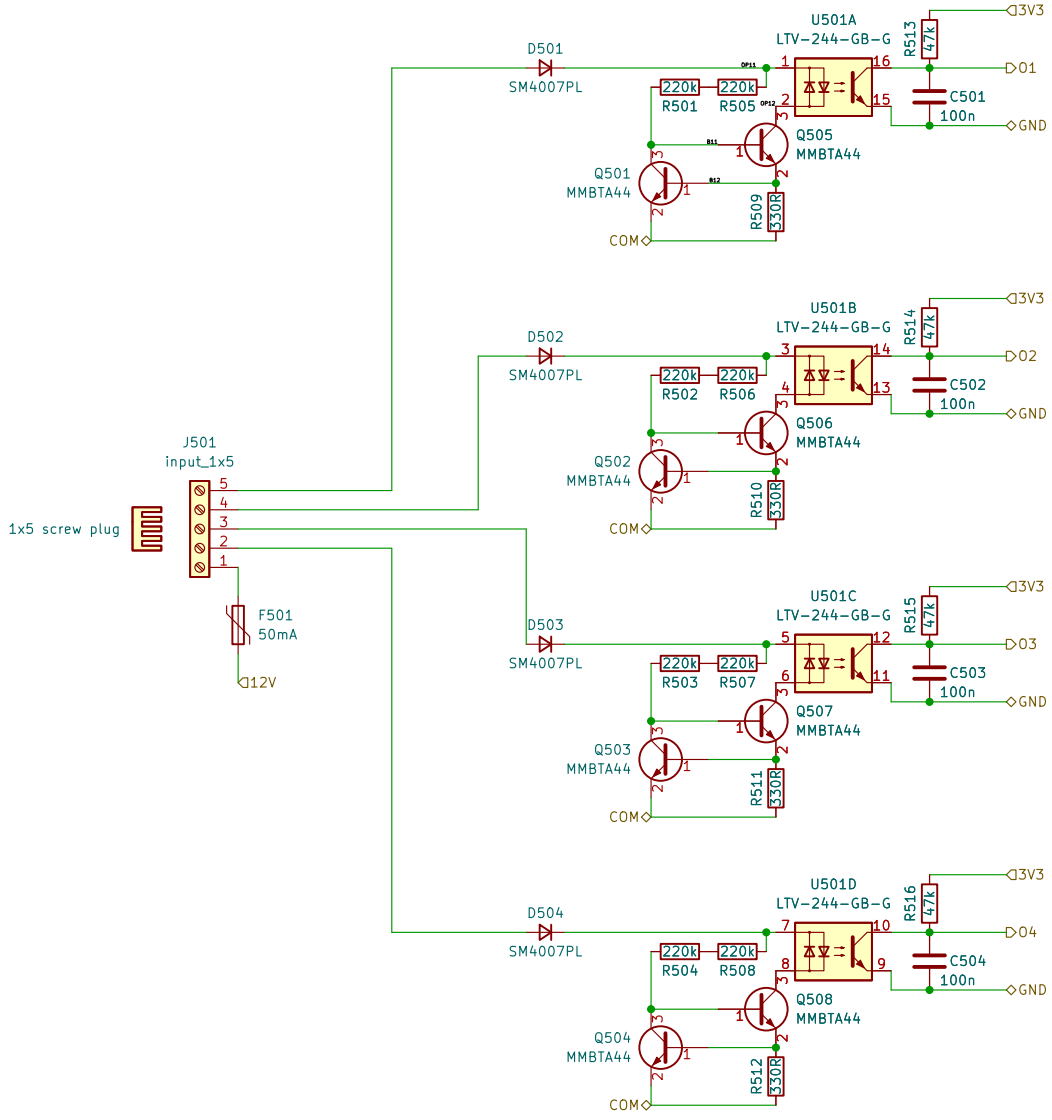

Sheet: /input2/
File: _input2.kicad_sch

Title:

Size: A4	Date:	**Rev:**
KiCad E.D.A. eeschema 6.0.10+dfsg-1~bpo11+1		Id: 5/10

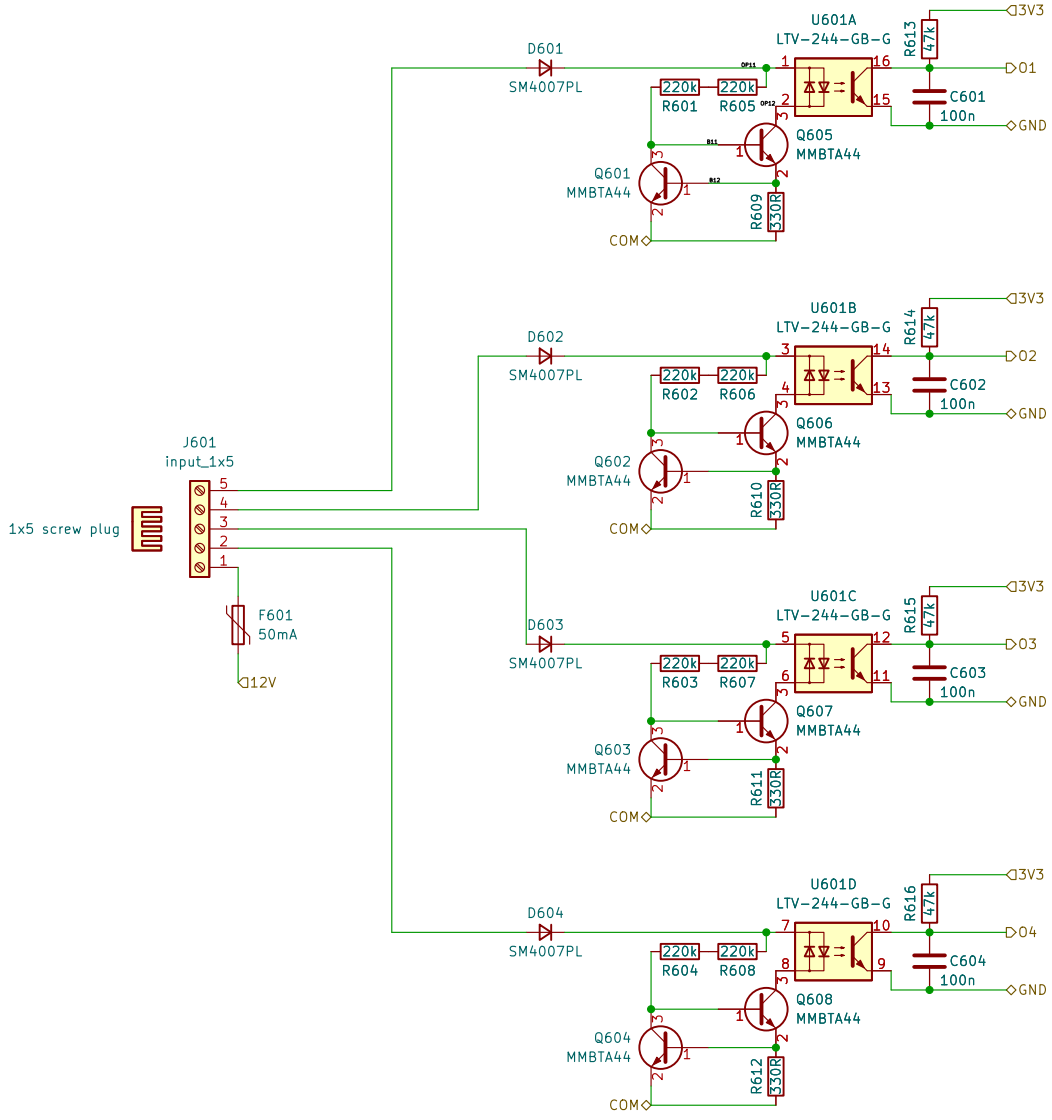

Sheet: /input5/
File: _input2.kicad_sch

Title:

Size: A4	Date:	**Rev:**
KiCad E.D.A. eeschema 6.0.10+dfsg-1~bpo11+1		Id: 6/10

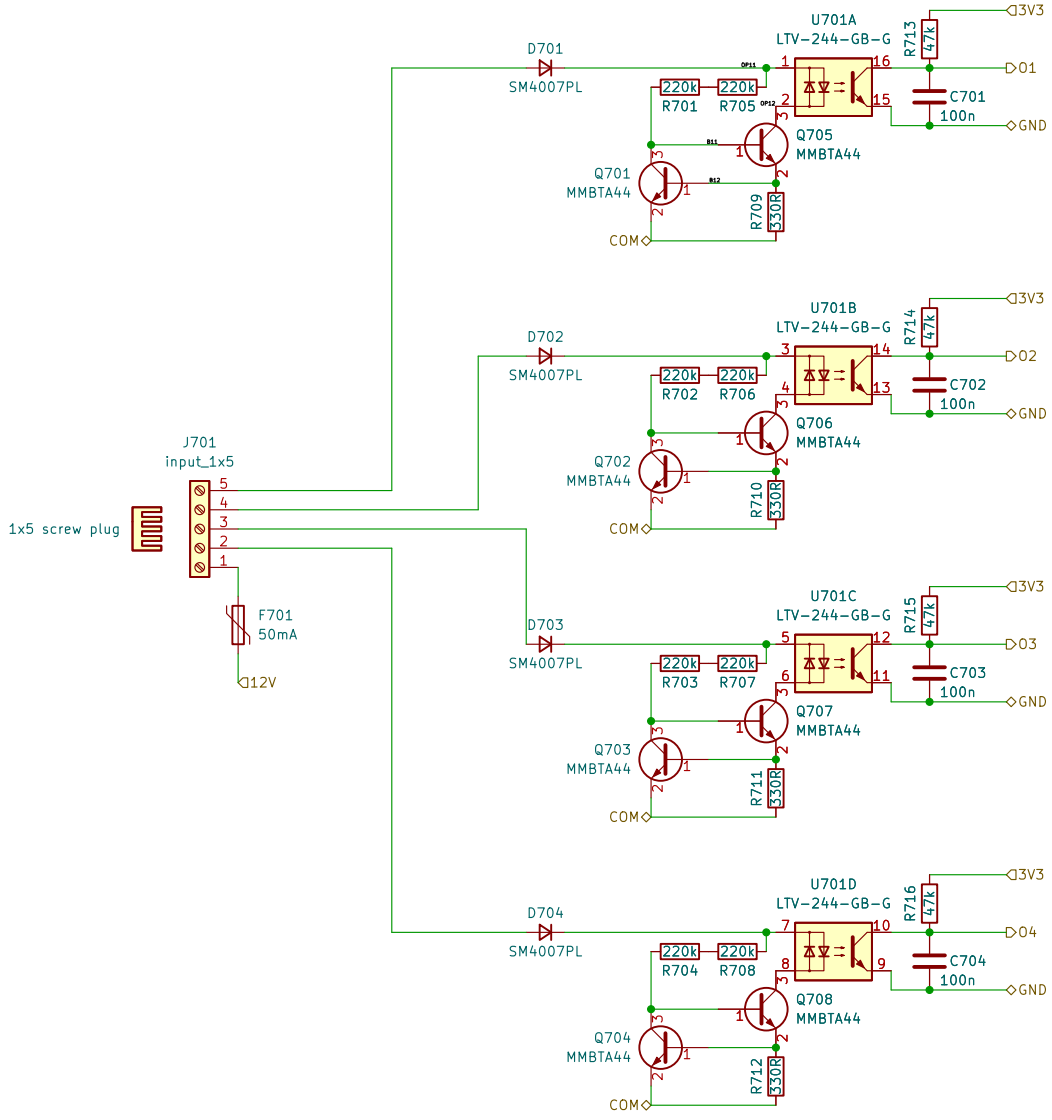

Sheet: /input7/
File: _input2.kicad_sch

Title:

Size: A4	Date:	**Rev:**
KiCad E.D.A. eeschema 6.0.10+dfsg-1~bpo11+1		Id: 7/10

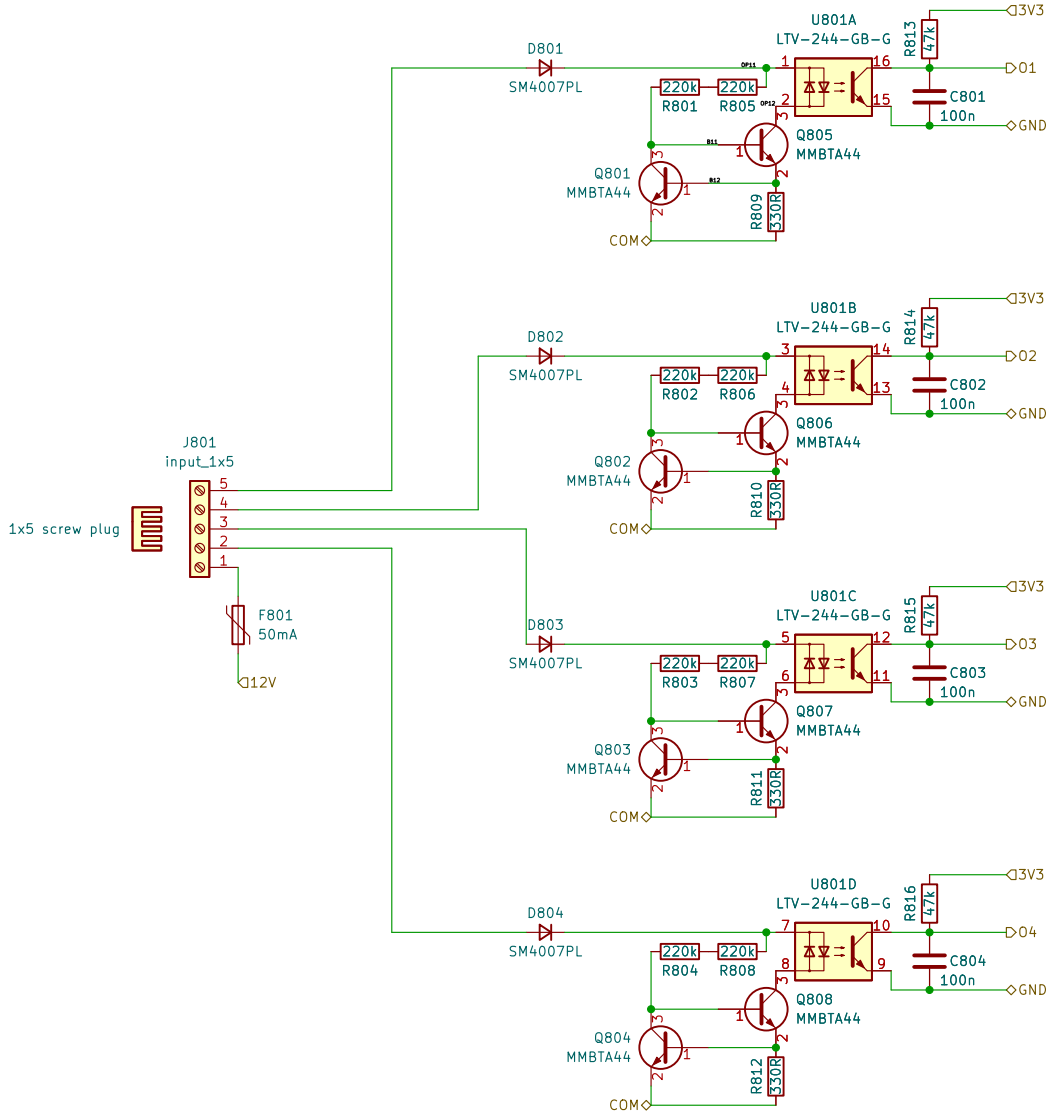

Sheet: /input8/
File: _input2.kicad_sch

Title:

Size: A4	Date:	Rev:
KiCad E.D.A. eeschema 6.0.10+dfsg-1~bpo11+1		Id: 8/10

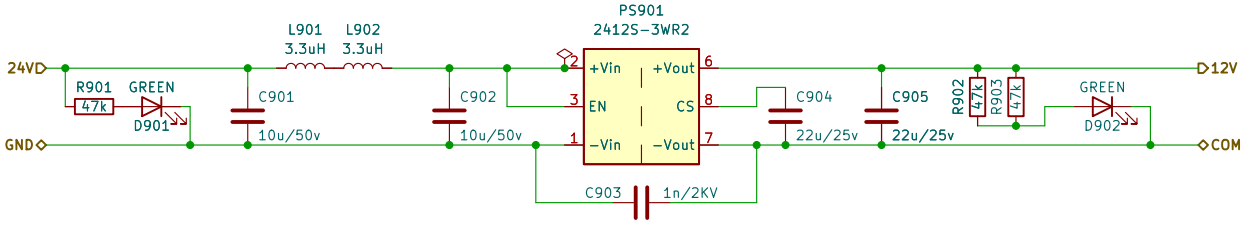

Sheet: /power/
File: _power.kicad_sch

Title:

Size: A4	Date:	Rev:
KiCad E.D.A. eeschema 6.0.10+dfsg-1~bpo11+1		Id: 10/10

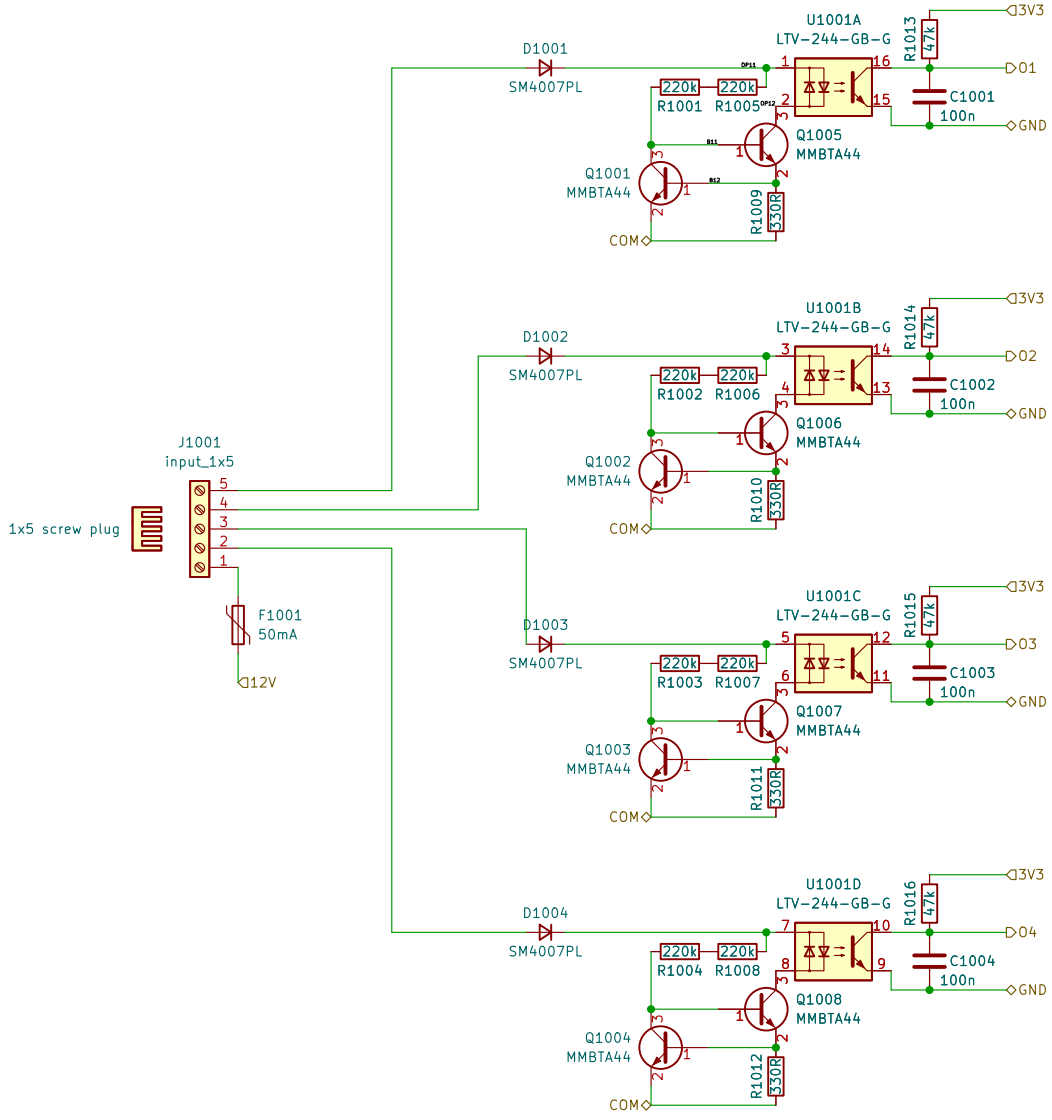

Sheet: /input1/
File: _input2.kicad_sch

Title:

Size: A4	Date:	**Rev:**
KiCad E.D.A. eeschema 6.0.10+dfsg-1~bpo11+1		Id: 20/10