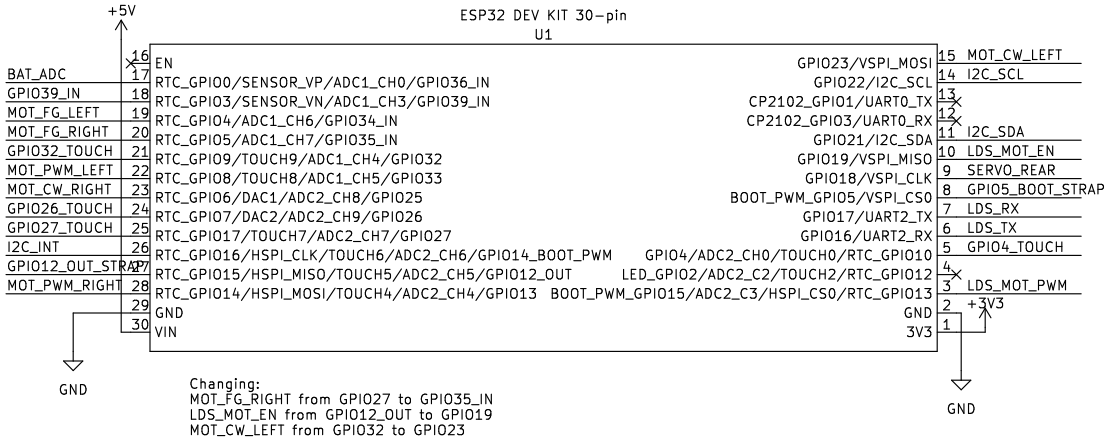

Changing:
MOT_FG_RIGHT from GPIO27 to GPIO35_IN
LDS_MOT_EN from GPIO12_OUT to GPIO19
MOT_CW_LEFT from GPIO32 to GPIO23

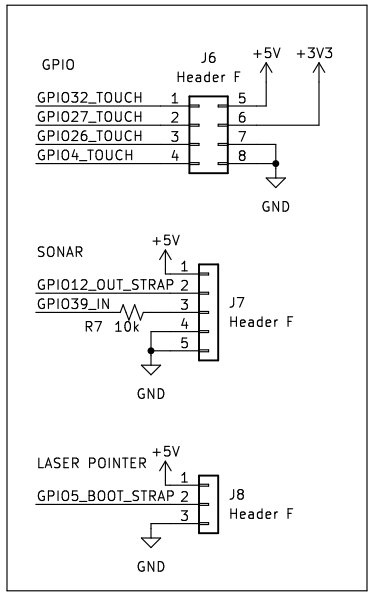

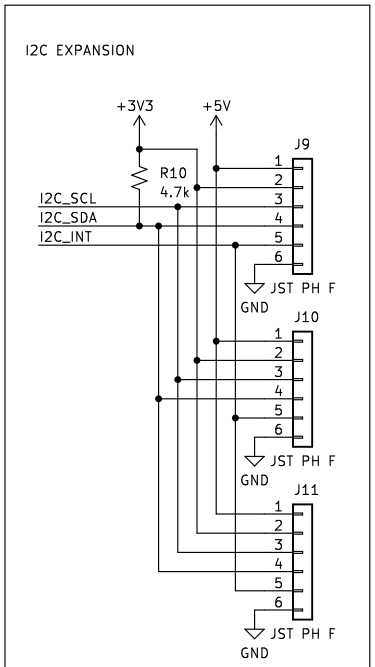

Motors CHR-GM25-BLDC2418
Type BLDC
Voltage 24V, I/O 5V
Diameter 25mm
Weight 69g
Rated RPM 190
Rated torque 1.1Kg*cm
Max power 2.5W
Stall torque 3.5Kg*cm
Stall current 0.35A
https://www.aliexpress.us/item/2251832633601682.html

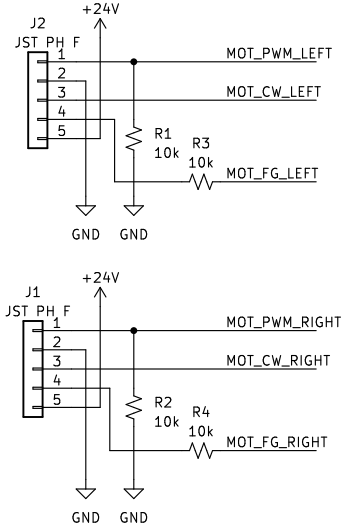

Laser Distance Sensor
YDLidar X4

VCC 5V
TX all I/O 3.3V
RX
GND
M_SCTR speed
DEV_EN N/C
M_EN
N/C

https://www.ydlidar.com/

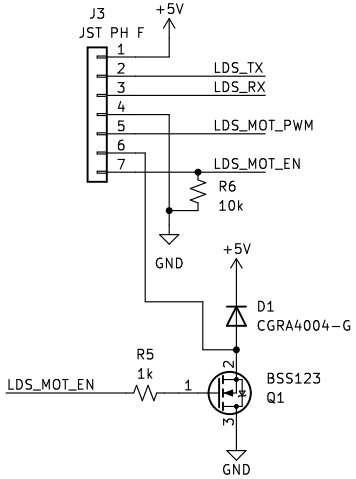

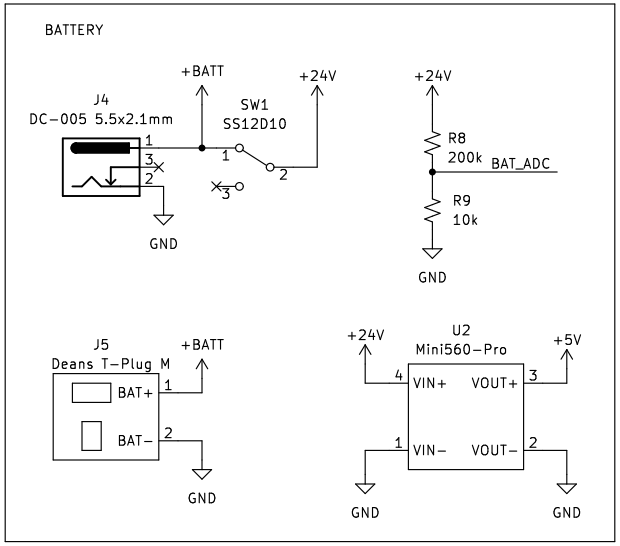

H1 MountingHole
H2 MountingHole
H3 MountingHole
H4 MountingHole

makerspet.com
Maker's Pet
Sheet: /
File: esp32_breakout.kicad_sch

Title: Maker's Pet ESP32 Breakout

Size: USLetter	Date: 2023-11-15	**Rev:**
KiCad E.D.A. kicad 7.0.9		Id: 1/1