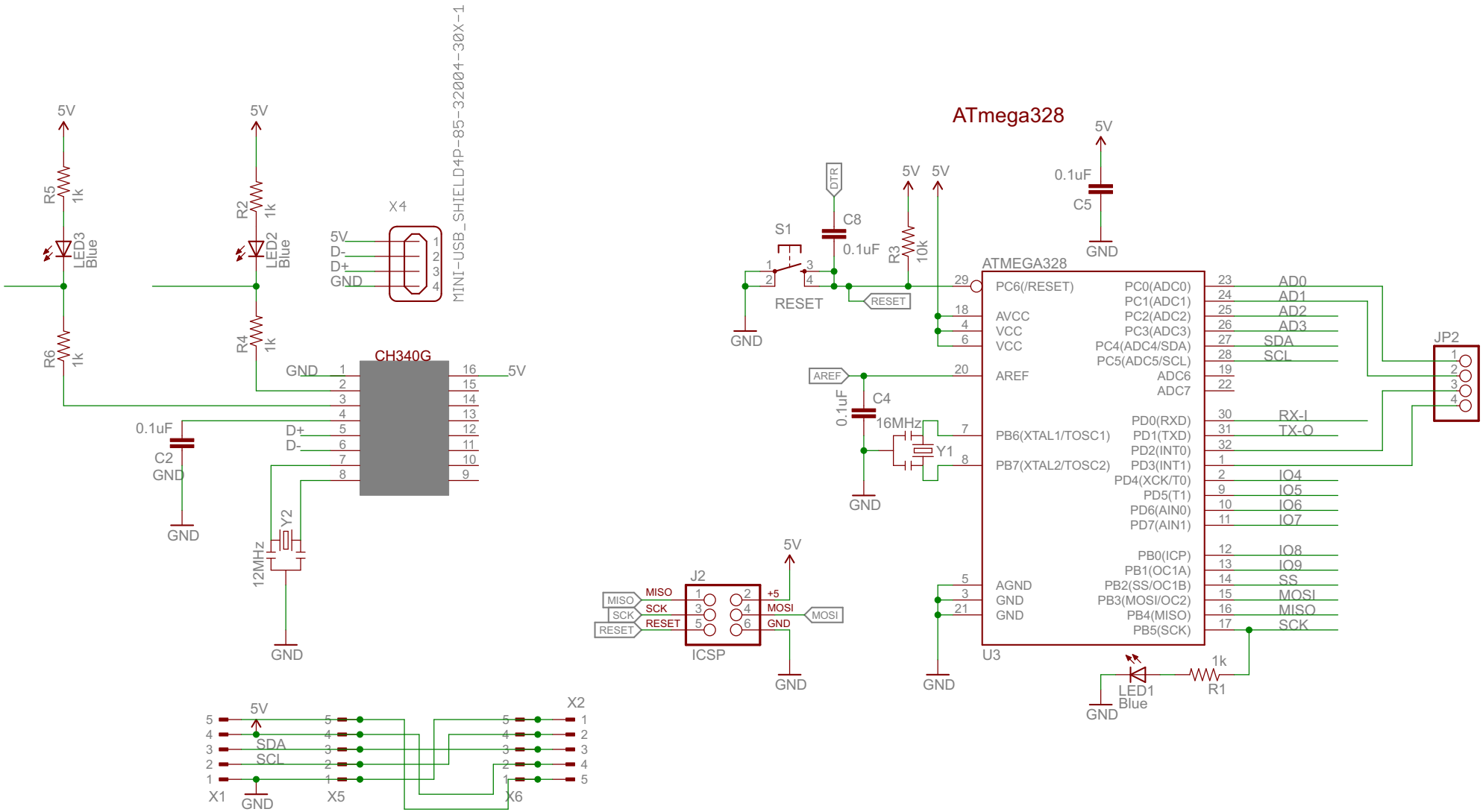
ATmega328
5V
R5 1k
LED3 Blue
R6 1k
R2 1k
LED2 Blue
R4 1k
X4
MINI-USB_SHIELD4P-85-32004-30X-1
5V
D-
D+
GND
CH340G
GND
5V
D+
D-
0.1uF
C2
GND
Y2
12MHz
GND
S1
RESET
C8
0.1uF
DTR
R3 10k
RESET
GND
AREF
C4
0.1uF
16MHz
Y1
GND
ATMEGA328
PC6(/RESET)
AVCC
VCC
VCC
AREF
PB6(XTAL1/TOSC1)
PB7(XTAL2/TOSC2)
AGND
GND
GND
PC0(ADC0)
PC1(ADC1)
PC2(ADC2)
PC3(ADC3)
PC4(ADC4/SDA)
PC5(ADC5/SCL)
ADC6
ADC7
PD0(RXD)
PD1(TXD)
PD2(INT0)
PD3(INT1)
PD4(XCK/T0)
PD5(T1)
PD6(AIN0)
PD7(AIN1)
PB0(ICP)
PB1(OC1A)
PB2(SS/OC1B)
PB3(MOSI/OC2)
PB4(MISO)
PB5(SCK)
U3
AD0
AD1
AD2
AD3
SDA
SCL
RX-I
TX-O
IO4
IO5
IO6
IO7
IO8
IO9
SS
MOSI
MISO
SCK
JP2
5V
0.1uF
C5
GND
J2
MISO
SCK
RESET
+5
MOSI
GND
ICSP
GND
LED1 Blue
1k
R1
GND
X1
X5
X6
X2
SDA
SCL
GND